YAMAHA

YFZ450S

5TG2-AE1

SERVICE MANUAL

EBS00000

YFZ450S
SERVICE MANUAL

First Edition, April 2003

EBS00002

NOTICE

This manual was produced by the Yamaha Motor Company primarily for use by Yamaha dealers and their qualified mechanics. It is not possible to include all the knowledge of a mechanic in one manual, so it is assumed that anyone who uses this book to perform maintenance and repairs on Yamaha machine has a basic understanding of the mechanical ideas and the procedures of machine repair. Repairs attempted by anyone without this knowledge are likely to render the machine unsafe and unfit for use.

Yamaha Motor Company, Ltd. is continually striving to improve all its models. Modifications and significant changes in specifications or procedures will be forwarded to all authorized Yamaha dealers and will appear in future editions of this manual where applicable.

NOTE:

Designs and specifications are subject to change without notice.

EBS00003

IMPORTANT INFORMATION

Particularly important information is distinguished in this manual by the following notations.

⚠	The Safety Alert Symbol means ATTENTION! BECOME ALERT! YOUR SAFETY IS INVOLVED!
⚠ WARNING	Failure to follow WARNING instructions could result in severe injury or death to the machine operator, a bystander or a person checking or repairing the machine.
CAUTION:	A CAUTION indicates special precautions that must be taken to avoid damage to the machine.
NOTE:	A NOTE provides key information to make procedures easier or clearer.

EBS00004

HOW TO USE THIS MANUAL

MANUAL ORGANIZATION

This manual consists of chapters for the main categories of subjects. (See “symbols”)
1st title ①: This is the title of the chapter with its symbol in the upper right corner of each page.
2nd title ②: This title indicates the section of the chapter and only appears on the first page of each section. It is located in the upper left corner of the page.
3rd title ③: This title indicates a sub-section that is followed by step-by-step procedures accompanied by corresponding illustrations.

EXPLODED DIAGRAMS

To help identify parts and clarify procedure steps, there are exploded diagrams at the start of each removal and disassembly section.

1. An easy-to-see exploded diagram ④ is provided for removal and disassembly jobs.
2. Numbers ⑤ are given in the order of the jobs in the exploded diagram. A number that is enclosed by a circle indicates a disassembly step.
3. An explanation of jobs and notes is presented in an easy-to-read way by the use of symbol marks ⑥. The meanings of the symbol marks are given on the next page.
4. A job instruction chart ⑦ accompanies the exploded diagram, providing the order of jobs, names of parts, notes in jobs, etc.
5. For jobs requiring more information, the step-by-step format supplements ⑧ are given in addition to the exploded diagram and the job instruction chart.

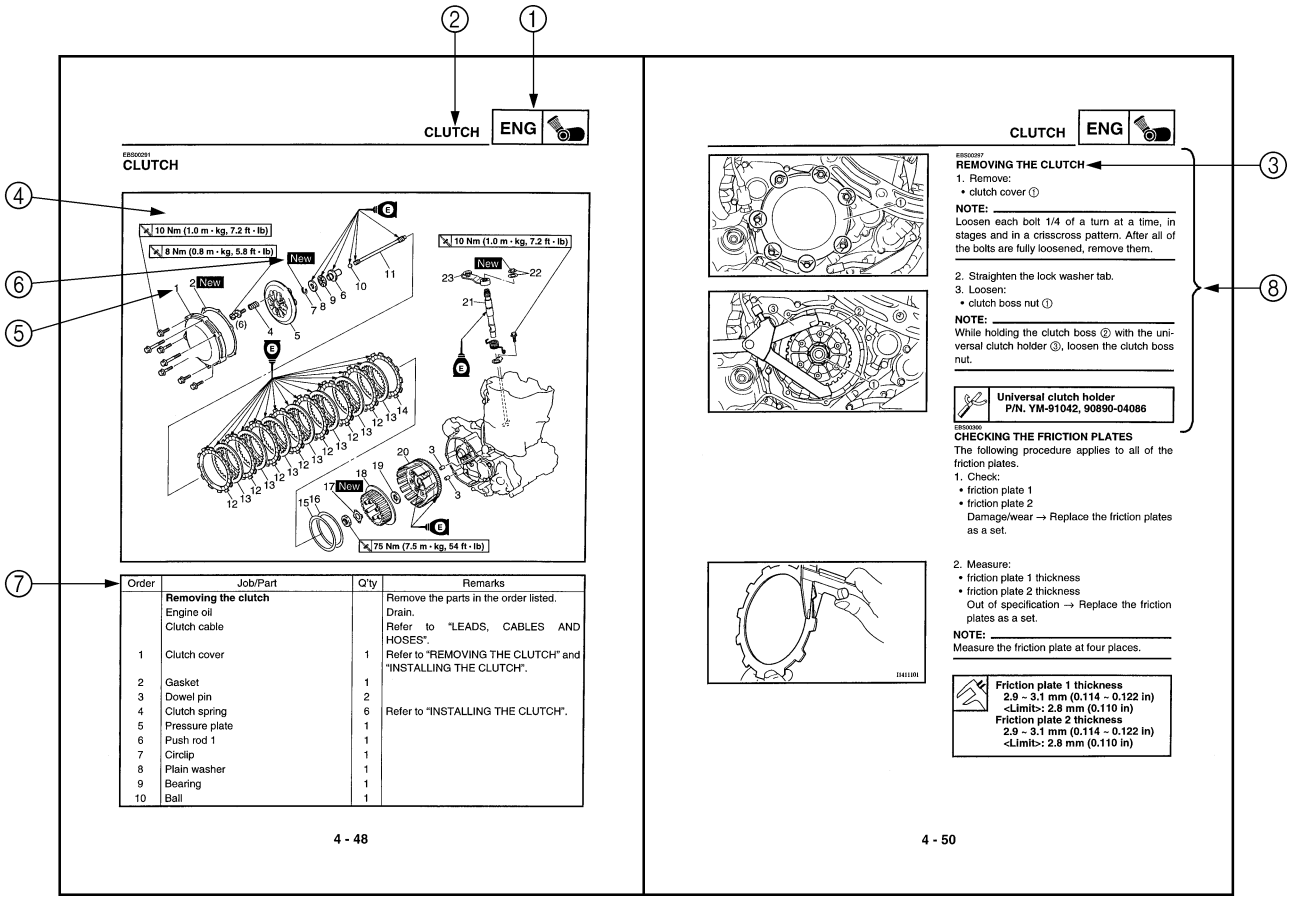

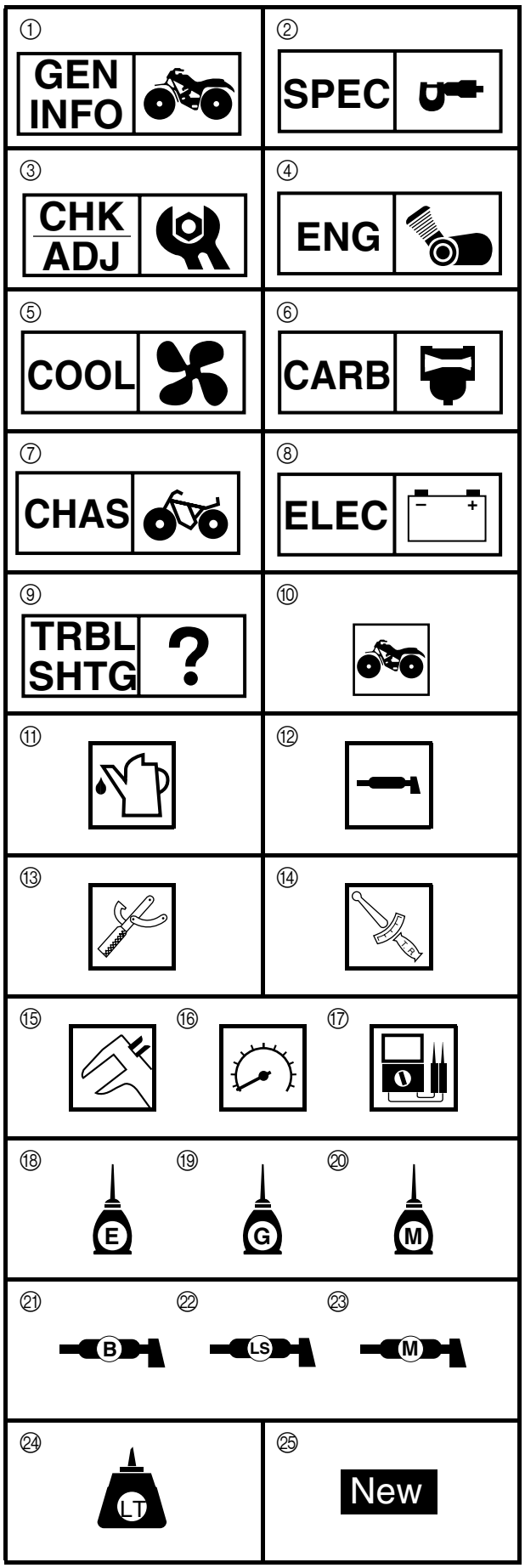

EBS00006

SYMBOLS

The following symbols are not relevant to every machine.

Symbols ① to ⑨ indicate the subject of each chapter.

① General information
② Specifications
③ Periodic checks and adjustments
④ Engine
⑤ Cooling system
⑥ Carburetor
⑦ Chassis
⑧ Electrical
⑨ Troubleshooting

Symbols ⑩ to ⑰ indicate the following

⑩ Serviceable with engine mounted
⑪ Filling fluid
⑫ Lubricant
⑬ Special tool
⑭ Torque
⑮ Wear limit, clearance
⑯ Engine speed
⑰ Electrical data (Ω, V, A)

Symbols ⑱ to ㉔ in the exploded diagrams indicate the types of lubricants and lubrication points.

⑱ Apply engine oil
⑲ Apply gear oil
⑳ Apply molybdenum disulfide oil
㉑ Apply wheel bearing grease
㉒ Apply lithium-soap-based grease
㉓ Apply molybdenum disulfide grease

Symbols ㉔ to ㉕ in the exploded diagrams indicate where to apply a locking agent ㉔ and when to install a new part ㉕.

㉔ Apply the locking agent (LOCTITE®)
㉕ Replace

EBS00008

TABLE OF CONTENTS

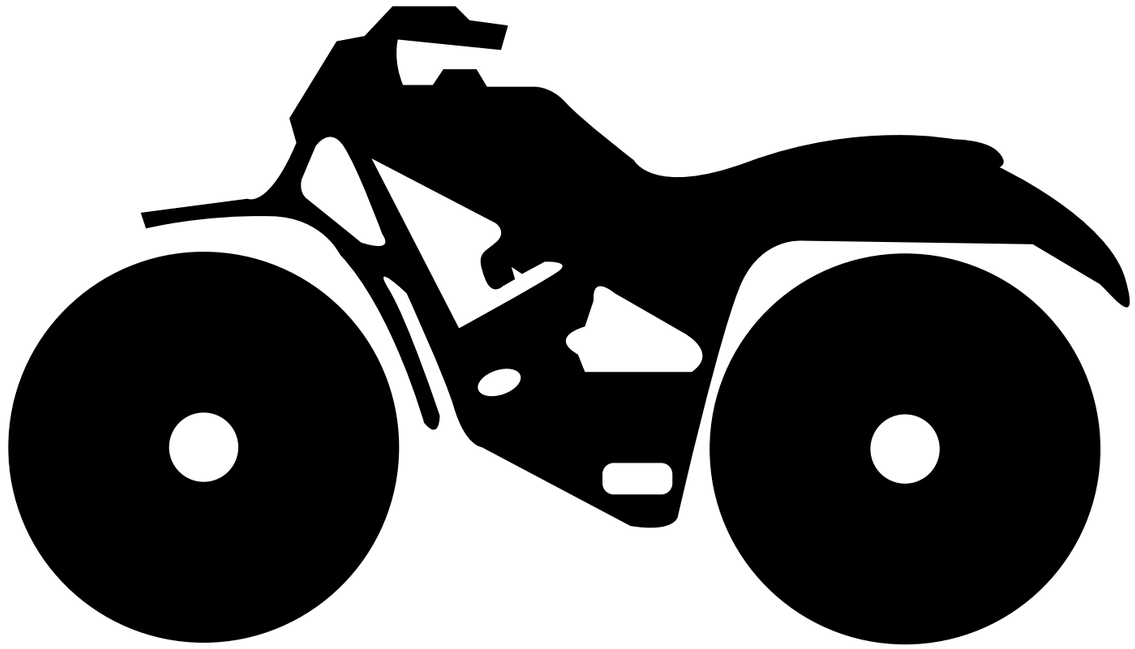

GEN INFO

1

CHAPTER 1
GENERAL INFORMATION

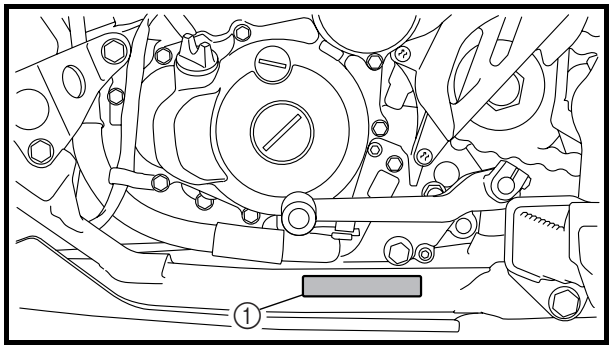

EBS00009

GENERAL INFORMATION

MACHINE IDENTIFICATION

EBS00010

VEHICLE IDENTIFICATION NUMBER

The vehicle identification number ① is stamped into the left side of the frame.

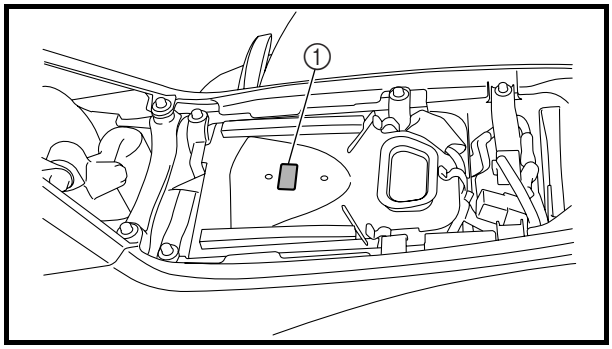

EBS00011

MODEL LABEL

The model label ① is affixed to the air filter case cover. This information will be needed to order spare parts.

EBS00013

IMPORTANT INFORMATION

PREPARATION FOR REMOVAL AND DISASSEMBLY

1. Before removal and disassembly remove all dirt, mud, dust and foreign material.
2. Use only the proper tools and cleaning equipment.
   Refer to “SPECIAL TOOLS”.
3. When disassembling always keep mated parts together. This includes gears, cylinders, pistons and other parts that have been “mated” through normal wear. Mated parts must always be reused or replaced as an assembly.
4. During disassembly, clean all of the parts and place them in trays in the order of disassembly. This will speed up assembly and allow for the correct installation of all parts.
5. Keep all parts away from any source of fire.

EBS00014

REPLACEMENT PARTS

1. Use only genuine Yamaha parts for all replacements. Use oil and grease recommended by Yamaha for all lubrication jobs. Other brands may be similar in function and appearance, but inferior in quality.

EBS00015

GASKETS, OIL SEALS AND O-RINGS

1. When overhauling the engine, replace all gaskets, seals and O-rings. All gasket surfaces, oil seal lips and O-rings must be cleaned.
2. During reassembly properly oil all mating parts and bearings, and lubricate the oil seal lips with grease.

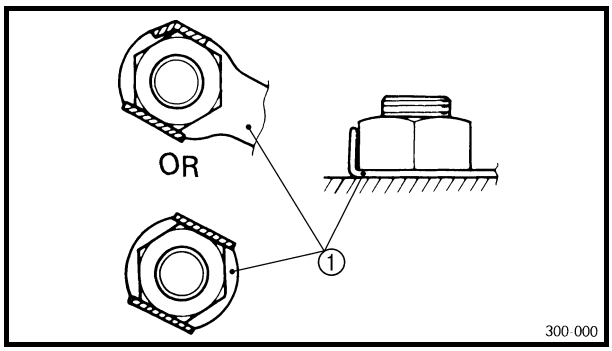

EBS00016
LOCK WASHERS/PLATES AND COTTER PINS

After removal, replace all lock washers/plates ① and cotter pins. After the bolt or nut has been tightened to specification, bend the lock tabs along a flat of the bolt or nut.

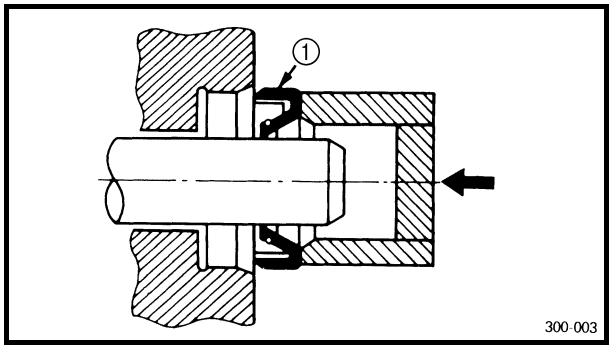

EBS00017
BEARINGS AND OIL SEALS

Install bearings and oil seals so that the manufacturer's marks or numbers are visible. When installing oil seals, lubricate the oil seal lips with a light coat of lithium-soap-based grease. Oil bearings liberally when installing, if appropriate.

① Oil seal

CAUTION:

Do not spin the bearing with compressed air because this will damage the bearing surfaces.

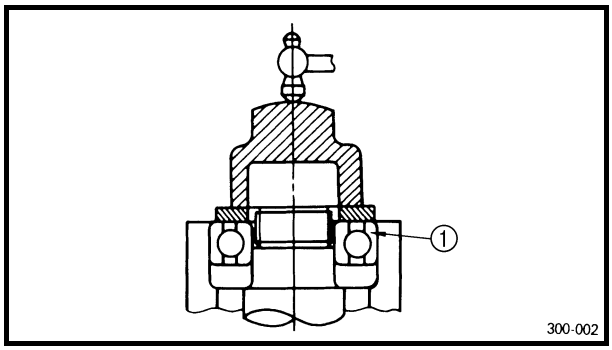

① Bearing

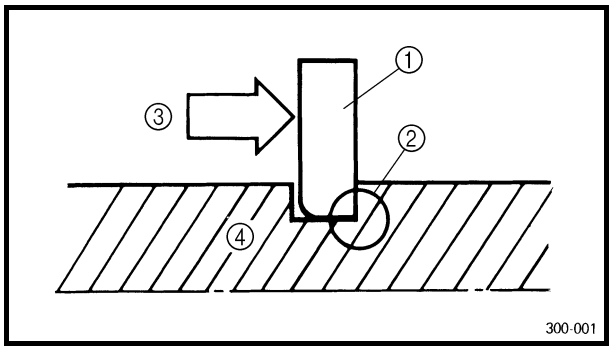

EBS00018
CIRCLIPS

Before reassembly, check all circlips carefully and replace damaged or distorted circlips. Always replace piston pin clips after one use. When installing a circlip ①, make sure the sharp-edged corner ② is positioned opposite the thrust ③ that the circlip receives.

④ Shaft

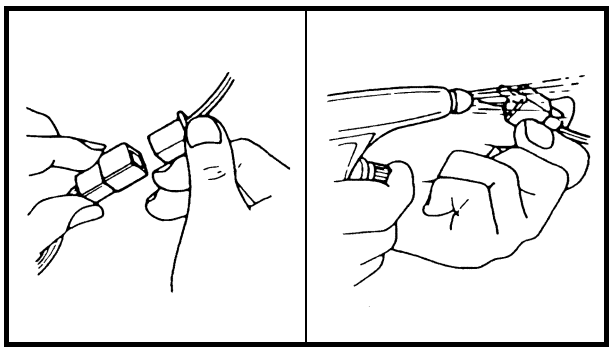

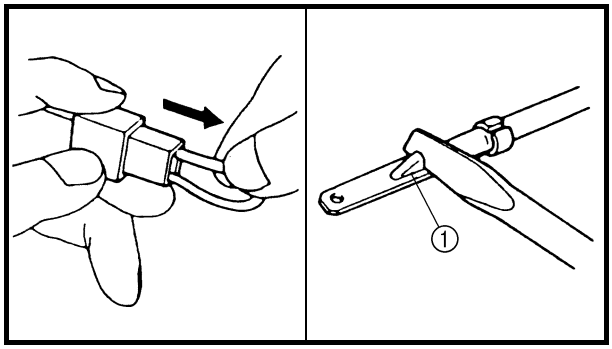

EBS00019

CHECKING THE CONNECTIONS

Check the leads, couplers, and connectors for stains, rust, moisture, etc.

1. Disconnect:
   - lead
   - coupler
   - connector
2. Check:
   - lead
   - coupler
   - connector

     Moisture → Dry with an air blower.
     Rust/stains → Connect and disconnect several times.
3. Check:
   - all connections

     Loose connection → Connect properly.

NOTE:

If the pin ① on the terminal is flattened, bend it up.

4. Connect:
   - lead
   - coupler
   - connector

NOTE:

Make sure all connections are tight.

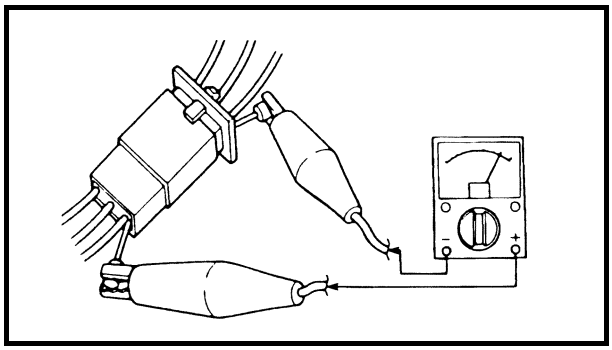

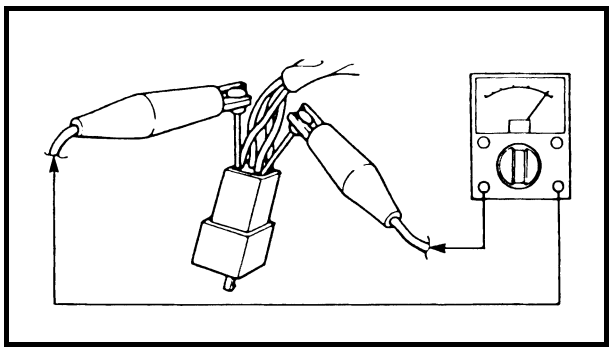

5. Check:
   - continuity (with the pocket tester)

Pocket tester
P/N. YU-03112-C, 90890-03112

NOTE:

- If there is no continuity, clean the terminals.
- When checking the wire harness, perform steps (1) to (3).
- As a quick remedy, use a contact revitalizer available at most part stores.

EBS00021

SPECIAL TOOLS

The following special tools are necessary for complete and accurate tune-up and assembly. Use only the appropriate special tools; this will help prevent damage caused by the use of inappropriate tools or improvised techniques. Special tools may differ by shape and part number from country to country. In such a case, two types are provided.
When placing an order, refer to the list provided below to avoid any mistakes.
For US and CDN
P/N. YM-, YU-, YS-, YK-, ACC-
Except for US and CDN
P/N. 90890-

Tool No.	Tool name/Function	Illustration
90890-01135 YU-01135-A	Crankcase separating tool This tool is used to separate the crankcase.	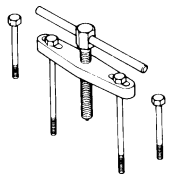
Pot 90890-01274 Bolt 90890-01275	Crankshaft installer pot Crankshaft installer bolt These tools are used to install the crankshaft.	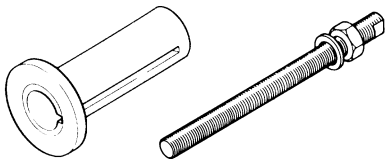
YU-90050	Crankshaft installer set These tools are used to install the crankshaft.	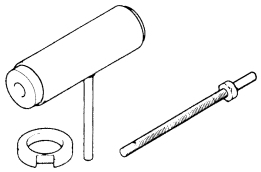
Adapter 90890-01278 YM-90063 Spacer 90890-04081 YM-91044	Adapter Spacer (crankshaft installer) These tools are used to install the crankshaft.	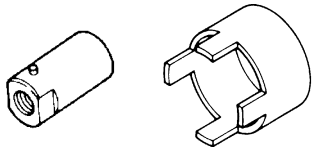
90890-01304 YU-01304	Piston pin puller This tool is used to remove the piston pin.	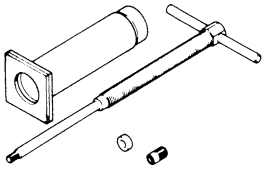
90890-01325 YU-24460-01	Radiator cap tester This tool is used to check the cooling system.	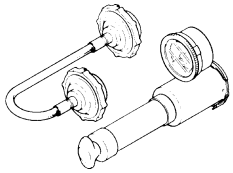

Tool No.	Tool name/Function	Illustration
90890-01352 YU-33984	Radiator cap tester adapter This tool is used to check the cooling system.	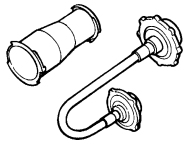
90890-01327 YM-01327	Damper rod holder (30 mm) This tool is needed to loosen and tighten the steering stem bearing retainer.	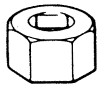
90890-01443 YU-33975	Steering nut wrench This tool is needed to loosen and tighten the front shock absorber and rear shock absorber locknuts.	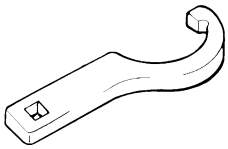
90890-01474 YM-01474	Ball joint remover/installer set These tools are used to removing or installing the ball joints.	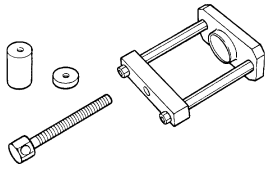
90890-01480 YM-01480	Ball joint remover/installer attachment set These tools are used to removing or installing the ball joints.	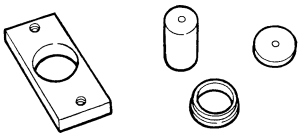
90890-01701 YS-01880-A	Sheave holder This tool is needed to hold the A.C. magneto rotor when loosen or tighten the A.C. magneto rotor nut.	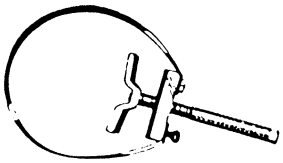
90890-03112 YU-03112-C	Pocket tester This instrument is needed for checking the electrical system.	
90890-03141 YM-33277-A	Timing light This tool is necessary for checking ignition timing.	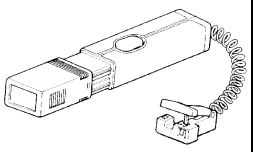 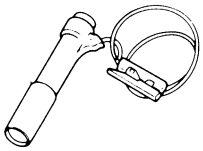

Tool No.	Tool name/Function	Illustration
Compressor 90890-04019 YM-04019 Attachment 90890-04114 YM-04114	Valve spring compressor Valve spring compressor attachment This tool is needed to remove and install the valve assemblies.	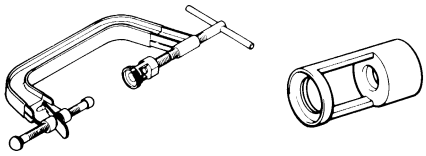
90890-04086 YM-91042	Universal clutch holder This tool is needed to hold the clutch carrier when removing or installing the carrier nut.	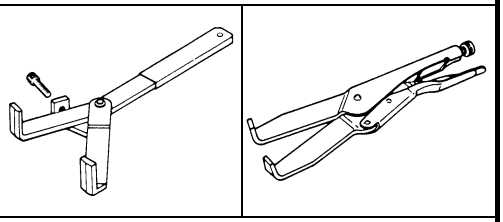
90890-04097 YM-04097 90890-04116 YM-04116	Valve guide remover (ø 5) Valve guide remover (ø 4.5) This tool is needed to remove and install the valve guides.	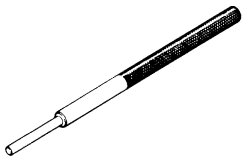
90890-04098 YM-04098 90890-04117 YM-04117	Valve guide installer (ø 5) Valve guide installer (ø 4.5) This tool is needed to install the valve guides.	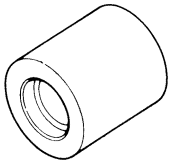
90890-04099 YM-04099 90890-04118 YM-04118	Valve guide reamer (ø 5) Valve guide reamer (ø 4.5) This tool is needed to rebore the new valve guides.	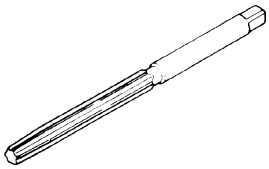
90890-04101	Valve lapper This tool is needed to remove and install the valve lifters.	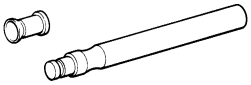
90890-04142 YM-04142	Rotor puller These tools are needed to remove the A.C. magneto rotor.	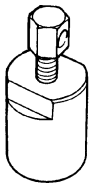
90890-06588	PTT wrench 46 This tool is needed to loosen or tighten the rear axle nut.	

Tool No.	Tool name/Function	Illustration
YM-37134	Axle nut wrench (46 mm) This tool is needed to loosen or tighten the rear axle nut.	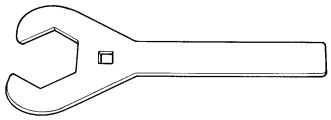
90890-06754	Ignition checker This instrument is necessary for checking the ignition system components.	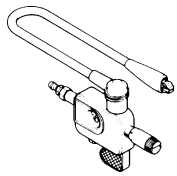
YM-34487	Dynamic spark tester This instrument is necessary for checking the ignition system components.	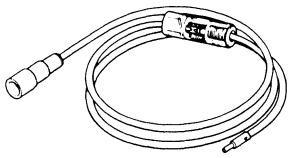
Bond 90890-85505 Sealant ACC-11001-05-01	Yamaha bond No. 1215 Sealant (Quick Gasket®) This sealant (bond) is used on crankcase mating surfaces, etc.	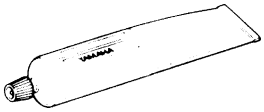

SPEC 2

CHAPTER 2
SPECIFICATIONS

EBS01001

SPECIFICATIONS

GENERAL SPECIFICATIONS

Item	Standard
Model code	5TG1 (For Oceania) 5TG2 (For CDN) 5TG3 (For Europe)
Dimensions	
Overall length	1,840 mm (72.4 in)
Overall width	1,170 mm (46.1 in)
Overall height	1,090 mm (42.9 in)
Seat height	800 mm (31.5 in)
Wheelbase	1,280 mm (50.4 in)
Minimum ground clearance	255 mm (10.04 in)
Minimum turning radius	3,500 mm (137.8 in)
Basic weight	
With oil and full fuel tank	169 kg (373 lb)
Engine	
Engine type	Liquid-cooled 4-stroke, DOHC
Cylinder arrangement	Forward-inclined single cylinder
Displacement	439 cm^3 (26.79 cu in)
Bore × stroke	95.0 × 62.0 mm (3.74 × 2.44 in)
Compression ratio	11.9:1
Starting system	Electric starter
Lubrication system	Dry sump
Oil type or grade Engine oil For CDN 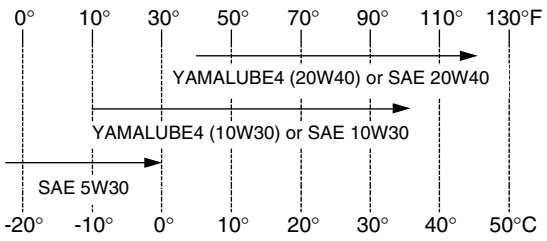 For Europe, Oceania 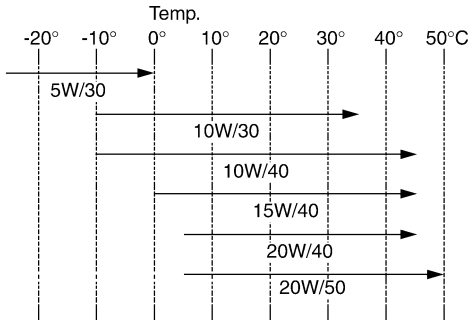 	API service SE, SF, SG type or higher

Item	Standard
Oil capacity	
Engine oil	
Periodic oil change	1.75 L (1.54 Imp qt, 1.85 US qt)
With oil filter replacement	1.85 L (1.63 Imp qt, 1.96 US qt)
Total amount	1.95 L (1.72 Imp qt, 2.06 US qt)
Radiator capacity (including all routes)	1.3 L (1.14 Imp qt, 1.37 US qt)
Air filter	Wet type element
Fuel	
Type	Premium unleaded gasoline only
Fuel tank capacity	10.0 L (2.20 Imp gal, 2.64 US gal)
Fuel reserve amount	1.9 L (0.42 Imp gal, 0.50 US gal)
Carburetor	
Type/quantity	5TG1 00 × 1
Manufacturer	KEIHIN
Spark plug	
Type/manufacturer	CR8E/NGK
Spark plug gap	0.7 ~ 0.8 mm (0.028 ~ 0.031 in)
Clutch type	Wet, multiple disc
Transmission	
Primary reduction system	Spur gear
Primary reduction ratio	62/22 (2.818)
Secondary reduction system	Chain drive
Secondary reduction ratio	38/14 (2.714)
Transmission type	Constant mesh, 5-speed
Operation	Left foot operation
Gear ratio	
1st gear	29/12 (2.416)
2nd gear	27/14 (1.928)
3rd gear	25/16 (1.562)
4th gear	23/18 (1.277)
5th gear	21/20 (1.050)
Chassis	
Frame type	Steel tube frame
Caster angle	5°
Camber angle	–1.5°
Kingpin angle	15.4°
Kingpin offset	1.0 mm (0.04 in)
Trail	21.0 mm (0.83 in)
Tread (STD) front	950 mm (37.40 in)
rear	900 mm (35.43 in)
Toe-in (with tires touching the ground)	2 ~ 12 mm (0.08 ~ 0.47 in)

Item		Standard
Tire		
Type		Tubeless
Size	front	AT21 × 7-10
	rear	AT20 × 10-9
Manufacturer	front	DUNLOP
	rear	DUNLOP
Type	front	KT331A Radial
	rear	KT355 Radial
Tire pressure (cold tire)		
Maximum load*		100 kg (220 lb)
Off-road riding	front	30 kPa (0.30 kg/cm^2, 4.4 psi)
	rear	35 kPa (0.35 kg/cm^2, 5.0 psi)
*Load in total weight of cargo, rider and accessories		
Brake		
Front brake	type	Dual disc brake
	operation	Right hand operation
Rear brake	type	Single disc brake
	operation	Right foot operation
Suspension		
Front suspension		Double wishbone
Rear suspension		Swingarm (link suspension)
Shock absorber		
Front shock absorber		Coil spring/gas-oil damper
Rear shock absorber		Coil spring/gas-oil damper
Wheel travel		
Front wheel travel		230 mm (9.06 in)
Rear wheel travel		256 mm (10.08 in)
Electrical		
Ignition system		DC-C.D.I.
Generator system		A.C. magneto
Battery type		GT7B-4
Battery capacity		12 V 6.5 Ah
Headlight type		Krypton bulb
Bulb voltage/wattage × quantity		
Headlight		12 V 30 W/30 W × 2
Tail/brake light		12 V 5 W/21 W × 1
Indicator and warning lights		
Neutral		12 V 1.7 W × 1
Coolant temperature		12 V 1.7 W × 1

EBS01002

ENGINE SPECIFICATIONS

Item	Standard	Limit
Cylinder head		
Warp limit ∗ 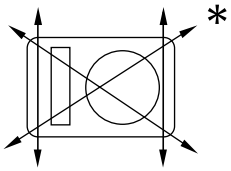	----	0.05 mm (0.002 in)
Cylinder		
Bore size	95.00 ~ 95.01 mm (3.7402 ~ 3.7406 in)	----
Camshaft		
Drive method	Chain drive (Left)	
Camshaft cap inside diameter	22.000 ~ 22.021 mm (0.8661 ~ 0.8670 in)	----
Camshaft journal diameter	21.967 ~ 21.980 mm (0.8648 ~ 0.8654 in)	----
Camshaft-journal-to-camshaft-cap clearance	0.020 ~ 0.054 mm (0.0008 ~ 0.0021 in)	0.080 mm (0.0032 in)
Camshaft lobe dimensions 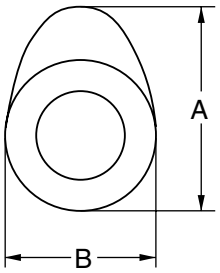		
Intake “A”	31.200 ~ 31.300 mm (1.2283 ~ 1.2323 in)	31.100 mm (1.2244 in)
“B”	22.550 ~ 22.650 mm (0.8878 ~ 0.8917 in)	22.450 mm (0.8839 in)
Exhaust “A”	30.950 ~ 31.050 mm (1.2185 ~ 1.2224 in)	30.850 mm (1.2146 in)
“B”	22.494 ~ 22.594 mm (0.8856 ~ 0.8895 in)	22.394 mm (0.8817 in)
Camshaft runout limit 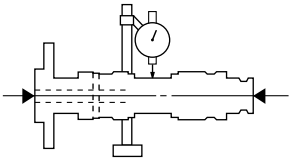	----	0.03 mm (0.0012 in)
Timing chain		
Timing chain type/No. of links	98XRH2010-118M	----
Timing chain adjustment method	Automatic	----

Item		Standard	Limit
Valve, valve seat, valve guide			
Valve clearance (cold)	IN	0.10 ~ 0.15 mm (0.0039 ~ 0.0059 in)	----
	EX	0.20 ~ 0.25 mm (0.0079 ~ 0.0098 in)	----
Valve dimensions			
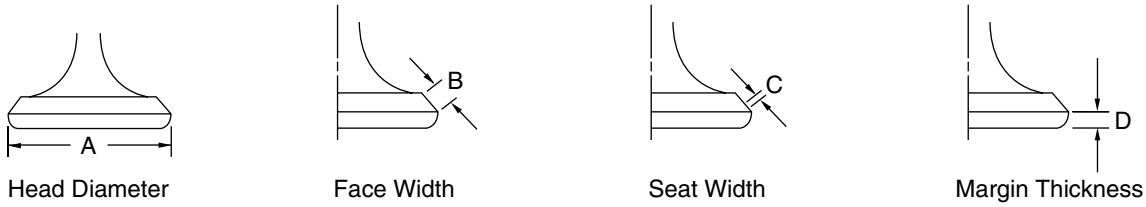 Head Diameter / Face Width / Seat Width / Margin Thickness			
"A" head diameter	IN	26.9 ~ 27.1 mm (1.0591 ~ 1.0669 in)	----
	EX	27.9 ~ 28.1 mm (1.0984 ~ 1.1063 in)	----
"B" face width	IN	2.26 mm (0.0890 in)	----
	EX	2.26 mm (0.0890 in)	----
"C" seat width	IN	0.9 ~ 1.1 mm (0.0354 ~ 0.0433 in)	1.6 mm (0.06 in)
	EX	0.9 ~ 1.1 mm (0.0354 ~ 0.0433 in)	1.6 mm (0.06 in)
"D" margin thickness	IN	1.0 mm (0.0394 in)	0.85 mm (0.033 in)
	EX	1.0 mm (0.0394 in)	0.85 mm (0.033 in)
Stem outside diameter	IN	4.475 ~ 4.490 mm (0.1762 ~ 0.1768 in)	4.445 mm (0.175 in)
	EX	4.965 ~ 4.980 mm (0.1955 ~ 0.1961 in)	4.935 mm (0.194 in)
Guide inside diameter	IN	4.500 ~ 4.512 mm (0.1772 ~ 0.1776 in)	4.550 mm (0.179 in)
	EX	5.000 ~ 5.012 mm (0.1969 ~ 0.1973 in)	5.050 mm (0.199 in)
Stem-to-guide clearance	IN	0.010 ~ 0.037 mm (0.0004 ~ 0.0015 in)	0.080 mm (0.003 in)
	EX	0.020 ~ 0.047 mm (0.0008 ~ 0.0019 in)	0.100 mm (0.004 in)
Valve stem runout		----	0.01 mm (0.0004 in)
Valve seat width	IN	0.9 ~ 1.1 mm (0.0354 ~ 0.0433 in)	1.6 mm (0.06 in)
	EX	0.9 ~ 1.1 mm (0.0354 ~ 0.0433 in)	1.6 mm (0.06 in)
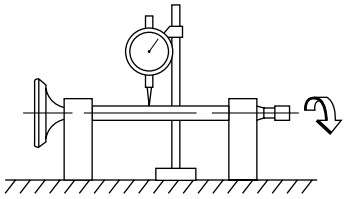			

Item		Standard	Limit
Valve spring			
Free length	IN	37.03 mm (1.46 in)	35.17 mm (1.38 in)
	EX	37.68 mm (1.48 in)	35.79 mm (1.41 in)
Set length (valve closed)	IN	27.87 mm (1.10 in)	----
	EX	27.38 mm (1.08 in)	----
Compressed pressure (installed)	IN	111.3 ~ 127.9 N (11.35 ~ 13.04 kg, 25.02 ~ 28.75 lb)	----
	EX	127.4 ~ 146.4 N (12.99 ~ 14.93 kg, 28.64 ~ 32.91 lb)	----
Tilt limit *	IN	----	2.5°/1.61 mm (2.5°/0.063 in)
	EX	----	2.5°/1.65 mm (2.5°/0.065 in)
Direction of winding (top view)	IN	Clockwise	----
	EX	Clockwise	----
Piston			
Piston to cylinder clearance		0.040 ~ 0.065 mm (0.0016 ~ 0.0026 in)	0.10 mm (0.004 in)
Piston size “D”		94.945 ~ 94.960 mm (3.7380 ~ 3.7386 in)	----
Measuring point “H”		10 mm (0.39 in)	----
Piston off set		1.0 mm (0.0394 in)	----
Offset direction		Intake side	----
Piston pin bore inside diameter		20.004 ~ 20.015 mm (0.7876 ~ 0.7880 in)	20.045 mm (0.789 in)
Piston pin outside diameter		19.991 ~ 20.000 mm (0.7870 ~ 0.7874 in)	19.971 mm (0.786 in)
Piston-pin-to-piston-pin-bore clearance		0.004 ~ 0.024 mm (0.0002 ~ 0.0009 in)	0.074 mm (0.0029 in)

Item	Standard	Limit
Piston rings		
Top ring		
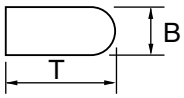		
Type	Barrel	----
Dimensions (B × T)	1.2 × 3.5 mm (0.047 × 0.138 in)	----
End gap (installed)	0.20 ~ 0.30 mm (0.008 ~ 0.012 in)	0.55 mm (0.022 in)
Side clearance	0.030 ~ 0.065 mm (0.0012 ~ 0.0026 in)	0.12 mm (0.0047 in)
2nd ring		
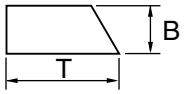		
Type	Taper	----
Dimensions (B × T)	1.00 × 3.35 mm (0.039 × 0.132 in)	----
End gap (installed)	0.35 ~ 0.50 mm (0.014 ~ 0.020 in)	0.85 mm (0.034 in)
Side clearance	0.020 ~ 0.055 mm (0.0008 ~ 0.0022 in)	0.12 mm (0.0047 in)
Oil ring		
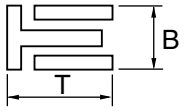		
Dimensions (B × T)	2.0 × 2.9 mm (0.079 × 0.114 in)	----
End gap (installed)	0.20 ~ 0.50 mm (0.008 ~ 0.020 in)	----
Crankshaft		
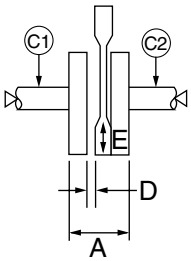		
Crank width “A”	61.95 ~ 62.00 mm (2.439 ~ 2.441 in)	----
Runout limit C1	0.03 mm (0.0012 in)	0.05 mm (0.002 in)
C2	0.03 mm (0.0012 in)	0.05 mm (0.002 in)
Big end side clearance “D”	0.15 ~ 0.45 mm (0.0059 ~ 0.0177 in)	0.50 mm (0.0197 in)
Big end radial clearance “E”	0.010 ~ 0.025 mm (0.0004 ~ 0.0010 in)	----

Item	Standard	Limit
Balancer		
Balancer drive method	Gear	----
Clutch		
Friction plate 1 (inside dia.: 120 mm)		
Thickness	2.9 ~ 3.1 mm (0.114 ~ 0.122 in)	2.8 mm (0.110 in)
Quantity	7	----
Friction plate 2 (inside dia.: 128 mm)		
Thickness	2.9 ~ 3.1 mm (0.114 ~ 0.122 in)	2.8 mm (0.110 in)
Quantity	1	----
Clutch plate		
Thickness	1.5 ~ 1.7 mm (0.059 ~ 0.067 in)	----
Quantity	7	----
Max. warpage	----	0.2 mm (0.0079 in)
Clutch spring		
Free length	51.8 mm (2.04 in)	50.0 mm (1.97 in)
Quantity	6	----
Clutch housing thrust clearance	0.10 ~ 0.35 mm (0.0039 ~ 0.0138 in)	----
Clutch housing radial clearance	0.010 ~ 0.044 mm (0.0004 ~ 0.0017 in)	----
Clutch release method	Inner push, cam push	----
Push rod 2 bending limit	0.1 mm (0.004 in)	----
Transmission		
Main axle deflection limit	----	0.08 mm (0.0031 in)
Drive axle deflection limit	----	0.08 mm (0.0031 in)
Shifter		
Shifter type	Shift drum and guide bar	----
Max. shift fork guide bar bending	----	0.05 mm (0.002 in)
Decompression device		
Device type	Auto decomp	----
Air filter oil grade	Engine oil	----

Item		Standard	Limit
Carburetor			
I. D. mark		5TG1 00	----
Main jet	(M.J)	#158	----
Main air jet	(M.A.J)	ø1.0	----
Jet needle/clip position	(J.N)	NDSR/4	----
Cutaway	(C.A)	1.5	----
Pilot air jet	(P.A.J.1)	#100	----
Pilot outlet	(P.O)	ø0.9	----
Pilot jet	(P.J)	#42	----
Bypass 1	(B.P.1)	ø1.0	----
Valve seat size	(V.S)	ø3.8	----
Starter jet	(G.S.1)	#90	----
Float height	(F.H)	8 mm (0.31 in)	----
Engine idle speed		1,750 ~ 1,850 r/min	----
Intake vacuum		34.7 ~ 37.3 kPa (260 ~ 280 mmHg, 10.2 ~ 11.0 inHg)	----
Throttle position sensor			
Resistance		4 ~ 6 kΩ at 20 °C	----
Oil filter type		Paper	----
Oil pump			
Oil pump type		Trochoid	----
Inner-rotor-to-outer-rotor-tip clearance		0.07 ~ 0.12 mm (0.0028 ~ 0.0047 in)	0.20 mm (0.0079 in)
Outer-rotor-to-oil-pump-housing clearance		0.09 ~ 0.17 mm (0.0035 ~ 0.0067 in)	0.24 mm (0.0094 in)
Bypass valve setting pressure		40.0 ~ 80.0 kPa (300 ~ 602 mmHg, 11.8 ~ 23.7 inHg)	----
Cooling system			
Radiator core			
Width		300 mm (11.8 in)	----
Height		188 mm (7.4 in)	----
Depth		24 mm (0.94 in)	----
Radiator cap opening pressure		107.9 ~ 137.3 kPa (1.079 ~ 1.373 kg/cm^2, 15.35 ~ 19.53 psi)	----
Radiator capacity		0.58 L (0.51 Imp qt, 0.61 US qt)	----
Coolant reservoir			
Capacity		0.29 L (0.26 Imp qt, 0.31 US qt)	----
From low to full level		0.16 L (0.14 Imp qt, 0.17 US qt)	----
Water pump			
Type		Single-suction centrifugal pump	----

Lubrication chart

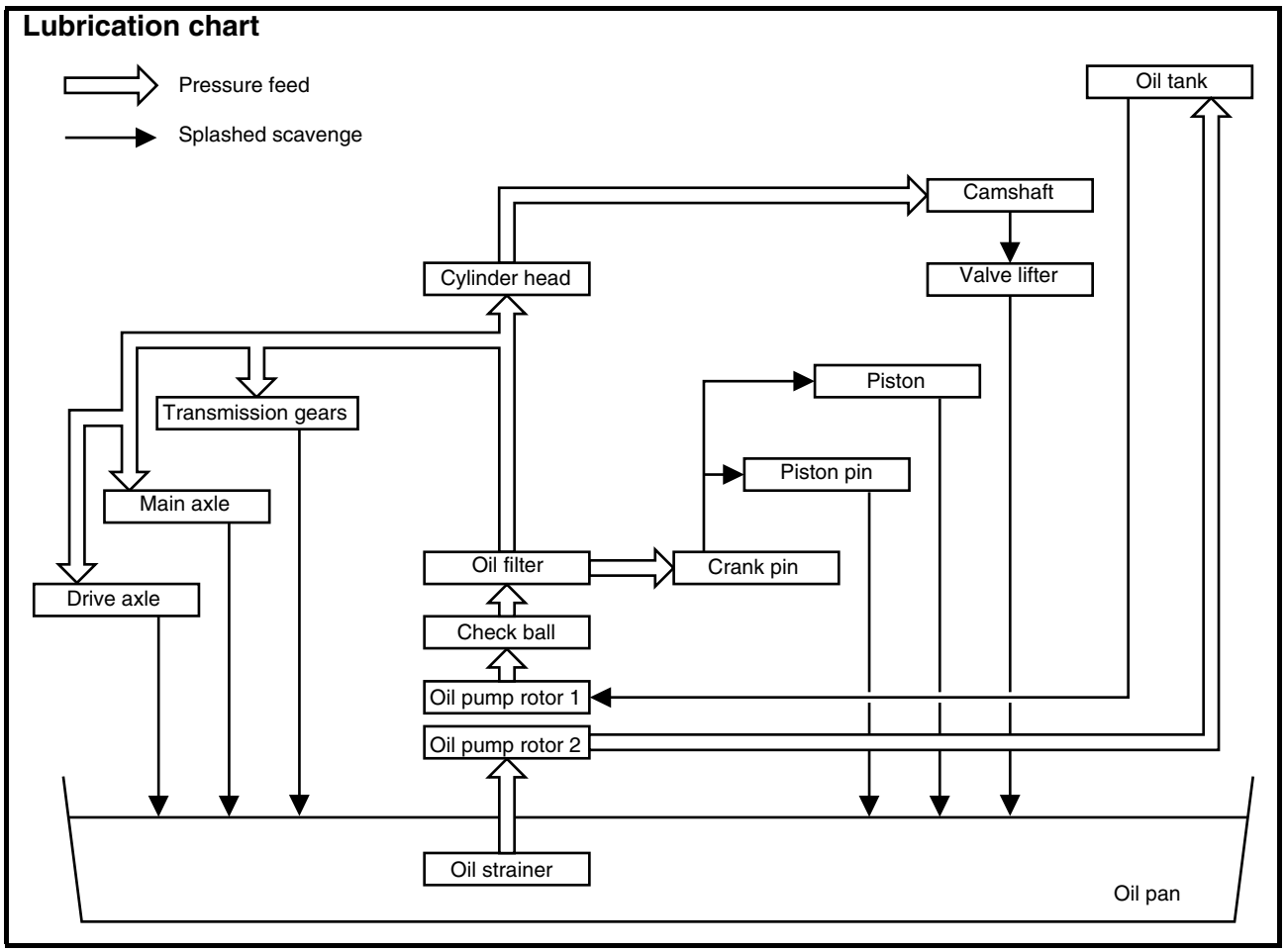

Cylinder head tightening sequence

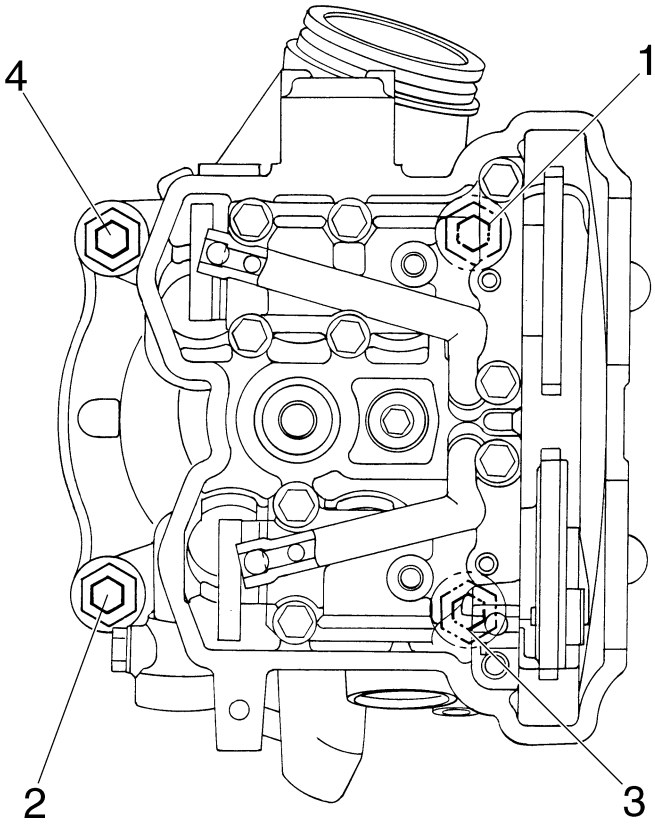

EBS01003

CHASSIS SPECIFICATIONS

Item		Standard	Limit
Steering system			
Steering bearing type		Ball and race bearing	----
Front suspension			
Shock absorber travel		110 mm (4.33 in)	----
Fork spring free length		265 mm (10.43 in)	----
Spring fitting length		255 mm (10.04 in)	----
Spring rate (K1)		19.6 N/mm (2.00 kg/mm, 112 lb/in)	----
Spring rate (K2)		39.2 N/mm (4.00 kg/mm, 224 lb/in)	----
Optional spring		No	----
Rear suspension			
Shock absorber travel		116.0 (4.57 in)	----
Spring free length		259 mm (10.20 in)	----
Spring fitting length		244 mm (9.61 in)	----
Spring rate (K1)		46.0 N/mm (4.69 kg/mm, 263 lb/in)	----
Stroke (K1)		0 ~ 116.0 mm (0 ~ 4.57 in)	----
Optional spring		No	----
Swingarm			
Free play limit	end	----	1 mm (0.04 in)
	side	----	1 mm (0.04 in)
Front wheel			
Type		Panel wheel	----
Rim size		10 × 5.5 AT	----
Rim material		Aluminum	----
Rim runout limit	radial	----	2.0 mm (0.08 in)
	lateral	----	2.0 mm (0.08 in)
Rear wheel			
Type		Panel wheel	----
Rim size		9 × 8.5 AT	----
Rim material		Aluminum	----
Rim runout limit	radial	----	2.0 mm (0.08 in)
	lateral	----	2.0 mm (0.08 in)
Drive chain			
Type/manufacturer		520MXV/DAIDO	----
Link quantity		96	----
Drive chain slack		25 ~ 35 mm (0.98 ~ 1.38 in)	----

Item	Standard	Limit
Front disc brake		
Type	Dual	----
Disc outside diameter × thickness	161.0 × 3.5 mm (6.34 × 0.14 in)	----
Pad thickness inner	4.5 mm (0.18 in)	1.0 mm (0.04 in)
Pad thickness outer	4.5 mm (0.18 in)	1.0 mm (0.04 in)
Master cylinder inside diameter	12.7 mm (0.50 in)	----
Caliper cylinder inside diameter	27 mm (1.06 in)	----
Brake fluid type	DOT 4	----
Rear disc brake		
Type	Single	----
Disc outside diameter × thickness	200.0 × 3.6 mm (7.87 × 0.14 in)	----
Pad thickness inner	4.5 mm (0.18 in)	1.0 mm (0.04 in)
Pad thickness outer	4.5 mm (0.18 in)	1.0 mm (0.04 in)
Master cylinder inside diameter	12.7 mm (0.50 in)	----
Caliper cylinder inside diameter	33.96 mm (1.34 in)	----
Brake fluid type	DOT 4	----
Brake lever and brake pedal		
Brake pedal position	11.7 mm (0.46 in)	----
Parking brake cable end length	56 ~ 60 mm (2.20 ~ 2.36 in)	----
Clutch lever free play (lever end)	8 ~ 13 mm (0.31 ~ 0.51 in)	----
Throttle lever free play	2 ~ 4 mm (0.08 ~ 0.16 in)	----
Speed limiter length	Less than 12 mm (0.47 in)	----
Shift pedal height	25 mm (0.98 in)	----

EBS01004

ELECTRICAL SPECIFICATIONS

Item	Standard	Limit
Voltage	12 V	----
Ignition system		
Ignition timing (B.T.D.C.)	7.5°/1,800 r/min	----
Advancer type	Digital type	----
C.D.I.		
C.D.I. unit model/manufacturer	5TG/MORIC	----
Pickup coil resistance/color	248 ~ 372 Ω at 20 °C (68 °F) red–white	----
Ignition coil		
Model/manufacturer	J0474/DENSO	----
Minimum ignition spark gap	6 mm (0.24 in)	----
Primary winding resistance	0.08 ~ 0.10 Ω at 20 °C (68 °F)	----
Secondary winding resistance	4.56 ~ 6.84 kΩ at 20 °C (68 °F)	----
Charging system		
Type	A.C. magneto	----
Model/manufacturer	F5TG/MORIC	----
Nominal output	14 V 120 W at 5,000 r/min	----
Lighting coil resistance/color	0.224 ~ 0.336 Ω at 20 °C (68 °F) yellow–ground	----
Charging coil resistance/color	0.288 ~ 0.432 Ω at 20 °C (68 °F) white–ground	----
Rectifier/regulator		
Type	Semi conductor-short circuit	----
Model/manufacturer	SH712AB/SHINDENGEN	----
No load regulated voltage (DC)	14.1 ~ 14.9 V	----
(AC)	13.0 ~ 14.0 V	----
Rectifier capacity (DC)	8.0 A	----
(AC)	12.0 A	----
Electric starter system		
Type	Constant mesh type	----
Starter motor		
Model/manufacturer	SM-14/MITSUBA	----
Output	0.5 kW	----
Armature coil resistance	0.004 ~ 0.005 Ω at 20 °C (68 °F)	----
Brush overall length	10 mm (0.39 in)	3.5 mm (0.14 in)
Spring force	7.16 ~ 9.52 N (730 ~ 971 gf, 25.77 ~ 34.27 oz)	----
Commutator diameter	28 mm (1.10 in)	27 mm (1.06 in)
Mica undercut	0.7 mm (0.03 in)	----

Item	Standard	Limit
Starter relay		
Model/manufacturer	2768079-A/JIDECO	----
Amperage rating	180 A	----
Coil winding resistance	4.18 ~ 4.62 Ω	----
Thermo switch		
Thermo switch 1		
Model/manufacturer	5GH/NIPPON THERMOSTAT	----
Opening temperature	95 ~ 101 °C (203.0 ~ 213.8 °F)	----
Closing temperature	89 ~ 95 °C (192.2 ~ 203.0 °F)	----
Thermo switch 2		
Model/manufacturer	5LP/NIPPON THERMOSTAT	----
Opening temperature	117 ~ 123 °C (242.6 ~ 253.4 °F)	----
Closing temperature	112 ~ 118 °C (233.6 ~ 244.4 °F)	----
Circuit breaker		
Type	Fuse	----
Amperage for individual circuit		
Fuse	15 A × 1	----
Reserve	15 A × 1	----

EBS01005

TIGHTENING TORQUES

ENGINE TIGHTENING TORQUES

Part to be tightened	Part name	Thread size	Q'ty	Tightening torque			Remarks
				Nm	m · kg	ft · lb	
Spark plug	—	M10S	1	13	1.3	9.4	
Cylinder head cover	Bolt	M6	2	10	1.0	7.2	
Camshaft cap	Bolt	M6	10	10	1.0	7.2	E
Cylinder head blind plug screw	Screw	M12	1	37	3.7	27	
Timing chain tensioner	Bolt	M6	2	10	1.0	7.2	
Timing chain tensioner cap	Bolt	M6	1	7	0.7	5.1	
Timing chain guide (intake)	Bolt	M6	2	10	1.0	7.2	
Cylinder head (exhaust pipe)	Stud bolt	M8	1	15	1.5	11	
Cylinder head (timing chain side)	Stud bolt	M6	2	7	0.7	5.1	
Cylinder head	Bolt	M10	4	See NOTE. *·			M
	Nut	M6	2	10	1.0	7.2	
Parking brake cable and clutch cable holder	Bolt	M6	1	10	1.0	7.2	
Cylinder	Bolt	M6	1	10	1.0	7.2	
Engine oil drain bolt (oil tank)	Bolt	M8	1	19	1.9	13	
Engine oil drain bolt (engine)	Bolt	M10	1	20	2.0	14	
Oil pump	Bolt	M6	3	10	1.0	7.2	
Oil pump housing cover	Screw	M4	1	2	0.2	1.4	
Engine oil drain bolt (oil filter)	Bolt	M6	1	10	1.0	7.2	
Oil filter cover	Bolt	M6	2	10	1.0	7.2	
Oil delivery pipe 1	Union bolt	M10	1	20	2.0	14	
	Union bolt	M8	2	18	1.8	13	
Oil delivery pipe 2	Bolt	M6	1	10	1.0	7.2	
Oil pipe 1 and crankcase cover	Bolt	M6	1	8	0.8	8	
Oil pipe 2 and left crankcase	Bolt	M6	1	8	0.8	8	
Oil pipe 2 and oil tank	Bolt	M6	1	10	1.0	7.2	
Oil gallery bolt	Bolt	M6	1	10	1.0	7.2	
Exhaust pipe	Bolt	M8	1	24	2.4	17	
	Nut	M8	1	13	1.3	9.4	
Exhaust pipe protector	Screw	M6	2	7	0.7	5.1	
Muffler protector	Screw	M6	2	7	0.7	5.1	
Muffler	Bolt	M8	2	34	3.4	24	
Muffler and exhaust pipe	Bolt	M8	1	20	2.0	14	
Spark arrester	Bolt	M6	1	10	1.0	7.2	
Silencer cap	Bolt	M6	1	10	1.0	7.2	
Radiator	Bolt	M6	4	7	0.7	5.1	
Radiator fan	Bolt	M6	3	9	0.9	6.5	
Coolant drain bolt	Bolt	M6	1	10	1.0	7.2	
Impeller	—	M8	1	14	1.4	10	
Water pump inlet pipe	Bolt	M6	1	10	1.0	7.2	

Part to be tightened	Part name	Thread size	Q'ty	Tightening torque			Remarks
				Nm	m · kg	ft · lb	
Cylinder head water jacket	Bolt	M6	1	10	1.0	7.2	
Water pump housing cover	Bolt	M6	4	10	1.0	7.2	
Coolant reservoir	Bolt	M6	2	7	0.7	5.1	
Clutch cover	Bolt	M6	7	10	1.0	7.2	
Clutch spring	Bolt	M6	6	8	0.8	8	
Clutch boss	Nut	M20	1	75	7.5	54	Use a lock washer.
Push lever shaft plate	Bolt	M6	1	10	1.0	7.2	
Clutch cable holder	Bolt	M6	1	10	1.0	7.2	
Crankcase cover	Bolt	M6	8	10	1.0	7.2	
Parking brake cable holder and crankcase cover	Bolt	M6	2	10	1.0	7.2	
Left crankcase	Bolt	M6	11	12	1.2	8.7	
Oil strainer	Bolt	M6	2	10	1.0	7.2	
Crankcase bearing retainer	Screw	M6	3	12	1.2	8.7	
	Screw	M6	4	12	1.2	8.7	
	Bolt	M6	7	10	1.0	7.2	
Primary drive gear	Nut	M20	1	75	7.5	54	Use a lock washer.
Balancer driven gear	Nut	M14	1	50	5.0	36	Use a lock washer.
Drive sprocket	Nut	M20	1	75	7.5	54	Use a lock washer.
Drive axle oil seal retainer	Bolt	M6	2	10	1.0	7.2	
Torque limiter cover	Bolt	M6	2	10	1.0	7.2	
A.C. magneto cover	Bolt	M6	9	10	1.0	7.2	
A.C. magneto rotor	Nut	M12	1	65	6.5	47	
Stator coil	Bolt	M5	2	7	0.7	5.1	
A.C. magneto lead holder	Bolt	M5	2	7	0.7	5.1	
Pickup coil	Bolt	M6	2	10	1.0	7.2	
Starter clutch	Bolt	M6	6	16	1.6	11	
Shift drum segment	Bolt	M8	1	30	3.0	22	
Shift guide	Bolt	M6	2	10	1.0	7.2	
Stopper lever	Bolt	M6	1	10	1.0	7.2	
Shift pedal	Bolt	M6	1	12	1.2	8.7	
Throttle cable cover (carburetor)	Bolt	M5	2	4	0.4	2.9	
Carburetor joint clamp screw (carburetor side)	Screw	M5	1	3	0.4	2.9	
Carburetor joint clamp screw (cylinder head side)	Screw	M4	1	3	0.3	2.2	
Carburetor clamp screw (air intake duct side)	Screw	M6	1	3	0.3	2.2	
Neutral switch	—	M10	1	20	2.0	14	
Thermo switch 1	—	M18	1	28	2.8	20	

Part to be tightened	Part name	Thread size	Q'ty	Tightening torque			Remarks
				Nm	m · kg	ft · lb	
Thermo switch 2	—	M18	1	28	2.8	20	
Starter motor	Bolt	M6	2	10	1.0	7.2	
Starter motor lead	Nut	M6	1	7	0.7	5.1	
Bush holder assembly and rear bracket nut	Nut	M6	1	7	0.7	5.1	

NOTE:

*1: Tighten the cylinder head bolts to 30 Nm (3.0 m · kg, 22 ft · lb) in the proper tightening sequence, remove and retighten the cylinder head bolts to 20 Nm (2.0 m · kg, 14 ft · lb) in the proper tightening sequence, and then tighten the cylinder head bolts further in two steps of 90° to reach the specified angle of 180° in the proper tightening sequence.

EBS01006

CHASSIS TIGHTENING TORQUES

Part to be tightened	Thread size	Tightening torque			Remarks
		Nm	m · kg	ft · lb	
Engine stay and frame	M8	33	3.3	24	
Engine stay and engine upper bracket	M8	26	2.6	19	
Engine upper bracket and engine	M10	40	4.0	29	
Engine lower bracket and engine	M10	66	6.6	48	
Engine and frame	M10	66	6.6	48	
Engine lower bracket and frame	M8	38	3.8	27	
Swingarm pivot shaft, engine, and frame	M16	100	10	72	
Rear shock absorber and frame	M12	80	8.0	58	
Rear shock absorber locknut	M50	45	4.5	32	
Relay arm and swingarm	M12	55	5.5	40	
Connecting arm and frame	M12	55	5.5	40	
Relay arm and rear shock absorber	M12	43	4.3	31	
Relay arm and connecting arm	M12	55	5.5	40	
Hub, brake caliper bracket, and swingarm	M12	85	8.5	61	
Drive chain adjusting bolt and locknut	M8	16	1.6	11	
Front shock absorber and frame	M10	45	4.5	32	
Front shock absorber and lower front arm	M10	45	4.5	32	
Front shock absorber locknut	M50	30	3.0	22	
Upper front arm and frame	M10	38	3.8	27	
Lower front arm and frame	M10	55	5.5	40	
Steering stem, pitman arm, and frame	M14	180	18	130	
Steering stem bushing and frame	M8	23	2.3	17	Use a lock washer.
Steering stem and handlebar holder	M8	23	2.3	17	
Tie-rod end and locknut	M10	15	1.5	11	
Steering knuckle and front wheel hub	M14	70	7.0	50	
Steering knuckle and front arm (upper and lower)	M10	25	2.5	18	
Steering knuckle and tie-rod ball joint	M10	25	2.5	18	
Pitman arm and tie-rod ball joint	M10	25	2.5	18	
Frame and bearing retainer	M42	65	6.5	47	
Fuel tank and fuel cock	M6	4	0.4	2.9	
Fuel tank and frame	M6	7	0.7	5.1	
Front wheel and front wheel hub	M10	45	4.5	32	
Steering knuckle and front brake caliper bracket	M8	28	2.8	20	
Front brake disc and front wheel hub	M8	28	2.8	20	
Rear axle and rear wheel hub	M14	120	12	85	
Rear brake caliper and brake caliper bracket	M8	31	3.1	22	
Rear wheel and rear wheel hub	M10	45	4.5	32	
Driven sprocket and sprocket bracket	M10	55	5.5	40	
Front brake pipe nut	M10	19	1.9	13	
Front brake master cylinder and handlebar	M6	7	0.7	5.1	
Parking brake lever and clutch lever	M6	7	0.7	5.1	

Part to be tightened	Thread size	Tightening torque			Remarks
		Nm	m · kg	ft · lb	
Front brake master cylinder and brake lever	M6	6	0.6	4.3	
Front brake master cylinder and brake hose	M10	27	2.7	19	
Brake hose joint and frame	M6	10	1.0	7.2	
Bleed screw	M8	6	0.6	4.3	
Front brake pad retaining bolt	M10	18	1.8	13	
Front brake caliper and brake hose	M10	27	2.7	19	
Rear brake caliper retaining bolt	M8	23	2.3	17	
Parking brake case bracket and parking brake case	M8	23	2.3	17	
Rear axle ring nut	M36	100	10.0	72	
Rear axle ring nut set bolt	M6	7	0.7	5.1	
Rear brake pad retaining bolt	M8	18	1.8	13	Use a lock washer.
Rear brake caliper and brake hose	M10	30	3.0	22	
Rear brake master cylinder and frame	M8	20	2.0	14	
Rear brake master cylinder and brake hose	M10	30	3.0	22	
Parking brake adjusting bolt and locknut	M8	16	1.6	11	
Rear brake disc and brake disc bracket	M8	28	2.8	20	
Rear brake fluid reservoir cover and bracket	M6	11	1.1	8	
Rear brake fluid reservoir and bracket	M6	4	0.4	2.9	
Front bumper and frame	M8	31	3.1	22	
Front fender and frame	M6	7	0.7	5.1	
Side cover and frame	M6	7	0.7	5.1	
Side cover, rear fender, and frame	M6	7	0.7	5.1	
Rear fender and frame	M6	7	0.7	5.1	
Rear fender stay and rear fender	M6	7	0.7	5.1	
Front fender stay and front fender	M6	7	0.7	5.1	
Rear carrier bar and frame	M8	33	3.3	24	
Footrest and frame	M10	65	6.5	48	
Foot protector and footrest	M6	13	1.3	9.4	
Foot protector and footrest	M8	16	1.6	11	
Foot protector and frame	M8	16	1.6	11	
Battery holding bracket and frame	M6	7	0.7	5.1	
Air filter case and frame	M6	7	0.7	5.1	
Carburetor joint clamp screw	M4	3	0.3	2.2	
Headlight and frame	M6	7	0.7	5.1	
Tail/brake light bracket and frame	M6	7	0.7	5.1	
Tail/brake light bracket and tail/brake light	M6	7	0.7	5.1	
Drive chain guide roller and frame	M8	19	1.9	13	
Engine skid plate and frame	M6	7	0.7	5.1	
Main frame and rear frame	M10	54	5.4	39	

EBS00022

HOW TO USE THE CONVERSION TABLE

All specification data in this manual are listed in SI and METRIC UNITS.
Use this table to convert METRIC unit data to IMPERIAL unit data.

Ex.

METRIC		MULTIPLIER		IMPERIAL
** mm	×	0.03937	=	** in
2 mm	×	0.03937	=	0.08 in

CONVERSION TABLE

METRIC TO IMPERIAL			
	Metric unit	Multiplier	Imperial unit
Torque	m · kg m · kg cm · kg cm · kg	7.233 86.794 0.0723 0.8679	ft · lb in · lb ft · lb in · lb
Weight	kg g	2.205 0.03527	lb oz
Speed	km/hr	0.6214	mph
Distance	km m m cm mm	0.6214 3.281 1.094 0.3937 0.03937	mi ft yd in in
Volume/ Capacity	cc (cm^3) cc (cm^3) lt (liter) lt (liter)	0.03527 0.06102 0.8799 0.2199	oz (IMP liq.) cu · in qt (IMP liq.) gal (IMP liq.)
Misc.	kg/mm kg/cm^2 Centigrade (°C)	55.997 14.2234 9/5+32	lb/in psi (lb/in^2) Fahrenheit (°F)

EBS00023

GENERAL TIGHTENING TORQUE SPECIFICATIONS

This chart specifies tightening torques for standard fasteners with a standard ISO thread pitch. Tightening torque specifications for special components or assemblies are provided for each chapter of this manual. To avoid warpage, tighten multi-fastener assemblies in a crisscross pattern and progressive stages until the specified tightening torque is reached. Unless otherwise specified, tightening torque specifications require clean, dry threads. Components should be at room temperature.

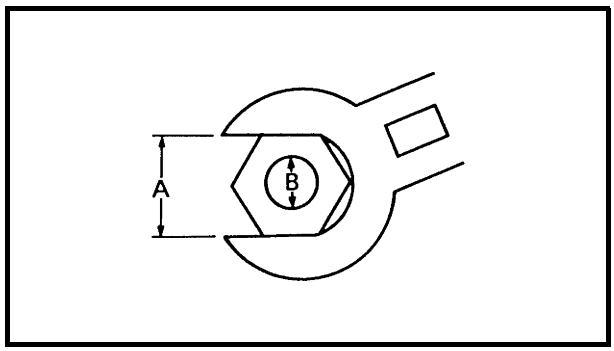

A: Distance between flats
B: Outside thread diameter

A (nut)	B (bolt)	General tightening torques		
		Nm	m · kg	ft · lb
10 mm	6 mm	6	0.6	4.3
12 mm	8 mm	15	1.5	11
14 mm	10 mm	30	3.0	22
17 mm	12 mm	55	5.5	40
19 mm	14 mm	85	8.5	61
22 mm	16 mm	130	13.0	94

EBS00024

LUBRICATION POINTS AND LUBRICANT TYPES

ENGINE

Lubrication point	Lubricant
Oil seal lips	LS
O-rings	LS
Bearings	E
Crankshaft pins	E
Valve stems (intake and exhaust)	M
Valve stem ends (intake and exhaust)	M
Valve lifters (intake and exhaust)	E
Camshafts (intake and exhaust)	M
Camshaft cap bolt	E
Cylinder head bolt	M
Piston surfaces	E
Piston pins	M
Auto decomp	E
Auto decompression lever	E
Water pump impeller shaft	E
Oil pump rotors (inner and outer) and oil pump housing	E
Oil pump drive gear	E
Connecting rod (bearing)	E
Torque limiter	E
Starter idle gear inner surface and shaft	E
Starter clutch inner surface	E
Primary driven gear	E
Push rod 1, 2 and ball	E
Push lever shaft	E
Push rod bearing and plane washer	E
Transmission gears (wheel and pinion)	M
Shift forks and shift fork guide bars	E
Transmission gears (wheel and pinion) splines	E
Shift drum shaft	E
Shift shaft	E
Shift shaft assembly	E
Cylinder head cover mating surface	Sealant (Quick Gasket®) Yamaha bond No.1215

Lubrication point	Lubricant
Crankcase mating surfaces	Sealant (Quick Gasket®) Yamaha bond No.1215
Cylinder head and cylinder head cover mating surfaces	Sealant (Quick Gasket®) Yamaha bond No.1215
AC magneto lead grommet (AC magneto cover)	Sealant (Quick Gasket®) Yamaha bond No.1215

EBS00025

COOLANT FLOW DIAGRAMS

① Radiator inlet hose
② Radiator
③ Radiator fan
④ Radiator outlet hose
⑤ Water pump inlet pipe
⑥ Water pump
⑦ Thermo switch 1
⑧ Thermo switch 2
⑨ Cylinder head water jacket

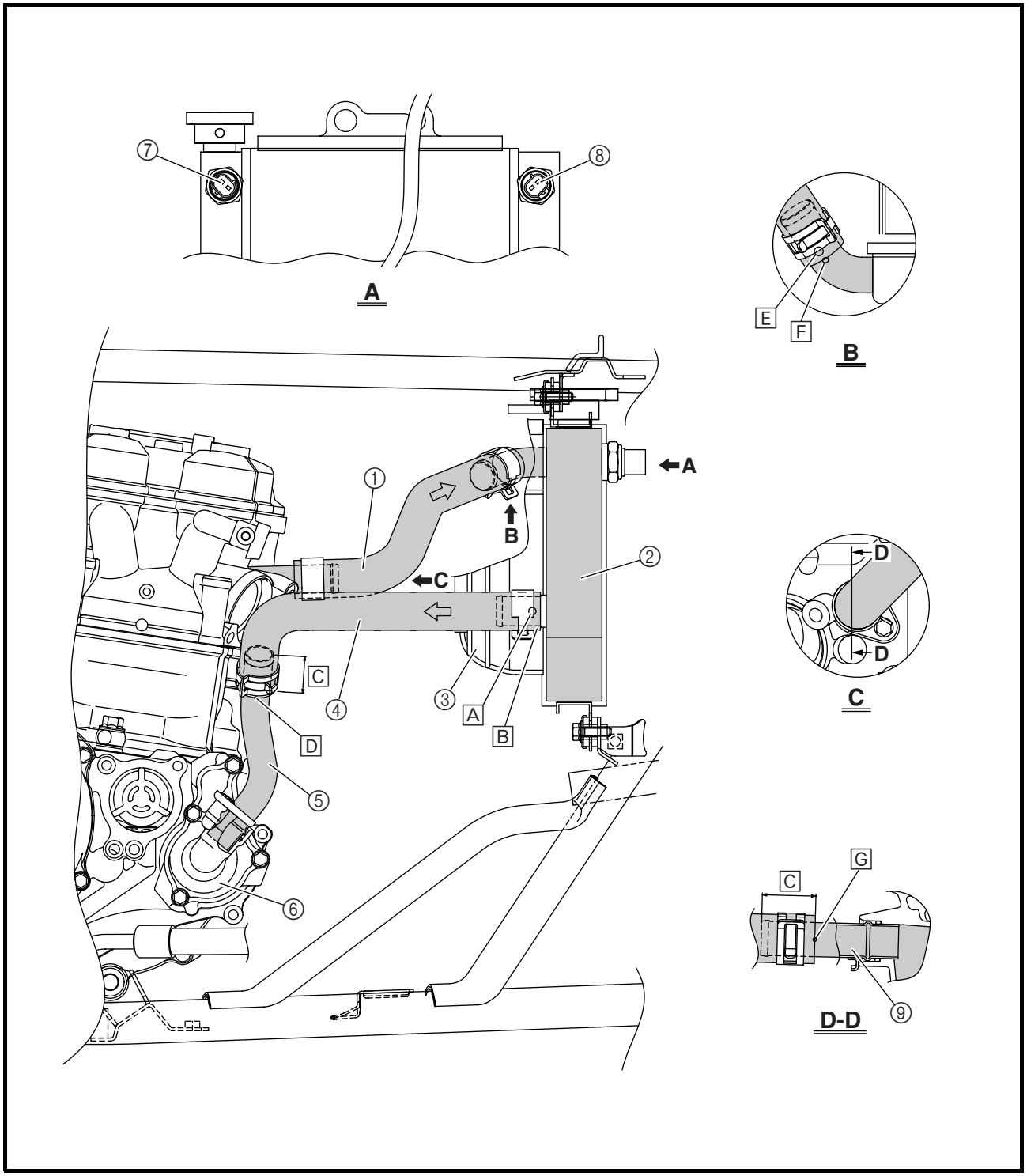

A Install the radiator outlet hose with the white paint mark parallel to the ground as shown.
B Install the radiator outlet hose completely on the radiator pipe until the hose contacts the flange of the pipe.
C 30 mm (1.18 in)
D Install the radiator outlet hose onto the water pump inlet pipe until the end of the hose reaches the middle of the blue paint mark on the pipe.
E Align the white paint mark on the radiator inlet hose with the projection on the radiator pipe.
F Install the radiator inlet hose onto the radiator pipe until the end of the hose contacts the projection of the pipe.
G Install the radiator inlet hose onto the outlet pipe of the cylinder head water jacket until the end of the hose reaches the middle of the blue paint mark on the pipe.

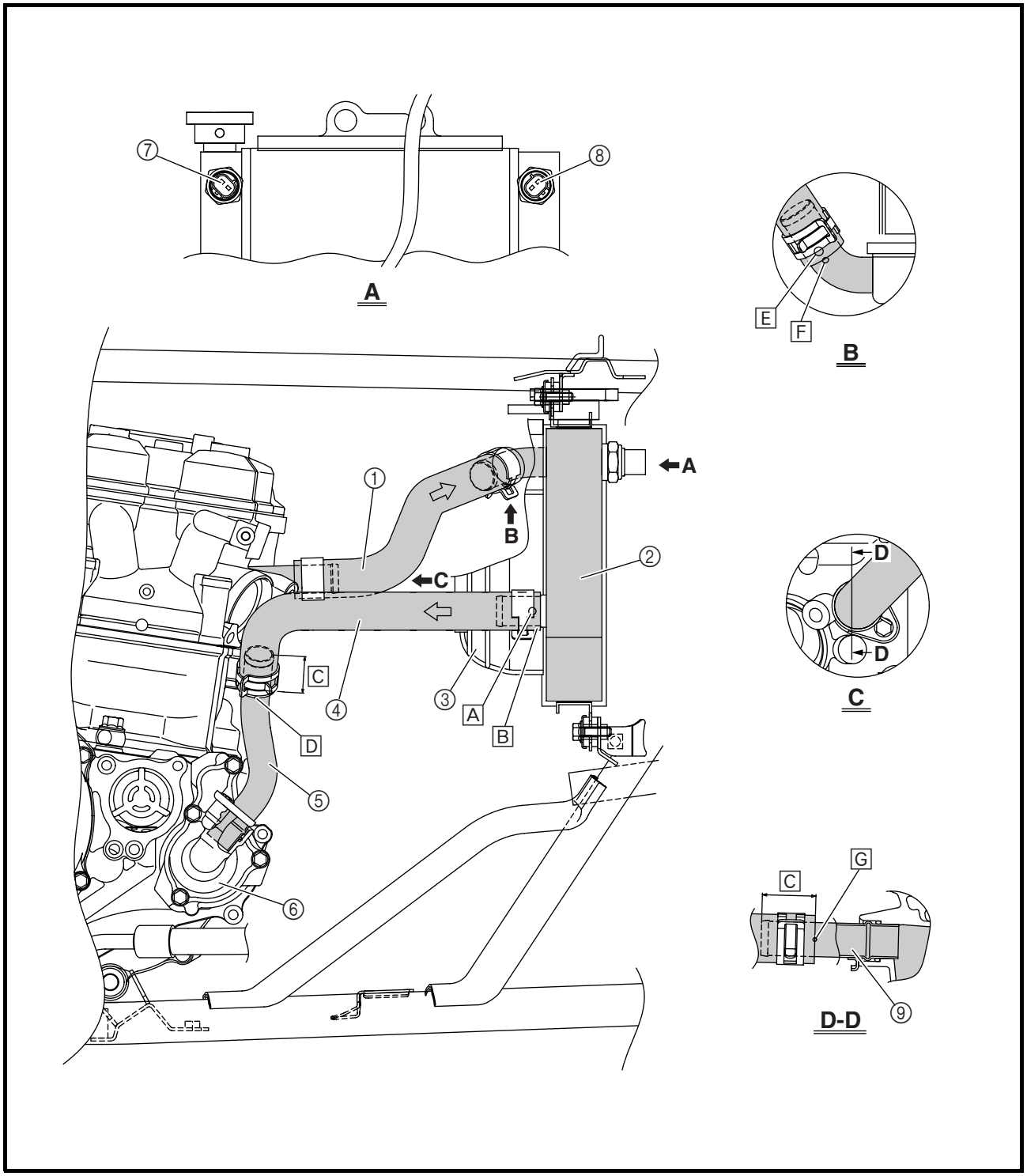

EBS00026

OIL FLOW DIAGRAMS

① Intake camshaft
② Exhaust camshaft
③ Oil filter element
④ Oil tank
⑤ Oil pipe 1
⑥ Oil pipe 2
⑦ Main axle
⑧ Drive axle
⑨ Oil delivery pipe 1
⑩ Oil pump
⑪ Oil strainer

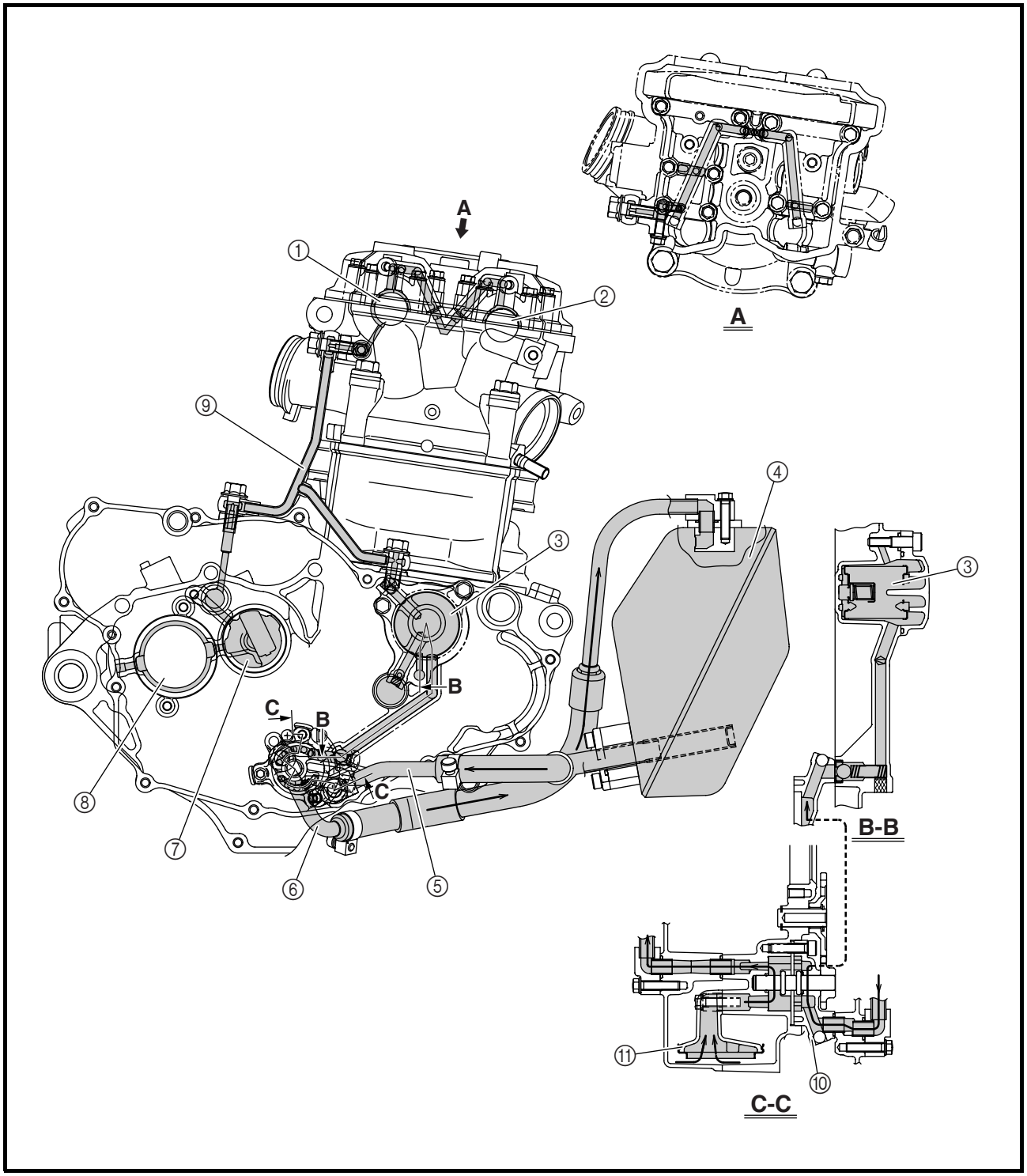

① Camshaft
② Oil filter element
③ Crankshaft
④ Main axle
⑤ Drive axle
⑥ Oil delivery pipe 2
⑦ Connecting rod

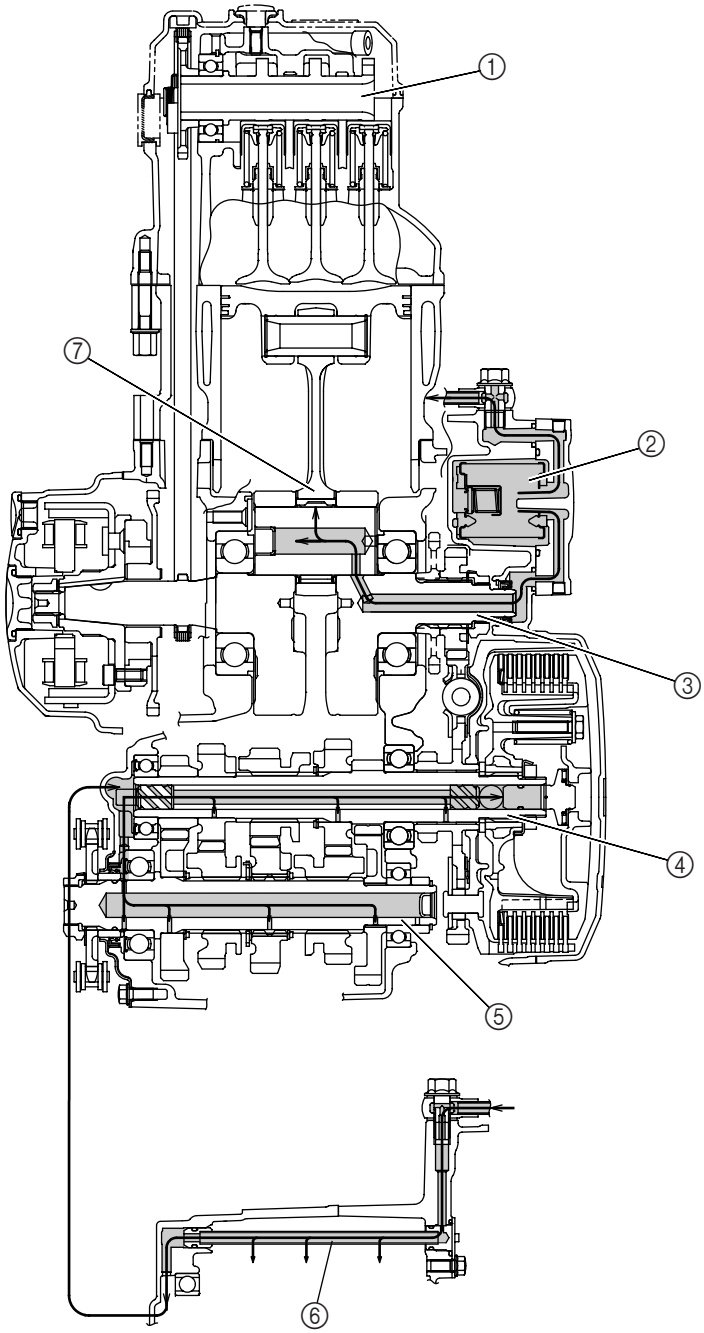

EBS00028

CABLE ROUTING

① Parking brake cable
② Clutch cable
③ Clutch switch lead
④ Handlebar switch lead
⑤ Front brake light switch lead
⑥ Throttle switch lead
⑦ Front brake hose
⑧ Throttle cable

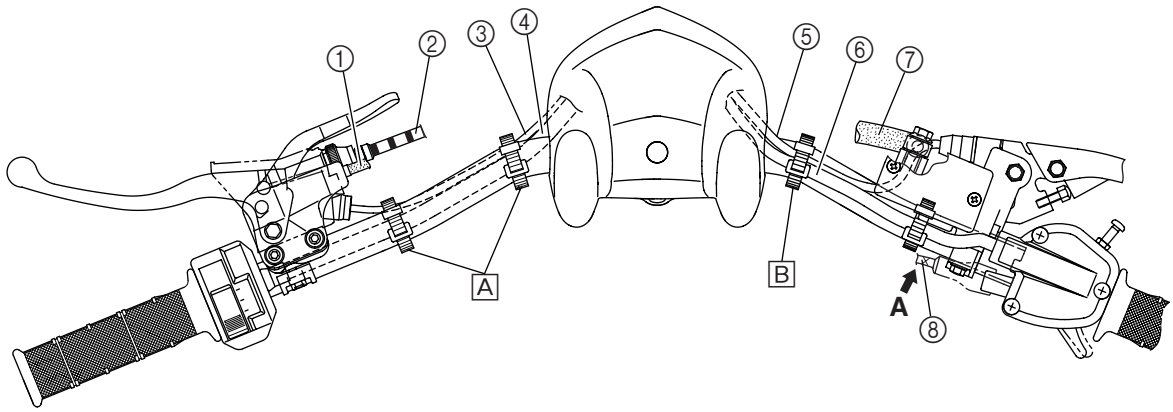

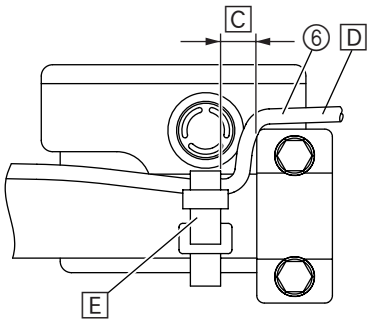

A

[A] Fasten the clutch switch lead and handlebar switch lead to the handlebar with the plastic band.
[B] Fasten the front brake light switch lead and throttle switch lead to the handlebar with the plastic band.
[C] Less than 10 mm (0.39 in)
[D] Make sure that there is no slack in the throttle switch lead.
[E] Fasten the throttle switch lead to the handlebar with the plastic band.

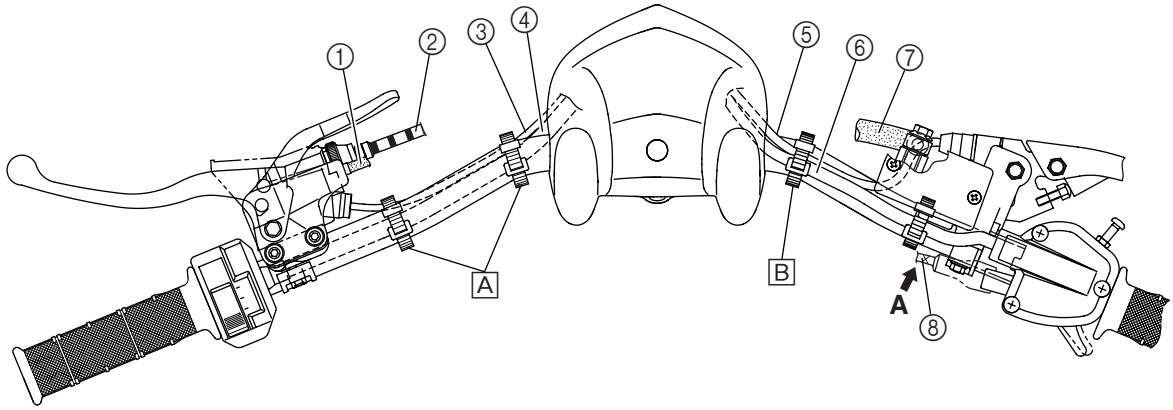

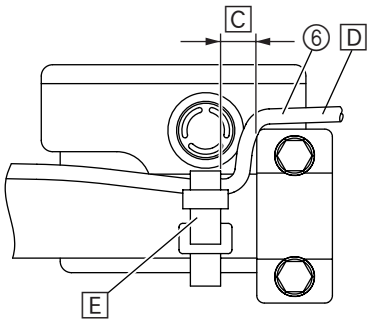

A

① Throttle cable
② Front brake hose
③ Front brake light switch lead
④ Throttle switch lead
⑤ Clutch cable
⑥ Parking brake cable
⑦ Clutch switch lead
⑧ Handlebar switch lead
⑨ Radiator fan breather hose
⑩ Thermo switch 2 lead
⑪ Headlight coupler (left)
⑫ C.D.I. unit leads
⑬ Rectifier/regulator coupler
⑭ Brake pipe
⑮ Rectifier/regulator
⑯ C.D.I. unit
⑰ Diode 1
⑱ Diode 2
⑲ Thermo switch 1 lead
⑳ Headlight coupler (right)
㉑ Main switch coupler

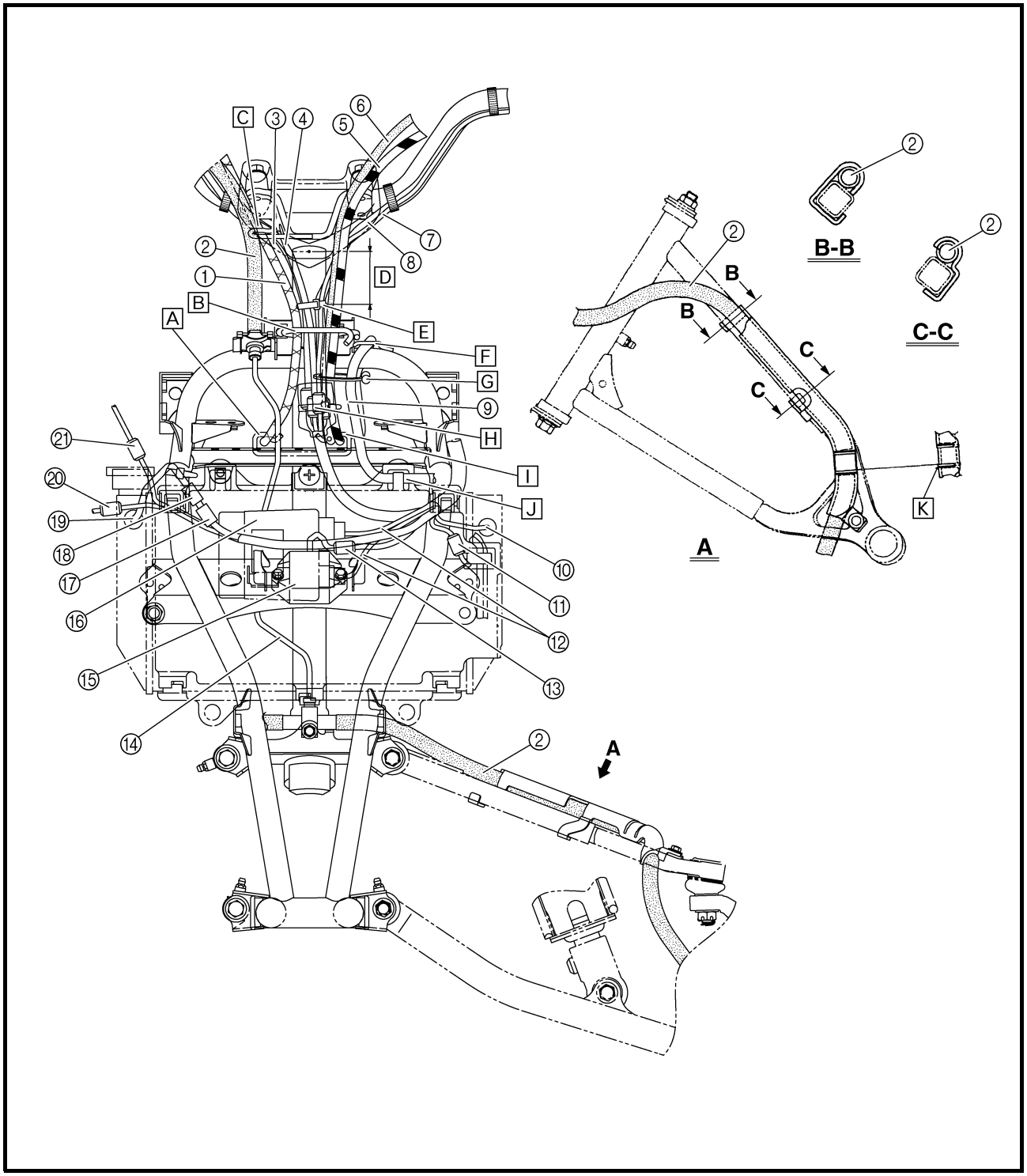

[A] Pass the throttle cable through the cable guide.
[B] Pass the throttle cable, leads (front brake light switch, throttle switch, clutch switch, and handlebar switch), parking brake cable, and clutch cable through the cable guide in the order listed.
[C] Pass the throttle cable through the steering stem cable guide.
[D] 30 ~ 50 mm (1.18 ~ 1.97 in)
[E] Fasten the front brake light switch lead, throttle switch lead, clutch switch lead, and handlebar switch lead with the plastic band and then place the end of the band under the fuel tank cover.
[F] Pass the radiator fan breather hose through the hose guide.
[G] Fasten the radiator fan breather hose, clutch cable, and parking brake cable with the clamp.

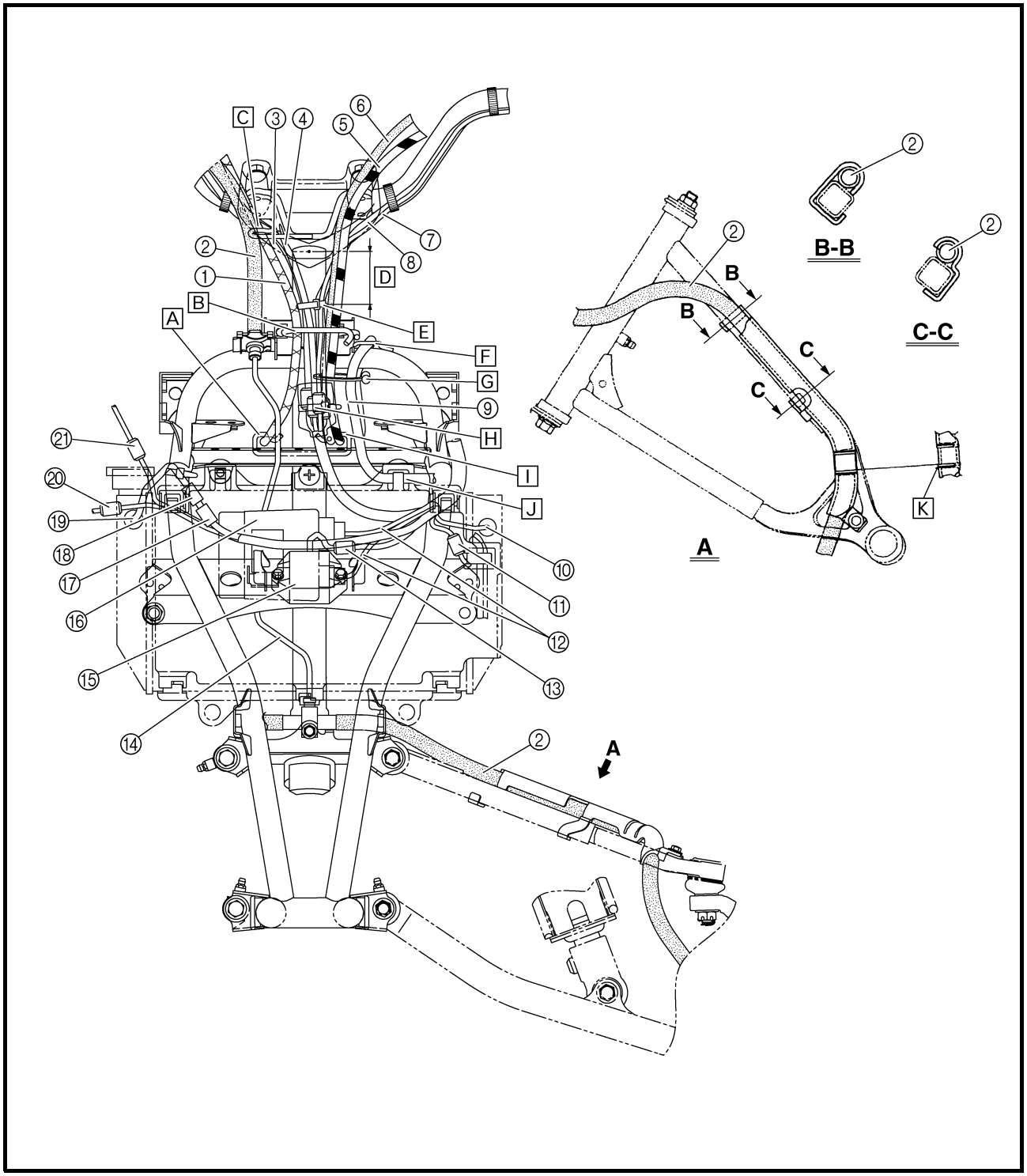

[H] Slide the rubber cover over the couplers (front brake light switch, throttle switch, clutch switch, and handlebar switch) and fasten the center of the cover with the plastic band.
[I] Pass the clutch cable and parking brake cable through the cable guide in this order.
[J] Fasten the radiator fan breather hose with the holder on the radiator grill.
[K] Install the brake hose cover so that the slits in the cover fit over the brake hose grommet.

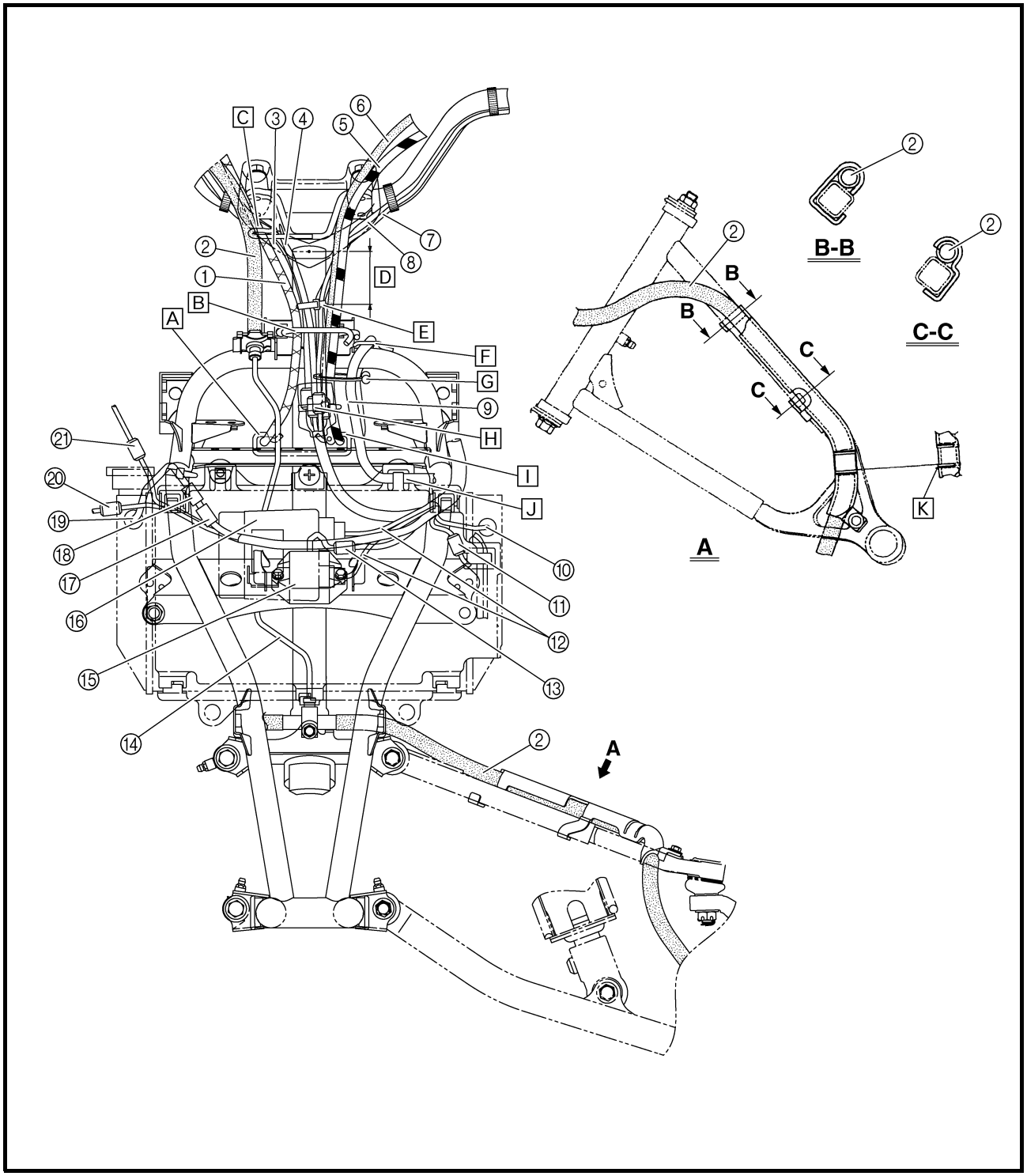

① Indicator coupler
② Radiator fan motor coupler
③ Thermo switch 2
④ Fuel tank breather hose
⑤ Radiator fan motor lead
⑥ Radiator fan breather hose
⑦ Wire harness
⑧ Fuel hose
⑨ Throttle position sensor lead
⑩ Carburetor switch lead
⑪ Crankcase breather hose
⑫ Battery negative lead
⑬ Starter motor lead
⑭ Neutral switch lead
⑮ A.C. magneto lead
⑯ Oil tank breather hose
⑰ Neutral switch coupler
⑱ A.C. magneto coupler
⑲ Front brake hose
⑳ Throttle cable
㉑ Parking brake cable
㉒ Clutch cable
㉓ Indicator leads
㉔ Cylinder head breather hose

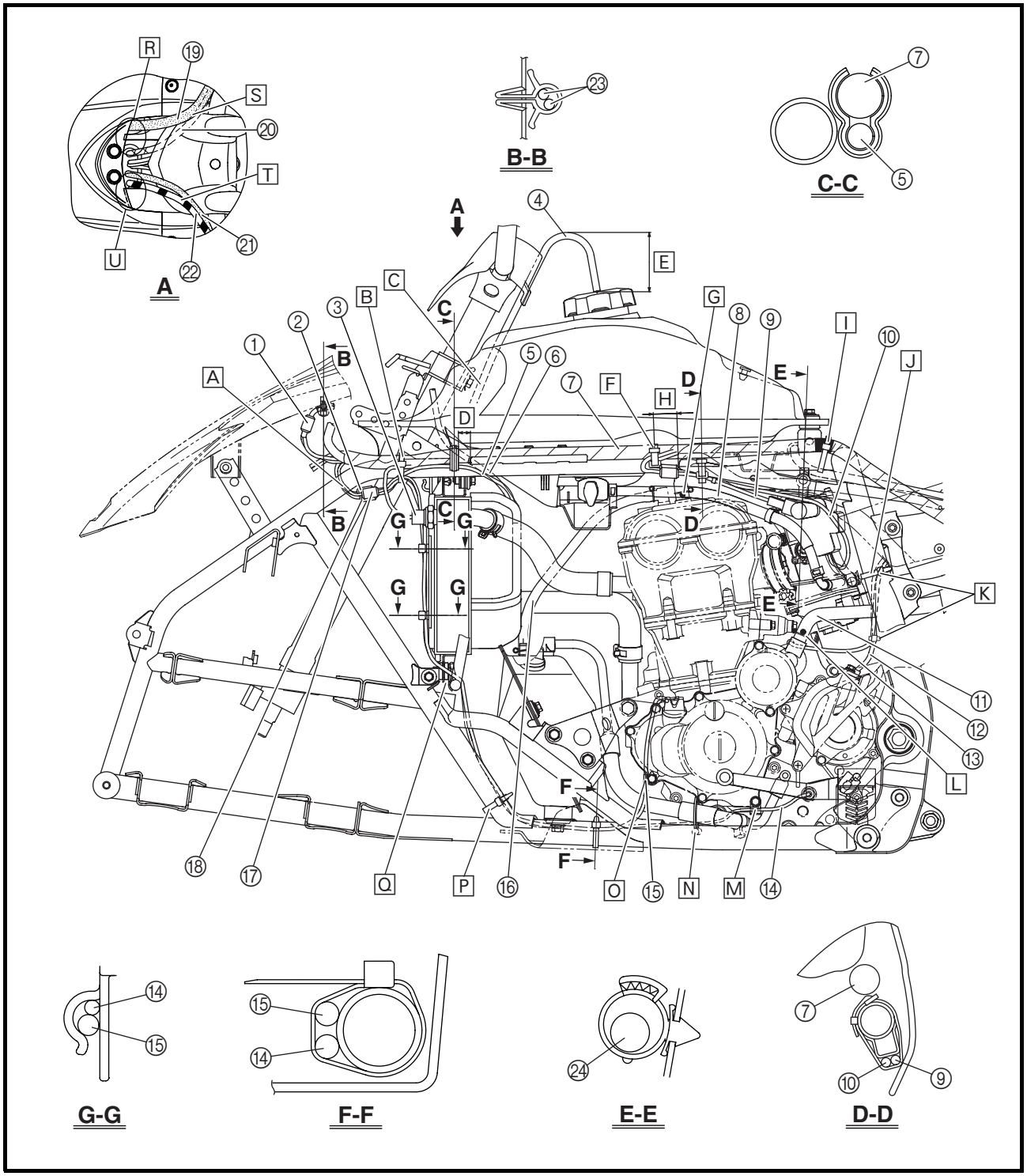

[A] Route the neutral switch lead, A.C. magneto lead, and radiator fan motor lead under the frame.
[B] Fasten the wire harness, thermo switch 2 lead, A.C. magneto lead, and neutral switch lead with the plastic band and then face the end of the band inward between the frame tubes.
[C] Route the fuel tank breather hose behind the steering stem.
[D] 7 ~ 21 mm (0.28 ~ 0.83 in)
[E] 50 ~ 70 mm (1.97 ~ 2.76 in)
[F] Fasten the wire harness, throttle position sensor lead, and carburetor switch lead with the plastic band. Make sure that there is no slack in the throttle position sensor lead and carburetor switch lead along the frame as shown.
[G] Install the cylinder head breather hose with the paint mark facing to the left.
[H] More than 15 mm (0.59 in)
[I] Fasten the wire harness with the plastic band on the white tape and then face the end of the plastic band inward.

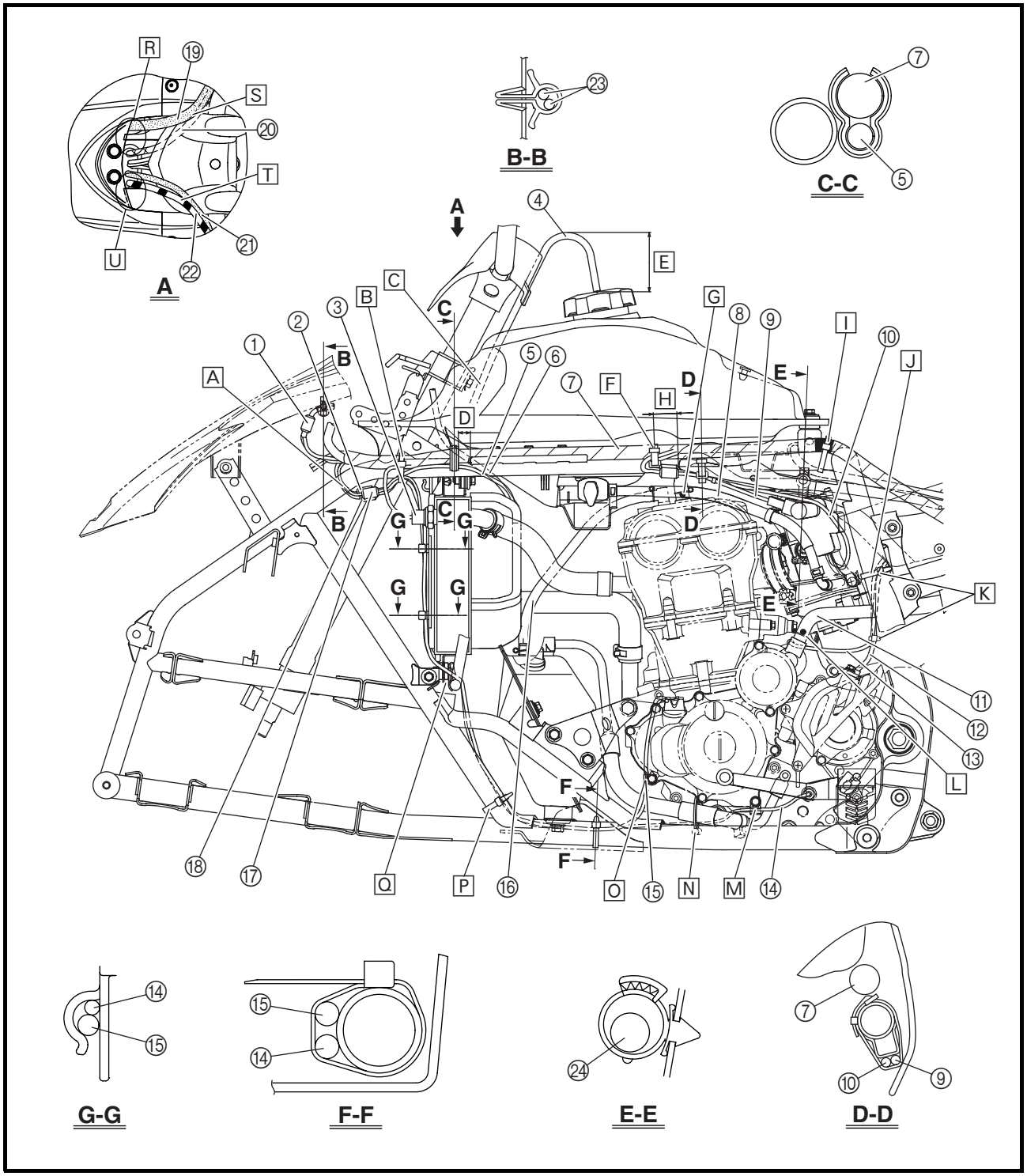

[J] Fasten the negative battery lead and starter motor lead with the plastic band and then face the end of the plastic band inward.
[K] Fasten the starter motor lead to the negative battery lead at the mark on the battery lead with a plastic band. Then, fasten the starter motor lead and negative battery lead to the frame with a plastic band and face the end of the band inward.
[L] Install the crankcase breather hose with the paint mark facing outward.
[M] Fasten the neutral switch lead with the lead holder.
[N] Fasten the neutral switch lead with the clamp.
[O] Fasten the A.C. magneto lead with the lead holder.
[P] Fasten the neutral switch lead and A.C. magneto lead with the plastic band. Face the end of the plastic band inward on top of the frame.
[Q] Pass the neutral switch lead and A.C. magneto lead through the guide on the fender stay.

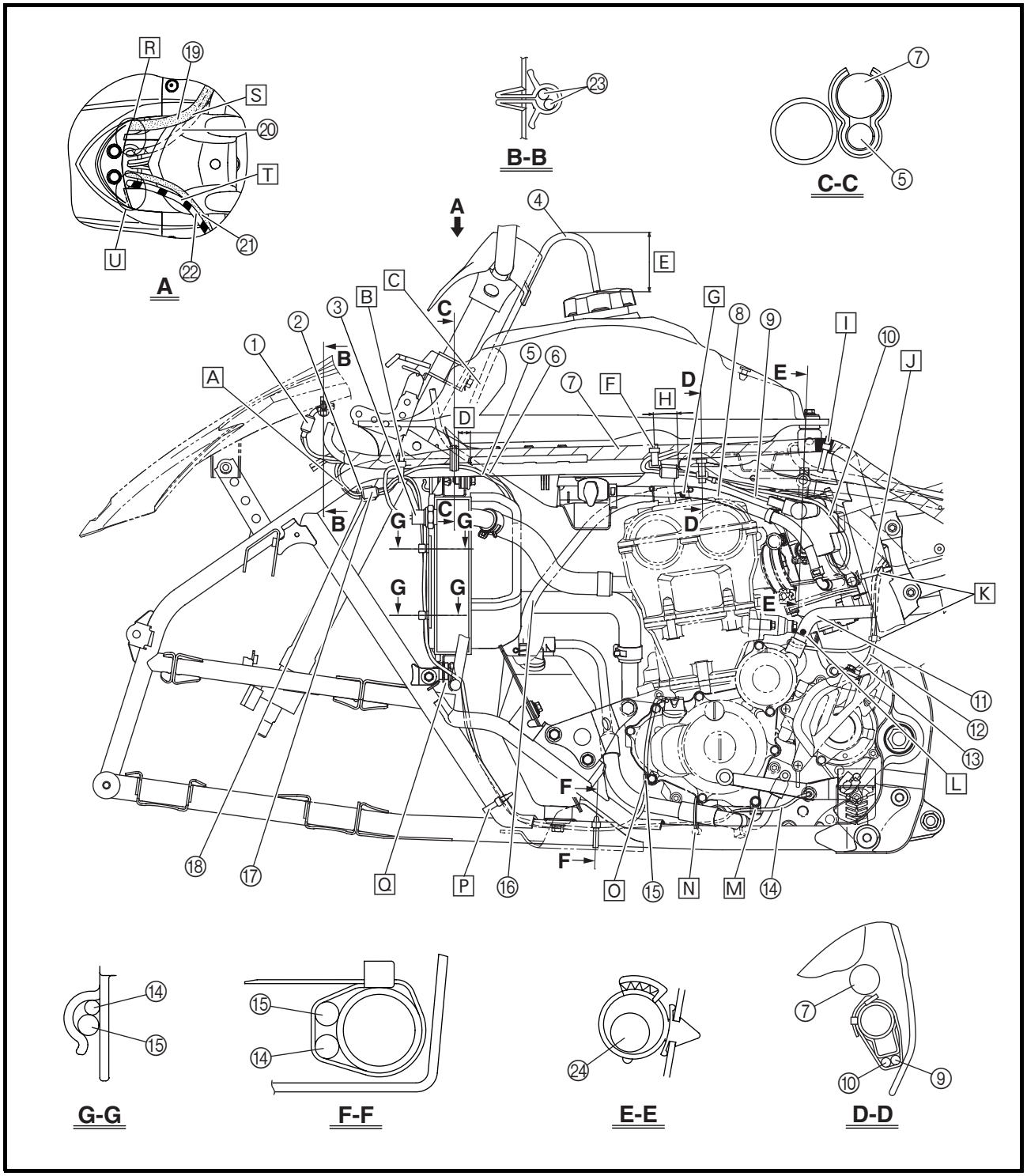

[R] When installing the fuel tank cover, do not pinch the front brake hose, throttle cable, front brake light switch lead, or throttle switch lead.
[S] Route the front brake hose in front of the handlebar cover.
[T] Route the clutch cable and parking brake cable in front of the handlebar cover.
[U] When installing the fuel tank cover, do not pinch the clutch cable, parking brake cable, clutch switch lead, or handlebar switch lead.

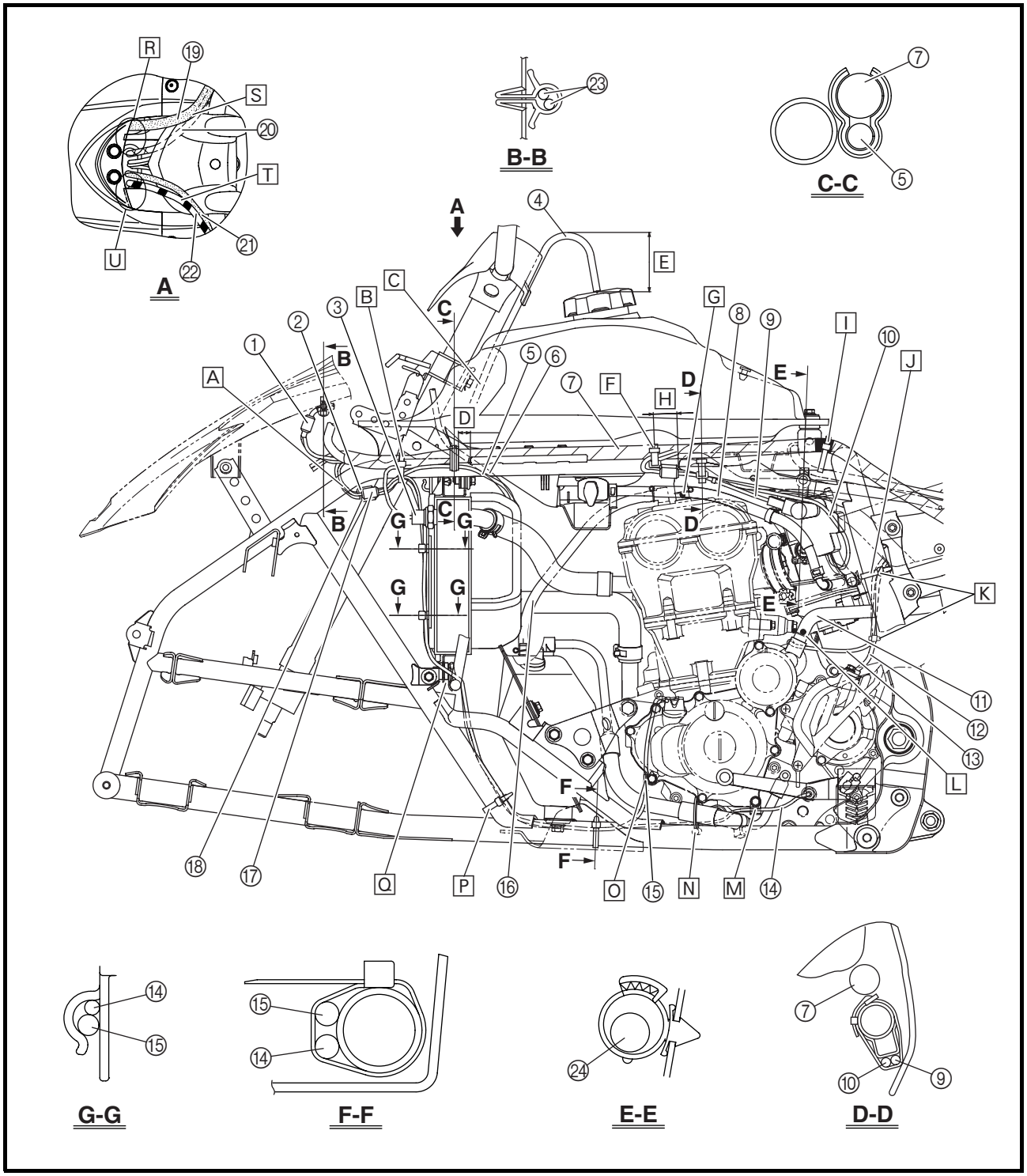

① Wire harness
② Air filter case breather hose
③ Cylinder head breather hose
④ Coolant reservoir breather hose
⑤ Coolant reservoir hose
⑥ Tail/brake light
⑦ Tail/brake light lead
⑧ Crankcase breather hose
⑨ Carburetor drain hose
⑩ Carburetor air vent hose
⑪ Battery negative lead
⑫ Starter motor lead

A When installing the rear fender, make sure that the rear fender does not overlap or pinch the cylinder head breather hose, coolant reservoir hose, or wire harness.
B Install the air filter case breather hose with the paint mark facing outward.
C Install the cylinder head breather hose with the paint mark facing outward.

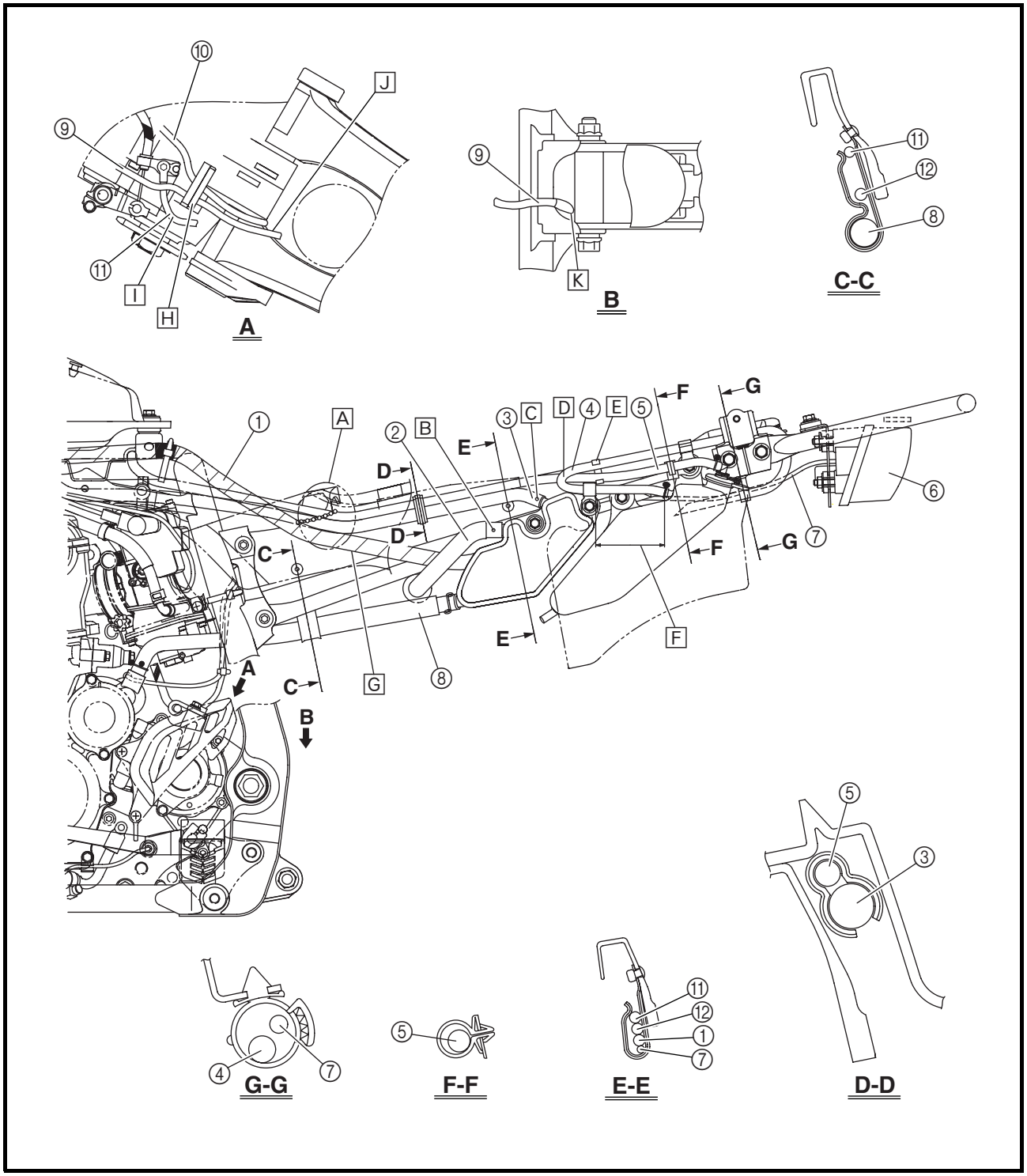

[D] Install the coolant reservoir breather hose without twisting the hose.
[E] Fasten the coolant reservoir hose and the coolant reservoir breather hose with a clamp. Do not pinch the coolant reservoir breather hose.
[F] Install the coolant reservoir breather hose as shown so that there is no slack.
[G] Install the wire harness so that it does not hang from the rear fender.
[H] Pass the carburetor drain hose and carburetor air vent hoses through the hose guide on the engine from the left side of the machine in the order listed. Do not pinch the hoses.
[I] Route the negative battery lead to the outside of the carburetor air vent hose and to the inside of the carburetor drain hose.
[J] Route the carburetor drain hose between the rear shock absorber and swingarm, and then under the frame.

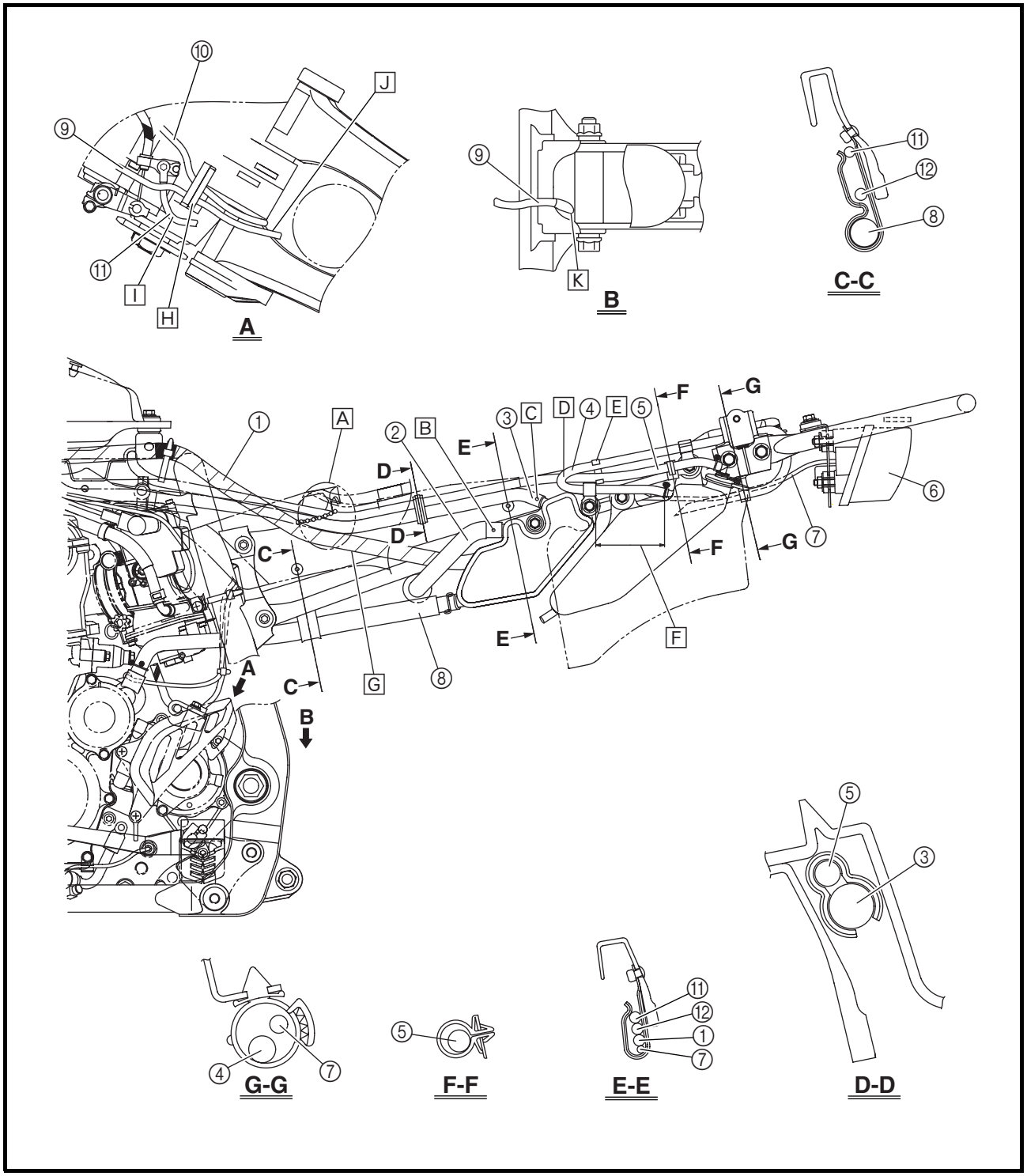

[K] Route the carburetor drain hose between the frame and connecting arm and let it hang freely under the vehicle.

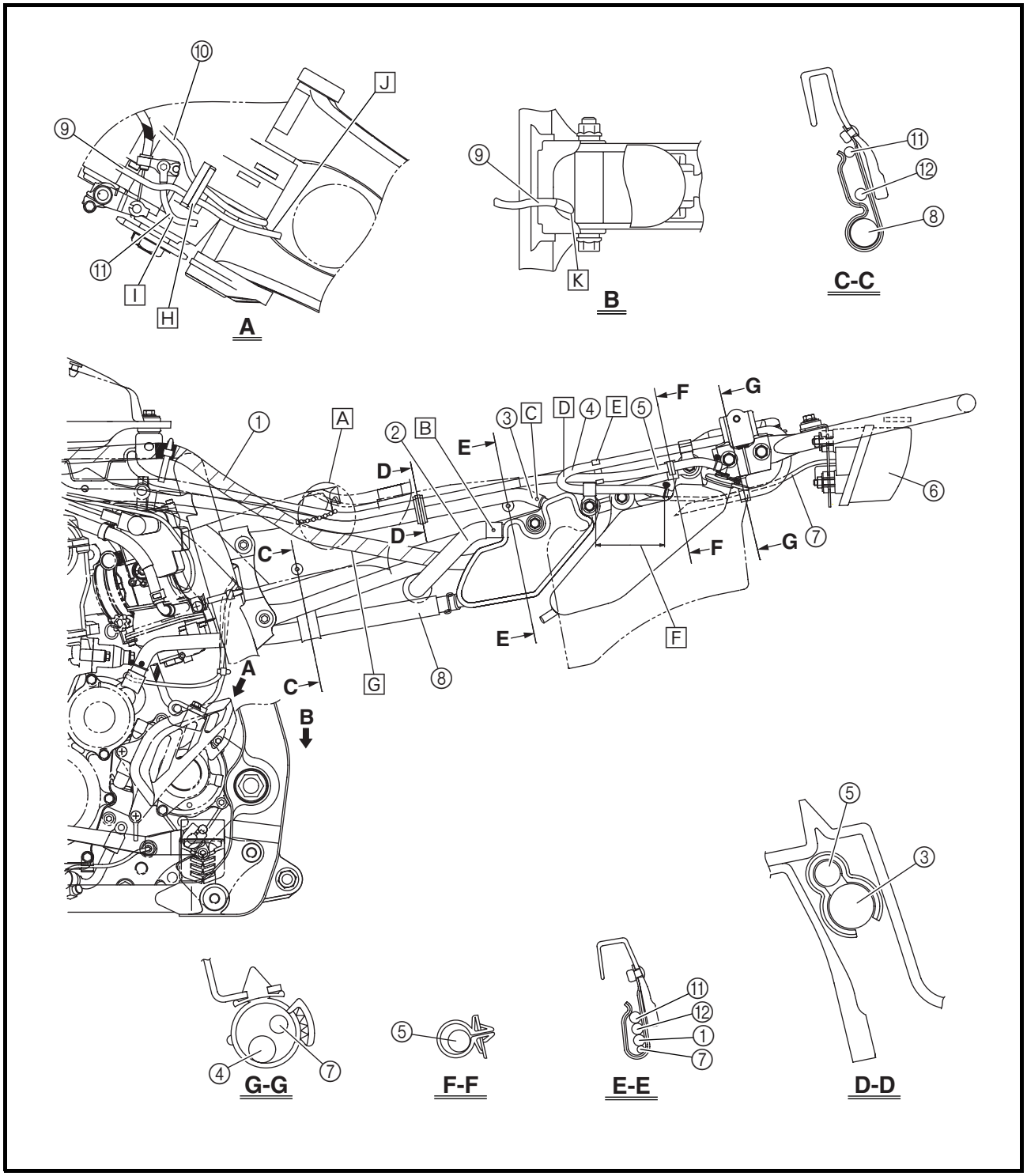

① Rear brake light switch lead
② Throttle cable
③ Clutch cable
④ Coolant reservoir hose
⑤ Oil tank breather hose
⑥ Thermo switch 1 lead
⑦ Parking brake cable

A Fasten the coolant reservoir hose with a clamp so that it is not pinched.
B Route the thermo switch 1 lead under the frame.
C Fasten the thermo switch 1 lead with a plastic band between the diode 1 and the diode 2 and then face the end of the band inward.
D Pass the parking brake cable through the cable guide.

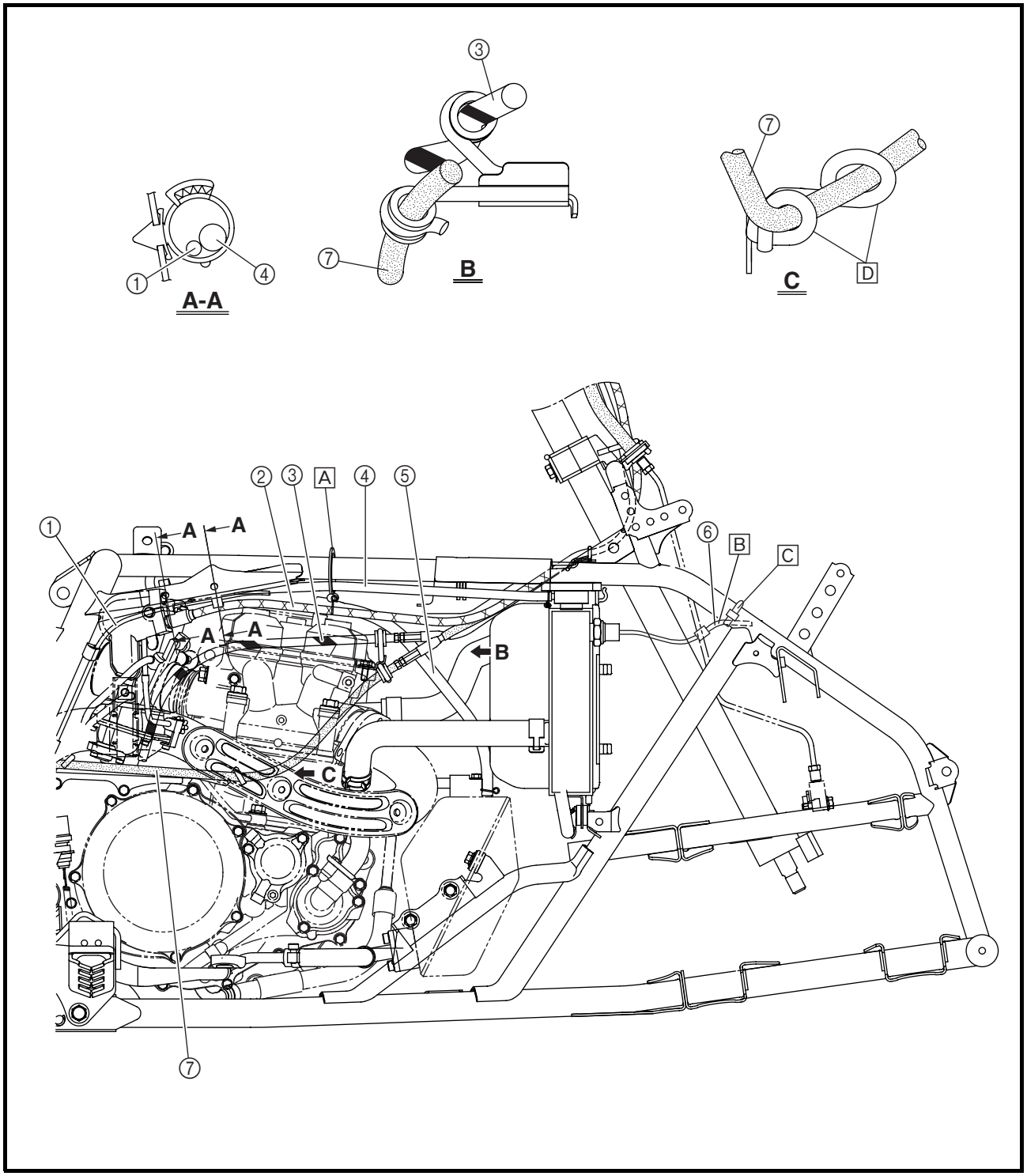

① Rear brake hose
② Parking brake cable
③ Rear brake light switch
④ Rear brake light switch lead

A Install the lead protector of the rear brake light switch lead between the clamps.
B Face the rear brake light switch lead holder inward and then fasten the lead with the holder.

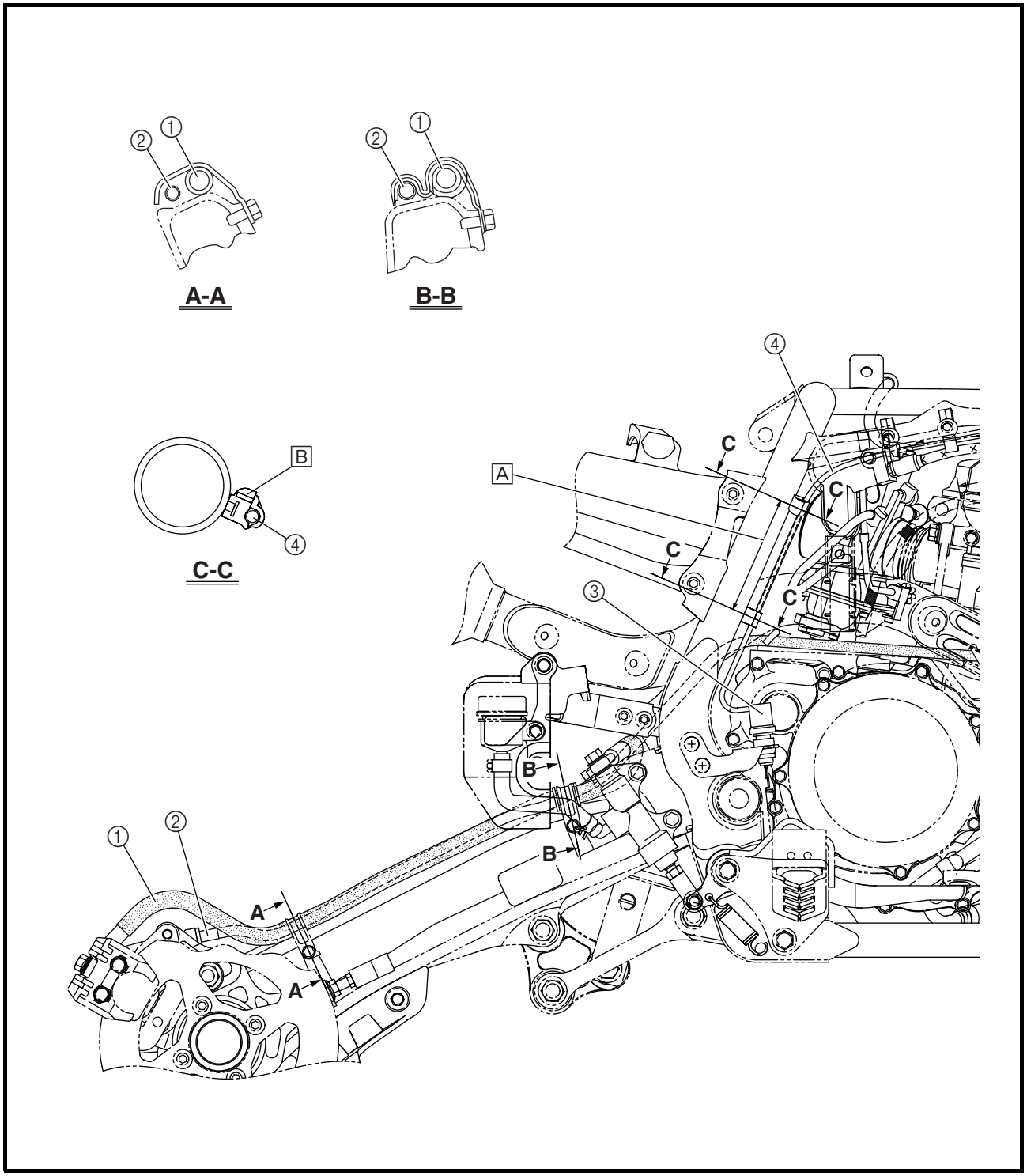

① Rectifier/regulator
② Headlight lead (right)
③ Main switch lead
④ Thermo switch 1 lead
⑤ Coolant reservoir hose
⑥ Oil tank breather hose
⑦ Throttle cable
⑧ Ignition coil lead
⑨ Rear brake light switch lead
⑩ Cylinder head breather hose
⑪ Carburetor switch lead
⑫ Throttle position sensor lead
⑬ Wire harness
⑭ Headlight lead (left)
⑮ C.D.I. unit

A Route the wire harness on top of the frame.
B Route the headlight lead (right) over the frame and connect. After connecting the lead to the headlight, place the headlight coupler behind the headlight toward the center of the vehicle.

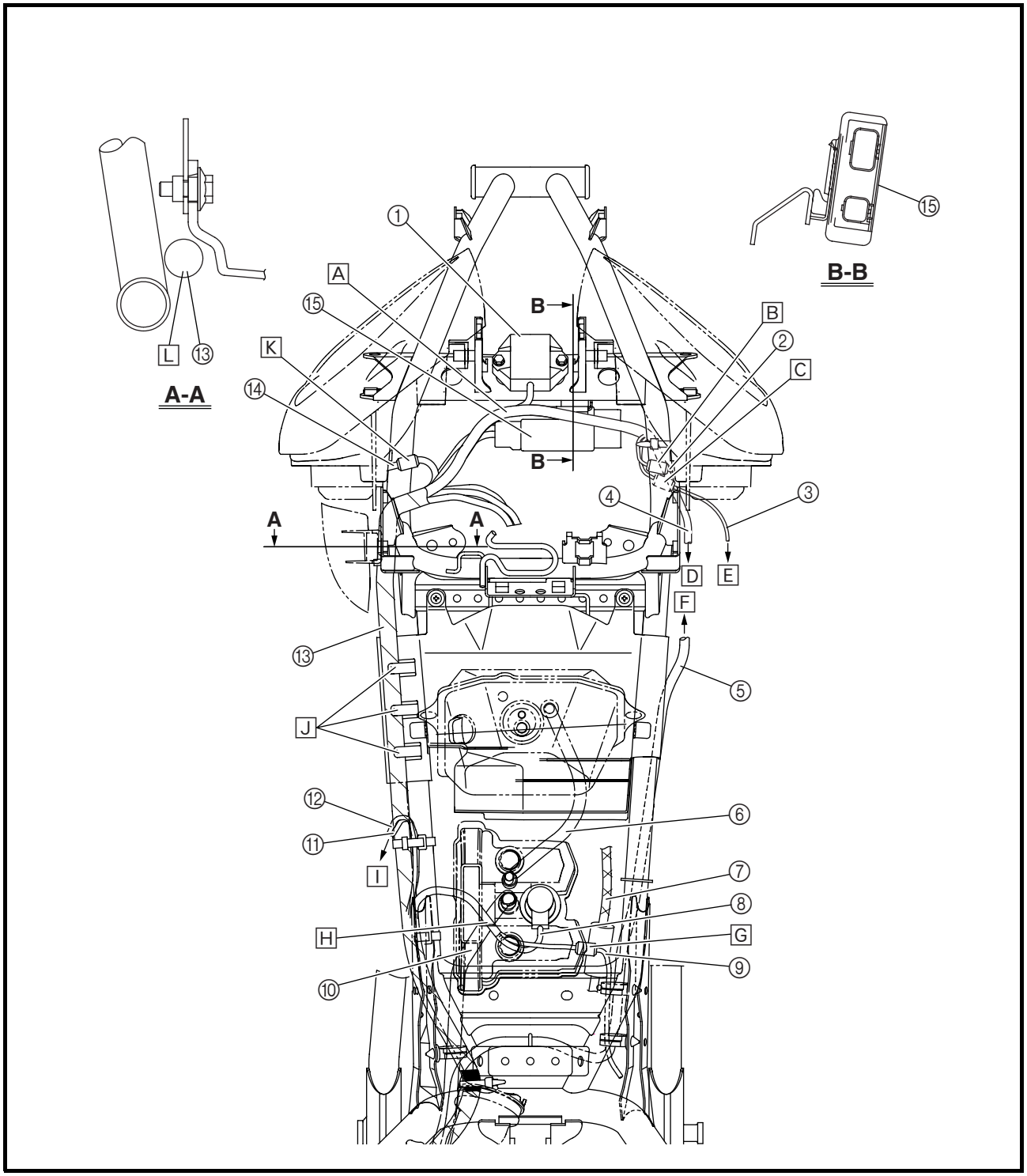

[C] Route the main switch lead under the frame and connect.
[D] To thermo switch 1
[E] To main switch
[F] To radiator
[G] Route the rear brake light switch lead over the throttle cable.
[H] Route the rear brake light switch lead and ignition coil lead over the cylinder head breather hose.
[I] To carburetor
[J] Fasten the wire harness with the holder on the shield under the fuel tank.
[K] Route the headlight lead (left) over the frame and connect. After connecting the lead to the headlight, place the headlight coupler behind the headlight toward the center of the vehicle.
[L] When installing the left side cover, do not pinch the wire harness.

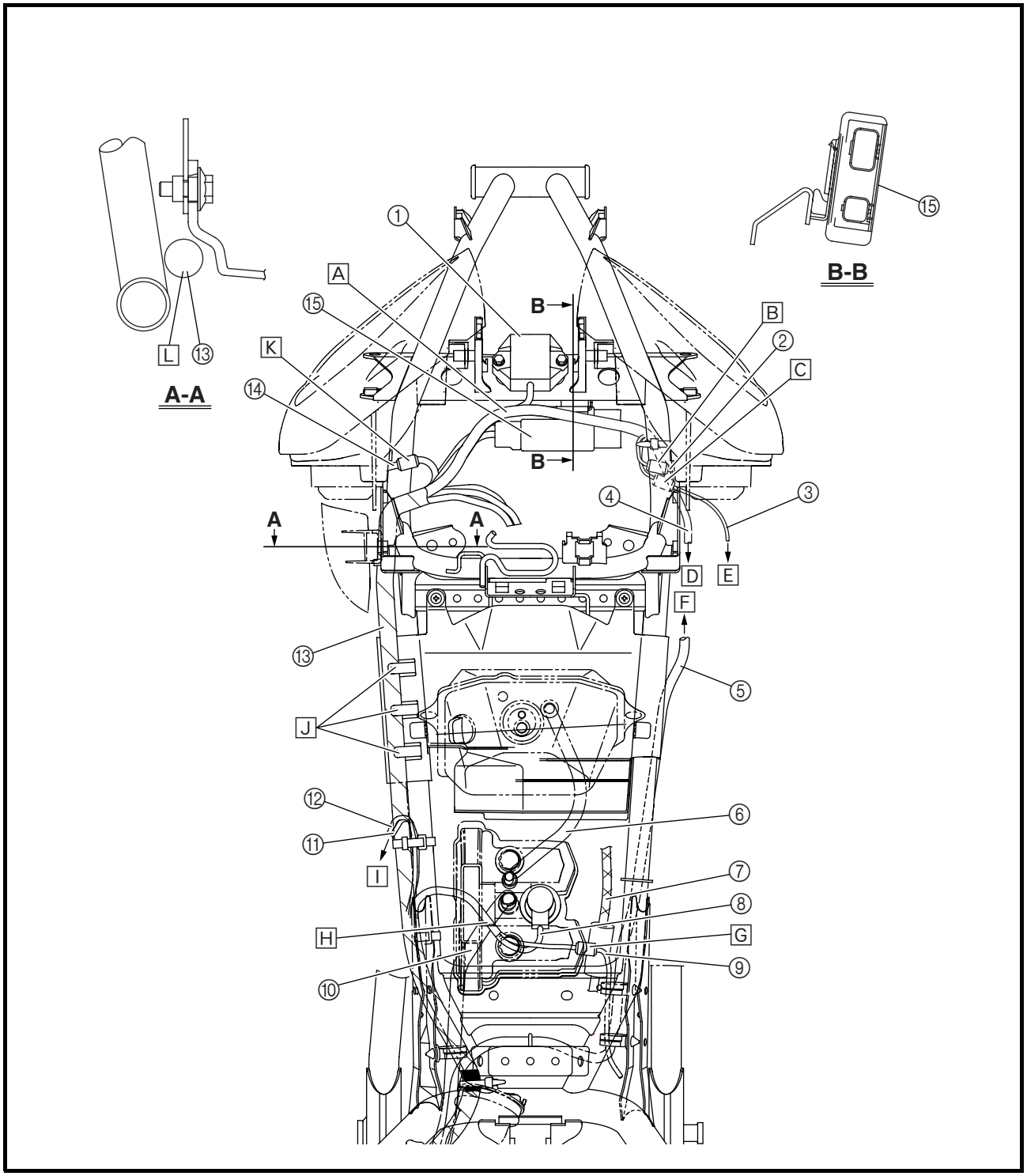

① Starter relay
② Battery positive lead
③ Tail/brake light lead
④ Starter motor lead
⑤ Starting circuit cut-off relay
⑥ Earth lead
⑦ Battery negative lead
⑧ Coolant reservoir hose
⑨ Cylinder head breather hose
⑩ Wire harness

A Pass the coolant reservoir hose through the hose guide.
B Route the earth lead and wire harness under the battery bracket.
C Connect the tail/brake light lead between the coolant reservoir and the rear fender.
D Pass the wire harness through the notch in the rear fender. Be sure that the rear fender and air filter case do not pinch the wire harness.

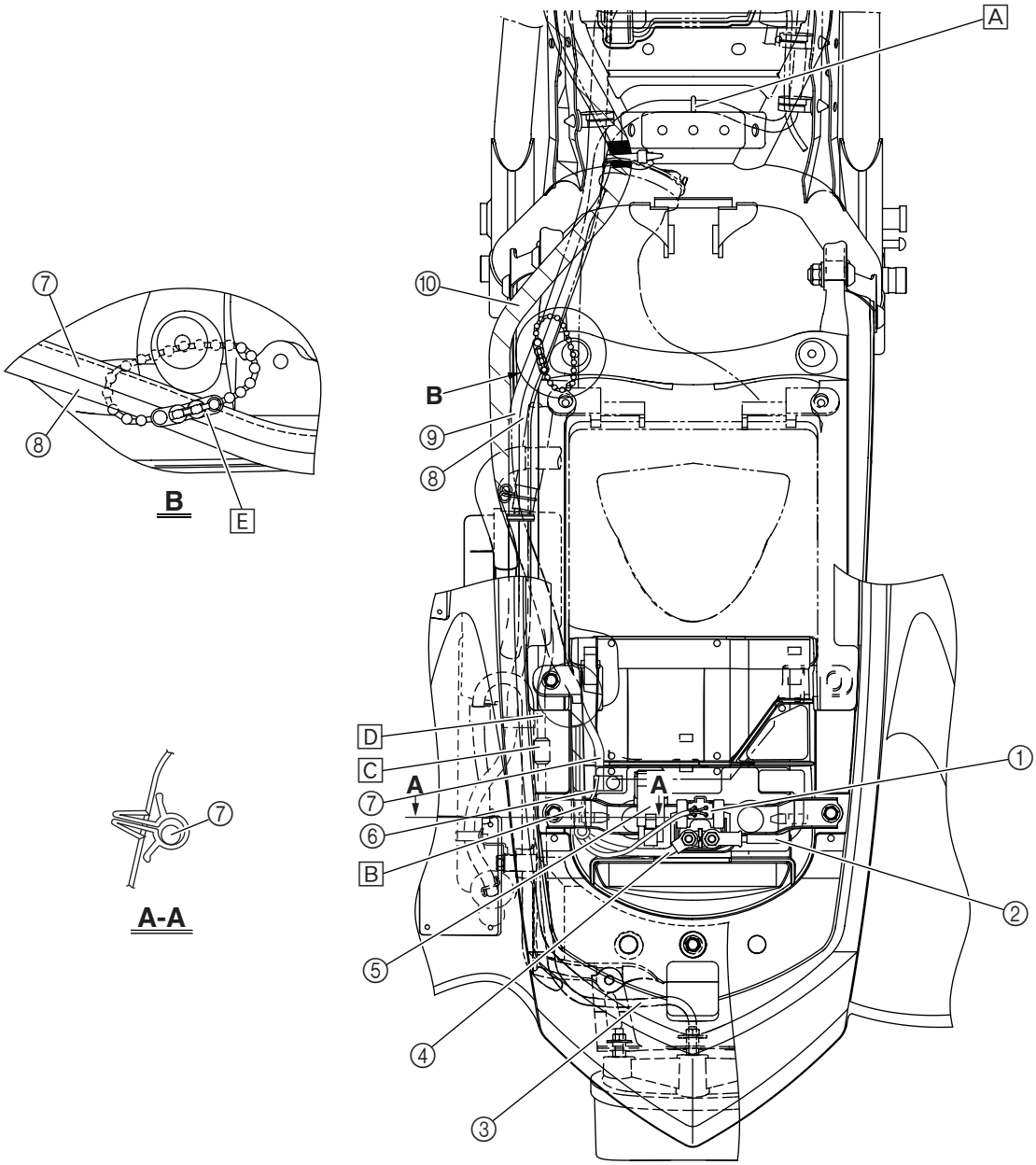

[E] Fasten the coolant reservoir hose and the cylinder head breather hose to the frame with the plastic beaded tie at its loosest position so that the hoses are not pinched.

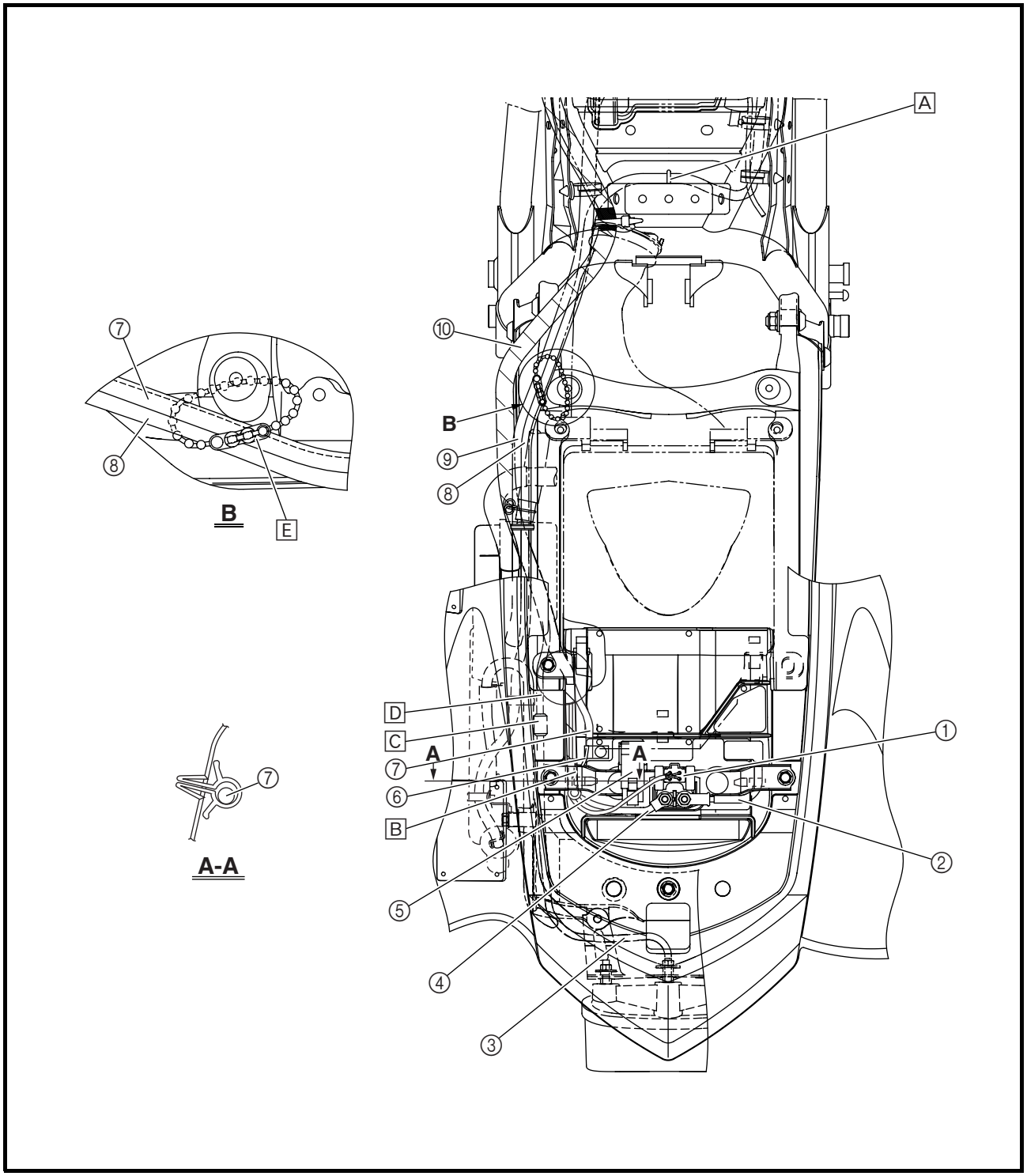

CHK
ADJ

3

CHAPTER 3
PERIODIC CHECKS AND ADJUSTMENTS

EBS00029

PERIODIC CHECKS AND ADJUSTMENTS

INTRODUCTION

This chapter includes all information necessary to perform recommended checks and adjustments. These preventive maintenance procedures, if followed, will ensure more reliable machine operation and a longer service life. The need for costly overhaul work will be greatly reduced. This information applies to machines already in service as well as to new machines that are being prepared for sale. All service technicians should be familiar with this entire chapter.

EBS00030

PERIODIC MAINTENANCE/LUBRICATION

ITEM	ROUTINE	INITIAL			EVERY	
		1 month	3 months	6 months	6 months	1 year
Valves*	• Check valve clearance. • Adjust if necessary.	○		○	○	○
Cooling system	• Check for coolant leakage. • Repair if necessary. • Replace coolant every 24 months.	○	○	○	○	○
Spark plug	• Check condition. • Adjust gap and clean. • Replace if necessary.	○	○	○	○	○
Air filter element	• Clean. • Replace if necessary.	Every 20~40 hours (More often in wet or dusty areas.)				
Carburetor*	• Check starter (choke) operation. • Adjust engine idling speed.		○	○	○	○
Crankcase breather system*	• Check breather hose for cracks or damage. • Replace if necessary.			○	○	○
Exhaust system*	• Check for leakage. • Tighten if necessary. • Replace gasket if necessary.			○	○	○
Fuel line*	• Check fuel hose for cracks or damage. • Replace if necessary.			○	○	○
Engine oil	• Replace (Warm engine before draining).	○		○	○	○
Engine oil filter element	• Replace.	○		○		○
Drive chain	• Check and adjust slack/alignment/clean/lube.	○	○	○	○	○
Front brake*	• Check free play/operation/fluid leakage/See NOTE. • Correct if necessary.	○	○	○	○	○
Rear brake*	• Check operation/fluid leakage/See NOTE. • Correct if necessary.	○	○	○	○	○
Clutch*	• Check operation. • Adjust if necessary.	○		○	○	○
Wheels*	• Check balance/damage/runout. • Replace if necessary.	○		○	○	○
Wheel bearings*	• Check bearing assemblies for looseness/damage. • Replace if damaged.	○		○	○	○
Steering system*	• Check operation. • Repair if damaged. • Check toe-in. • Adjust if necessary.	○	○	○	○	○
Front and rear suspension*	• Check operation. • Correct if necessary.			○		○
Upper and lower arm pivot and steering shaft*	• Lubricate every 6 months with lithium-soap-based grease.			○	○	○
Rear arm pivot*	• Lubricate every 6 months with lithium-soap-based grease.			○	○	○

CHK ADJ

ITEM	ROUTINE	INITIAL			EVERY	
		1 month	3 months	6 months	6 months	1 year
Fittings and fasteners*	• Check all chassis fittings and fasteners. • Correct if necessary.	○	○	○	○	○
Lights and switches*	• Check operation. • Adjust headlight beams.	○	○	○	○	○

* Since these items require special tools, data and technical skills, have a Yamaha dealer perform the service.

EBS00031

NOTE:

- Recommended brake fluid: DOT4
- Brake fluid replacement:

1. When disassembling the master cylinder or caliper cylinder, replace the brake fluid. Normally check the brake fluid level and add fluid as required.
2. On the inner parts of the master cylinder and caliper cylinder, replace the oil seals every two years.
3. Replace the brake hoses every four years, or if cracked or damaged.

WARNING

Indicates a potential hazard that could result in serious injury or death.

EBS00033

SEAT, FENDERS AND FUEL TANK

SEAT, FUEL TANK COVER AND SIDE COVERS

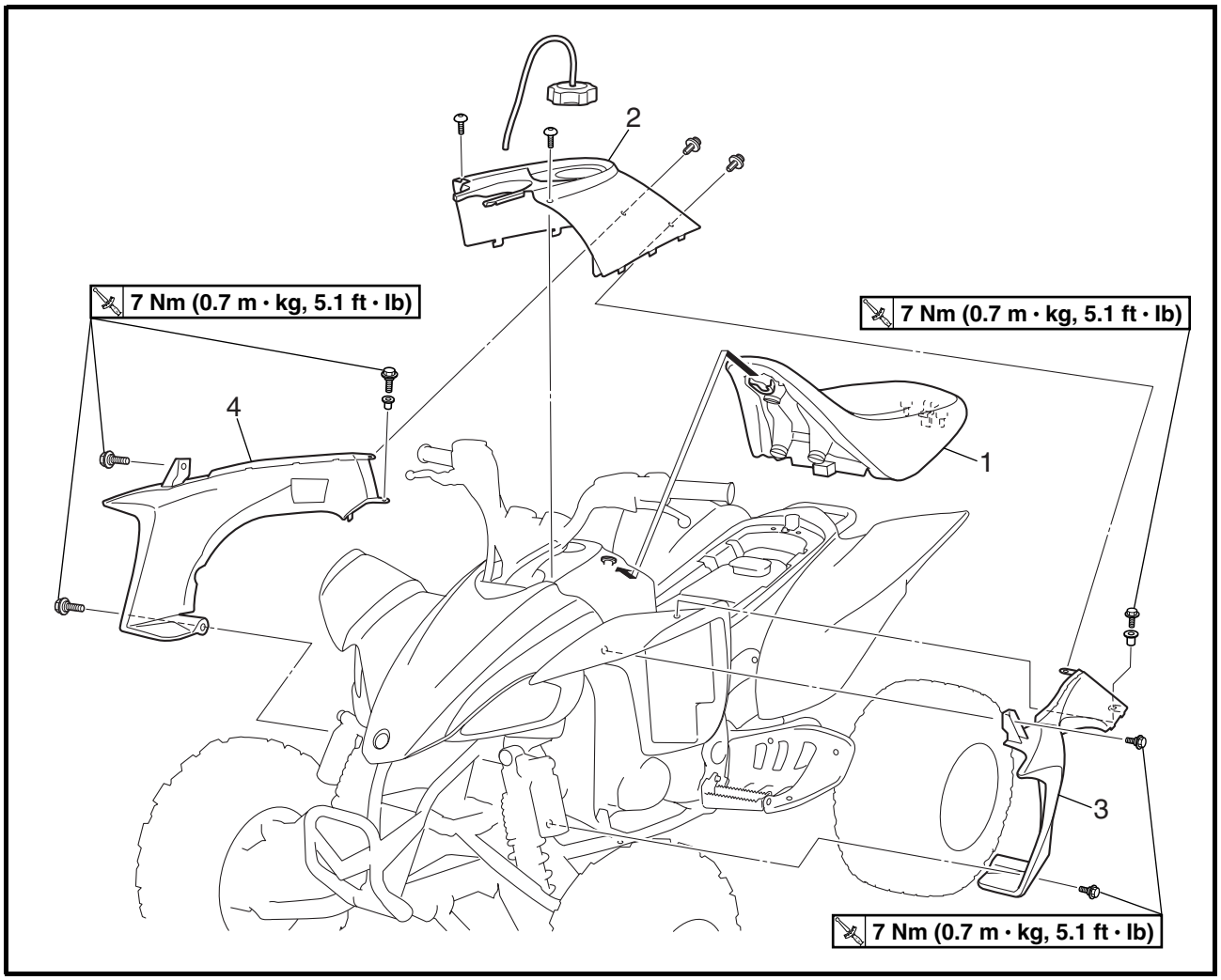

Order	Job/Part	Q'ty	Remarks
	Removing the seat, fuel tank cover and side covers		Remove the parts in the order listed.
1	Seat	1	**NOTE:** Pull back the seat lock lever, than pull up on the rear of the seat.
2	Fuel tank cover	1	
3	Left side cover	1	
4	Right side cover	1	For installation, reverse the removal procedure.

EBS00034

FOOT PROTECTORS AND ENGINE SKID PLATE

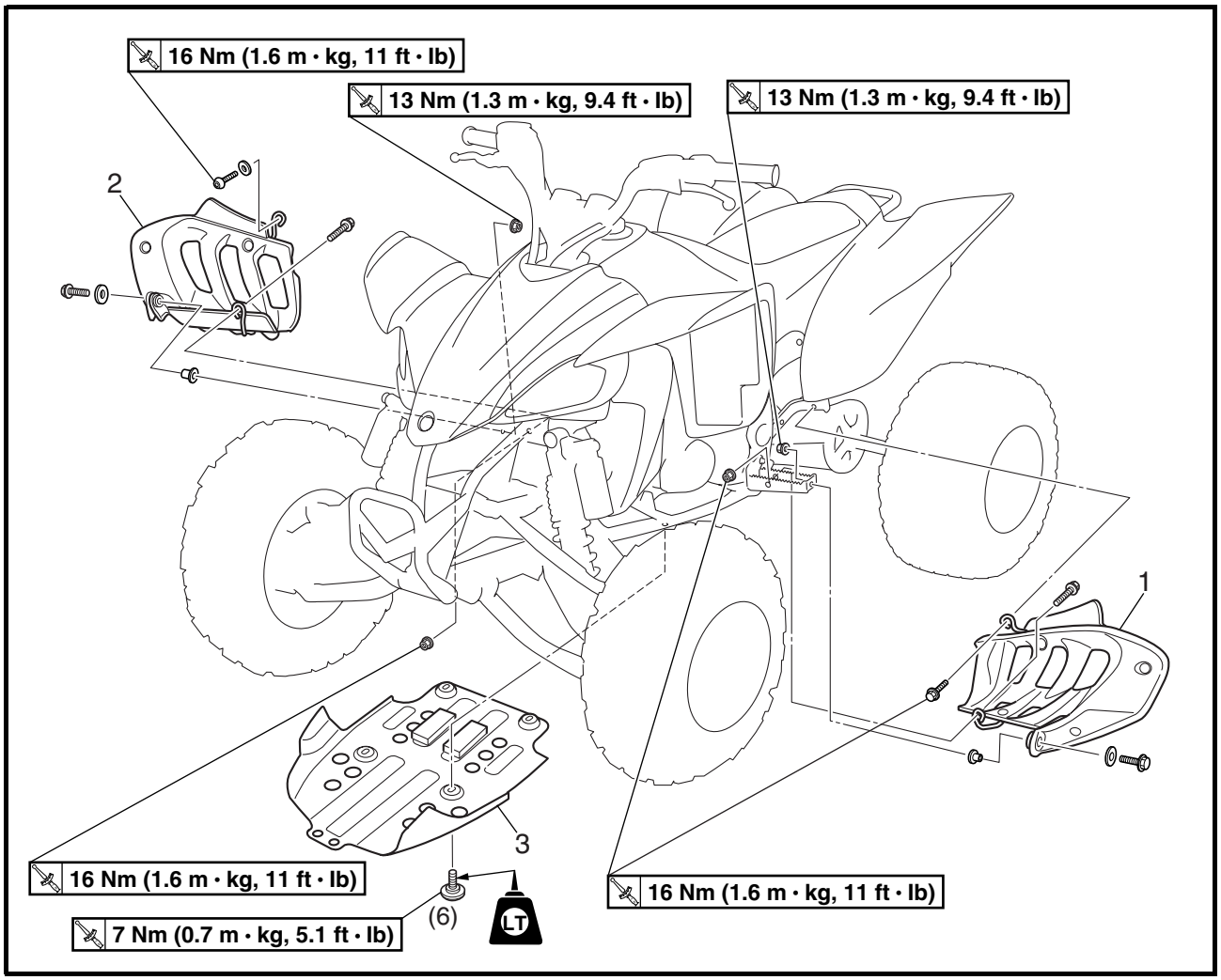

Order	Job/Part	Q'ty	Remarks
	Removing the foot protectors and engine skid plate		Remove the parts in the order listed.
1	Left foot protector	1	
2	Right foot protector	1	
3	Engine skid plate	1	
			For installation, reverse the removal procedure.

EBS00036

HEADLIGHTS AND FRONT FENDER

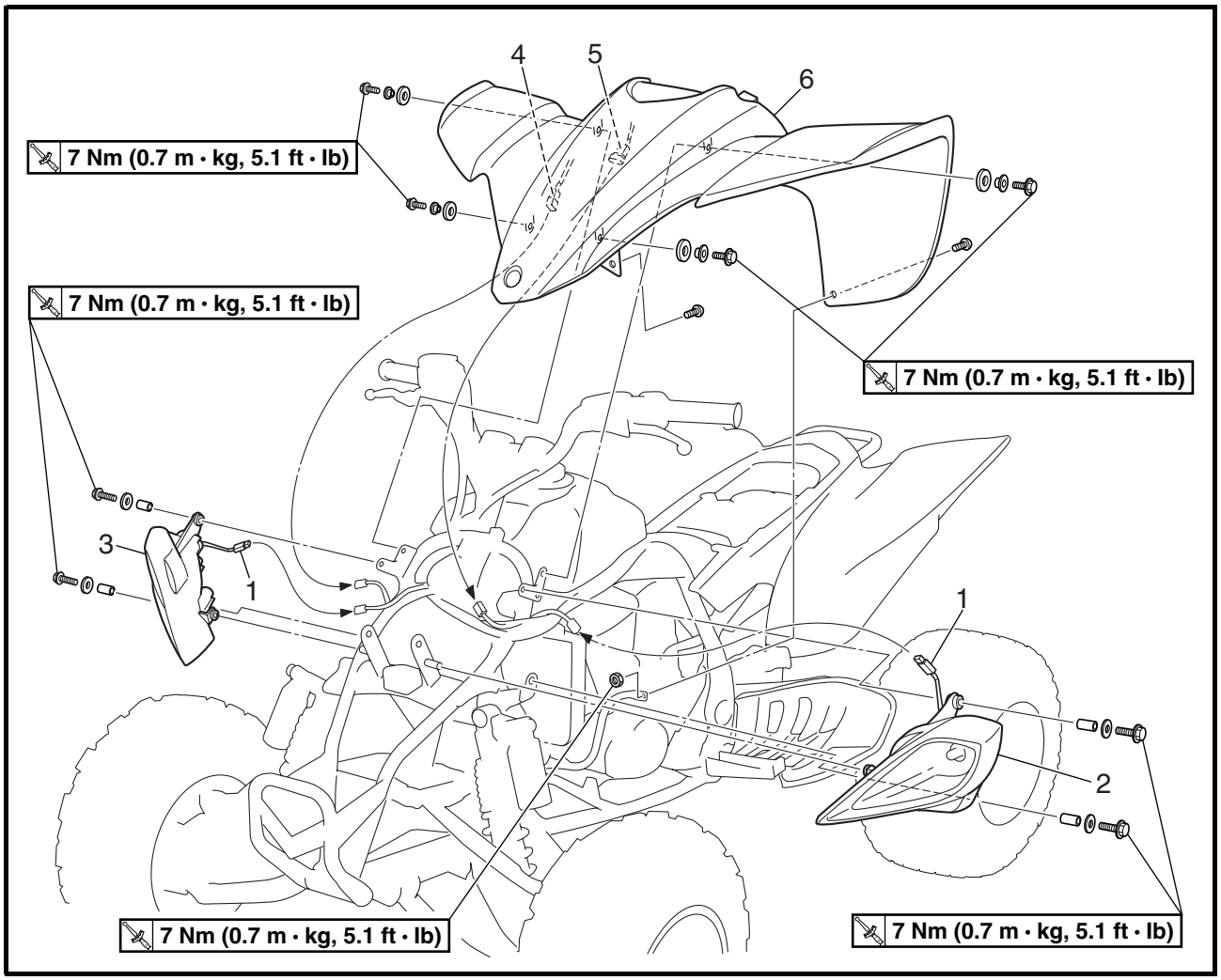

Order	Job/Part	Q'ty	Remarks
	Removing the headlight and front fender		Remove the parts in the order listed.
	Seat/fuel tank cover/side covers (left and right)		Refer to "SEAT, FENDERS AND FUEL TANK".
1	Headlight coupler	2	Disconnect.
2	Left headlight	1	
3	Right headlight	1	
4	Main switch coupler	1	Disconnect.
5	Indicator light coupler	1	Disconnect.
6	Front fender	1	
			For installation, reverse the removal procedure.

EBS00039
REAR FENDER

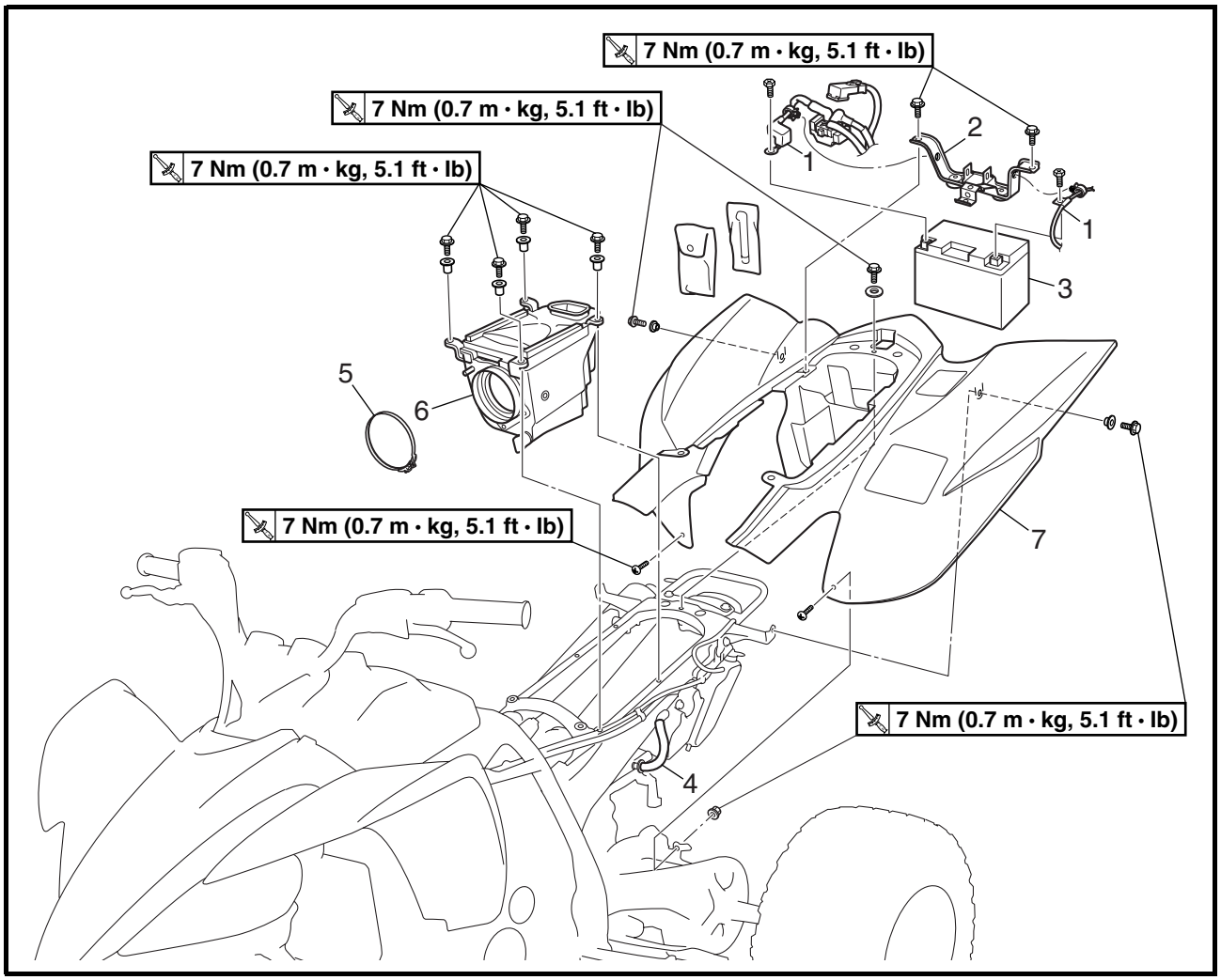

Order	Job/Part	Q'ty	Remarks
	Removing the rear fender		Remove the parts in the order listed.
	Seat/fuel tank cover/side covers (left and right)		Refer to "SEAT, FENDERS AND FUEL TANK".
1	Battery lead	2	**CAUTION:** **First disconnect the negative lead, then disconnect the positive lead.**
2	Battery holding bracket	1	
3	Battery	1	
4	Air filter case breather hose	1	Disconnect.
5	Clamp	1	Loosen.
6	Air filter case	1	
7	Rear fender	1	
			For installation, reverse the removal procedure.

EBS00042
FUEL TANK

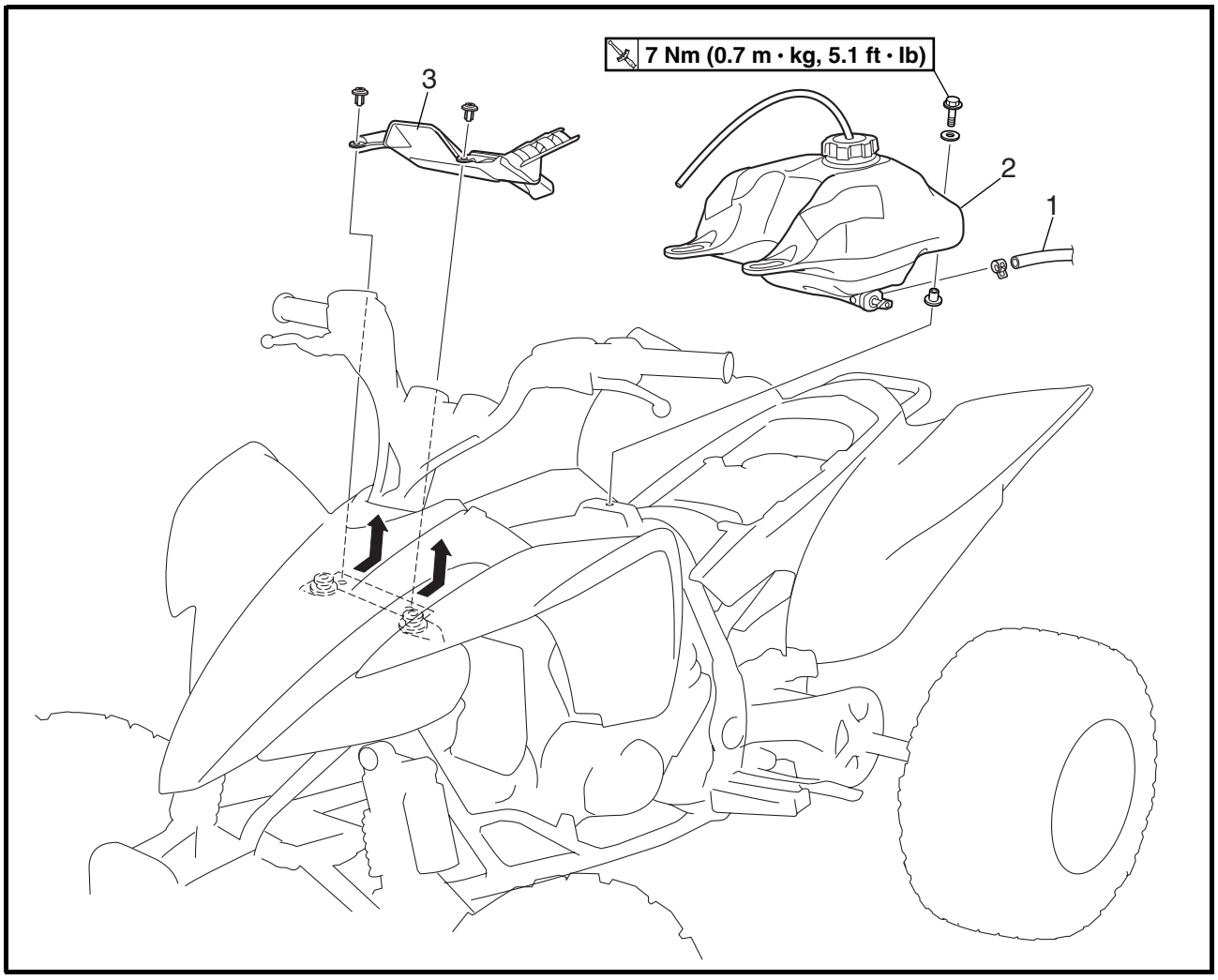

Order	Job/Part	Q'ty	Remarks
	Removing the fuel tank Seat/fuel tank cover/side covers (left and right)		Remove the parts in the order listed. Refer to "SEAT, FENDERS AND FUEL TANK".
1	Fuel hose (fuel cock side)	1	**NOTE:** Before disconnecting the fuel hose, turn the fuel cock to "OFF".
2	Fuel tank	1	**NOTE:** When installing the fuel tank, pass the fuel tank breather hose through the hole in the handlebar cover.
3	Fuel tank shield	1	For installation, reverse the removal procedure.

EAS00048

ENGINE

ADJUSTING THE VALVE CLEARANCE

The following procedure applies to all of the valves.

NOTE:

- Valve clearance adjustment should be made on a cold engine, at room temperature.
- When the valve clearance is to be measured or adjusted, the piston must be at the Top Dead Center (TDC) on the compression stroke.

1. Remove:
   - seat
   - fuel tank cover
   - side covers (left and right)
   - fuel tank
     Refer to “SEAT, FENDERS AND FUEL TANK”.

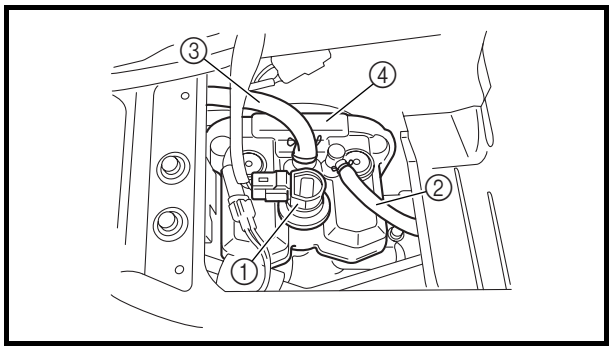

2. Remove:
   - ignition coil ①
   - oil tank breather hose ②
   - cylinder head breather hose ③
   - spark plug
   - cylinder head cover ④

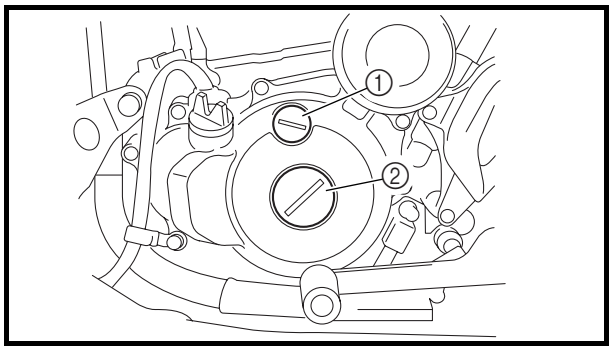

3. Remove:
   - timing mark accessing screw ①
   - crankshaft end accessing screw ②
4. Measure:
   - valve clearance
     Out of specification → Adjust.

Valve clearance (cold)
Intake valve
0.10 ~ 0.15 mm
(0.0039 ~ 0.0059 in)
Exhaust valve
0.20 ~ 0.25 mm
(0.0079 ~ 0.0098 in)

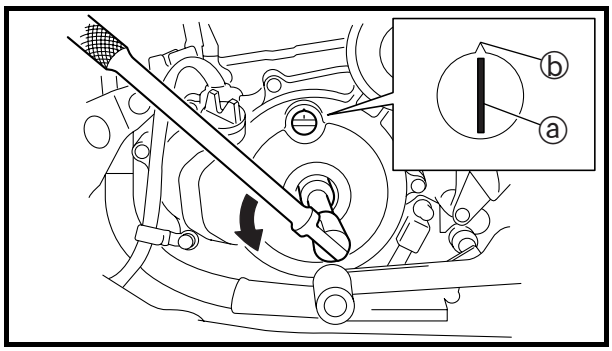

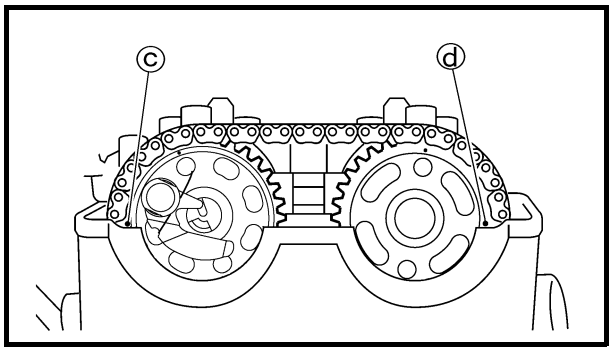

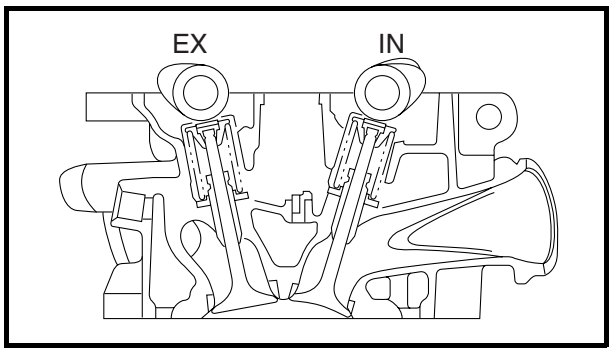

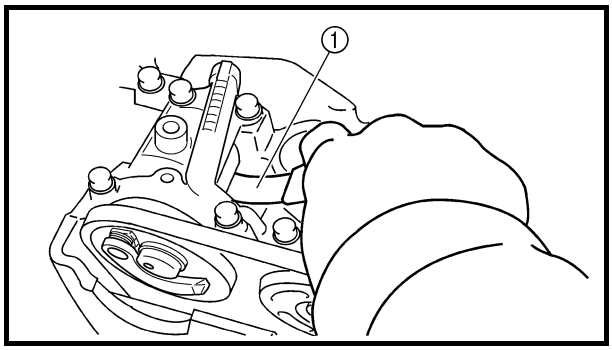

▼▼▼▼▼▼▼▼▼▼▼▼▼▼▼▼▼▼▼▼▼▼▼▼▼▼▼▼▼▼▼▼▼▼

a. Turn the crankshaft counterclockwise.
b. When the piston is at the Top Dead Center (TDC) on the compression stroke, align the "I" mark ⓐ on the A.C. magneto rotor with the stationary pointer ⓑ on the A.C. magneto cover.

NOTE:
- In order to be sure that the piston is at the Top Dead Center (TDC) the punch mark ⓒ on the exhaust camshaft sprocket and the punch mark ⓓ on the intake camshaft sprocket must align with the cylinder head mating surface, as shown in the illustration.
- The Top Dead Center (TDC) on the compression stroke can be found when the camshaft lobes are turned away from each other.

c. Measure the valve clearance with a thickness gauge ①.

NOTE:
If the valve clearance is incorrect, record the measured reading.

▲▲▲▲▲▲▲▲▲▲▲▲▲▲▲▲▲▲▲▲▲▲▲▲▲▲▲▲▲▲▲▲▲▲

5. Remove:
   - intake camshaft
   - exhaust camshaft

NOTE:
- Refer to "CAMSHAFTS" in chapter 4.
- When removing the timing chain and camshafts, fasten the timing chain with a wire to retrieve it if it falls into the crankcase.

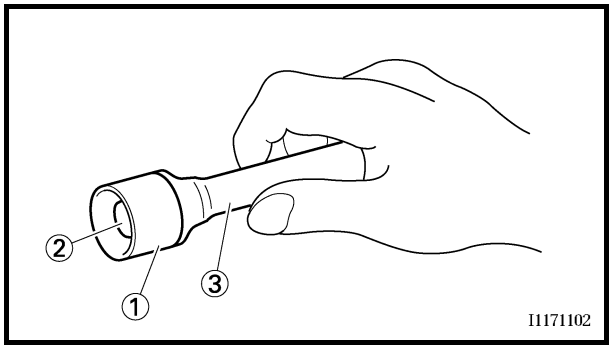

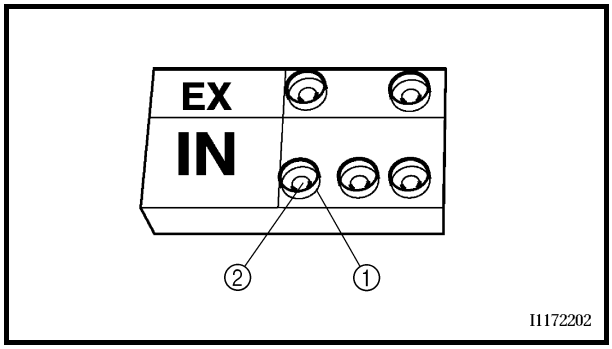

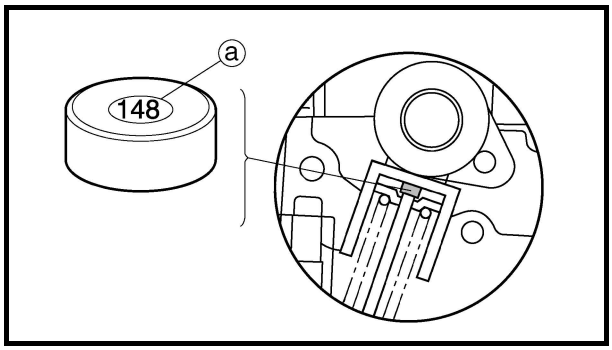

6. Adjust:
   - valve clearance

▼▼▼▼▼▼▼▼▼▼▼▼▼▼▼▼▼▼▼▼▼▼▼▼▼▼▼▼▼▼▼▼▼▼

a. Remove the valve lifter ① and the valve pad ② with a valve lapper ③.

	**Valve lapper** **90890-04101**

NOTE:
- Cover the timing chain opening with a rag to prevent the valve pad from falling into the crankcase.
- Make a note of the position of each valve lifter ① and valve pad ② so that they can be installed in the correct place.

b. Select the proper valve pad from the following table.

Valve pad thickness range		Available valve pads
Nos. 120 ~ 240	1.20 (0.047) ~ 2.40 mm (0.094 in)	25 thicknesses in 0.05 mm (0.002 in) increments

NOTE:
- The thickness ⓐ of each valve pad is marked in hundredths of millimeters on the side that touches the valve lifter.
- Since valve pads of various sizes are originally installed, the valve pad number must be rounded in order to reach the closest equivalent to the original.

c. Round off the original valve pad number according to the following table.

Last digit	Rounded value
0 or 2	0
5	5
8	10

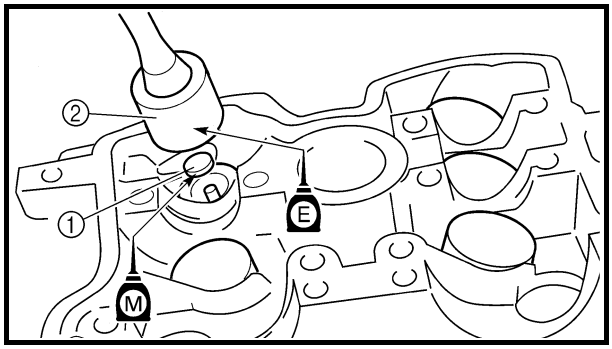

EXAMPLE:
Original valve pad number = 148 {thickness = 1.48 mm (0.058 in)}
Rounded value = 150

d. Locate the rounded number of the original valve pad and the measured valve clearance in the valve pad selection table. The point where the column and row intersect is the new valve pad number.

NOTE:
The new valve pad number is only an approximation. The valve clearance must be measured again and the above steps should be repeated if the measurement is still incorrect.

e. Install the new valve pad ① and the valve lifter ②.

NOTE:
- Lubricate the valve pad with molybdenum disulfide oil.
- Lubricate the valve lifter with engine oil.
- The valve lifter must turn smoothly when rotated by hand.
- Install the valve lifter and the valve pad in the correct place.

f. Install the exhaust and intake camshafts, timing chain and the camshaft caps.

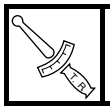	**Camshaft cap bolt** **10 Nm (1.0 m · kg, 7.2 ft · lb)**

NOTE:
- Refer to “INSTALLING THE CAMSHAFTS — CAMSHAFTS” in chapter 4.
- Lubricate the camshaft bearings, camshaft lobes and camshaft journals.
- First, install the exhaust camshaft.
- Align the camshaft sprocket marks with the edge of the cylinder head.
- Turn the crankshaft counterclockwise several full turns to seat the parts.

g. Measure the valve clearance again.
h. If the valve clearance is still out of specification, repeat all of the valve clearance adjustment steps until the specified clearance is obtained.

▲▲▲▲▲▲▲▲▲▲▲▲▲▲▲▲▲▲▲▲▲▲▲▲▲▲▲▲▲▲▲▲

INTAKE

MEASURED CLEARANCE	INSTALLED PAD NUMBER																								
	120	125	130	135	140	145	150	155	160	165	170	175	180	185	190	195	200	205	210	215	220	225	230	235	240
0.00 ~ 0.04			120	125	130	135	140	145	150	155	160	165	170	175	180	185	190	195	200	205	210	215	220	225	230
0.05 ~ 0.09		120	125	130	135	140	145	150	155	160	165	170	175	180	185	190	195	200	205	210	215	220	225	230	235
0.10 ~ 0.15	STANDARD CLEARANCE																								
0.16 ~ 0.20	125	130	135	140	145	150	155	160	165	170	175	180	185	190	195	200	205	210	215	220	225	230	235	240	
0.21 ~ 0.25	130	135	140	145	150	155	160	165	170	175	180	185	190	195	200	205	210	215	220	225	230	235	240		
0.26 ~ 0.30	135	140	145	150	155	160	165	170	175	180	185	190	195	200	205	210	215	220	225	230	235	240			
0.31 ~ 0.35	140	145	150	155	160	165	170	175	180	185	190	195	200	205	210	215	220	225	230	235	240				
0.36 ~ 0.40	145	150	155	160	165	170	175	180	185	190	195	200	205	210	215	220	225	230	235	240					
0.41 ~ 0.45	150	155	160	165	170	175	180	185	190	195	200	205	210	215	220	225	230	235	240						
0.46 ~ 0.50	155	160	165	170	175	180	185	190	195	200	205	210	215	220	225	230	235	240							
0.51 ~ 0.55	160	165	170	175	180	185	190	195	200	205	210	215	220	225	230	235	240								
0.56 ~ 0.60	165	170	175	180	185	190	195	200	205	210	215	220	225	230	235	240									
0.61 ~ 0.65	170	175	180	185	190	195	200	205	210	215	220	225	230	235	240										
0.66 ~ 0.70	175	180	185	190	195	200	205	210	215	220	225	230	235	240											
0.71 ~ 0.75	180	185	190	195	200	205	210	215	220	225	230	235	240												
0.76 ~ 0.80	185	190	195	200	205	210	215	220	225	230	235	240													
0.81 ~ 0.85	190	195	200	205	210	215	220	225	230	235	240														
0.86 ~ 0.90	195	200	205	210	215	220	225	230	235	240															
0.91 ~ 0.95	200	205	210	215	220	225	230	235	240																
0.96 ~ 1.00	205	210	215	220	225	230	235	240																	
1.01 ~ 1.05	210	215	220	225	230	235	240																		
1.06 ~ 1.10	215	220	225	230	235	240																			
1.11 ~ 1.15	220	225	230	235	240																				
1.16 ~ 1.20	225	230	235	240																					
1.21 ~ 1.25	230	235	240																						
1.26 ~ 1.30	235	240																							
1.31 ~ 1.35	240																								

VALVE CLEARANCE (cold):
0.10 ~ 0.15 mm (0.0039 ~ 0.0059 in)
Example: Installed is 175 pad
Measured clearance is 0.22 mm (0.0087 in)
Replace pad 175 with pad 185.
Pad number: (example)
Pad No. 175 = 1.75 mm (0.069 in)
Pad No. 185 = 1.85 mm (0.073 in)

EXHAUST

MEASURED CLEARANCE	INSTALLED PAD NUMBER																								
	120	125	130	135	140	145	150	155	160	165	170	175	180	185	190	195	200	205	210	215	220	225	230	235	240
0.00 ~ 0.04					120	125	130	135	140	145	150	155	160	165	170	175	180	185	190	195	200	205	210	215	220
0.05 ~ 0.09				120	125	130	135	140	145	150	155	160	165	170	175	180	185	190	195	200	205	210	215	220	225
0.10 ~ 0.14			120	125	130	135	140	145	150	155	160	165	170	175	180	185	190	195	200	205	210	215	220	225	230
0.15 ~ 0.19		120	125	130	135	140	145	150	155	160	165	170	175	180	185	190	195	200	205	210	215	220	225	230	235
0.20 ~ 0.25	STANDARD CLEARANCE																								
0.26 ~ 0.30	125	130	135	140	145	150	155	160	165	170	175	180	185	190	195	200	205	210	215	220	225	230	235	240	
0.31 ~ 0.35	130	135	140	145	150	155	160	165	170	175	180	185	190	195	200	205	210	215	220	225	230	235	240		
0.36 ~ 0.40	135	140	145	150	155	160	165	170	175	180	185	190	195	200	205	210	215	220	225	230	235	240			
0.41 ~ 0.45	140	145	150	155	160	165	170	175	180	185	190	195	200	205	210	215	220	225	230	235	240				
0.46 ~ 0.50	145	150	155	160	165	170	175	180	185	190	195	200	205	210	215	220	225	230	235	240					
0.51 ~ 0.55	150	155	160	165	170	175	180	185	190	195	200	205	210	215	220	225	230	235	240						
0.56 ~ 0.60	155	160	165	170	175	180	185	190	195	200	205	210	215	220	225	230	235	240							
0.61 ~ 0.65	160	165	170	175	180	185	190	195	200	205	210	215	220	225	230	235	240								
0.66 ~ 0.70	165	170	175	180	185	190	195	200	205	210	215	220	225	230	235	240									
0.71 ~ 0.75	170	175	180	185	190	195	200	205	210	215	220	225	230	235	240										
0.76 ~ 0.80	175	180	185	190	195	200	205	210	215	220	225	230	235	240											
0.81 ~ 0.85	180	185	190	195	200	205	210	215	220	225	230	235	240												
0.86 ~ 0.90	185	190	195	200	205	210	215	220	225	230	235	240													
0.91 ~ 0.95	190	195	200	205	210	215	220	225	230	235	240														
0.96 ~ 1.00	195	200	205	210	215	220	225	230	235	240															
1.01 ~ 1.05	200	205	210	215	220	225	230	235	240																
1.06 ~ 1.10	205	210	215	220	225	230	235	240																	
1.11 ~ 1.15	210	215	220	225	230	235	240																		
1.16 ~ 1.20	215	220	225	230	235	240																			
1.21 ~ 1.25	220	225	230	235	240																				
1.26 ~ 1.30	225	230	235	240																					
1.31 ~ 1.35	230	235	240																						
1.36 ~ 1.40	235	240																							
1.41 ~ 1.45	240																								

VALVE CLEARANCE (cold):
0.20 ~ 0.25 mm (0.0079 ~ 0.0098 in)
Example: Installed is 175 pad
Measured clearance is 0.32 mm (0.0126 in)
Replace pad 175 with pad 185.
Pad number: (example)
Pad No. 175 = 1.75 mm (0.069 in)
Pad No. 185 = 1.85 mm (0.073 in)

7. Install:
   - all removed parts

NOTE:
For installation, reverse the removal procedure.

EBS00051

ADJUSTING THE ENGINE IDLING SPEED

1. Start the engine and let it warm up for several minutes.
2. Remove:
   - seat
   - fuel tank cover
   - side covers (left and right)
   - fuel tank

NOTE:
Slide the fuel tank.

   Refer to “SEAT, FENDERS AND FUEL TANK”.
3. Attach:
   - digital tachometer
     (onto the ignition coil)
4. Install:
   - fuel tank
     Refer to “SEAT, FENDERS AND FUEL TANK”.
5. Measure:
   - engine idling speed
     Out of specification → Adjust.

	Engine idling speed **1,750 ~ 1,850 r/min**

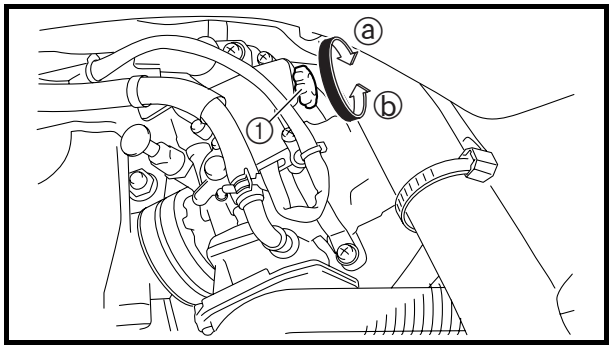

6. Adjust:
   - engine idling speed

▼▼▼▼▼▼▼▼▼▼▼▼▼▼▼▼▼▼▼▼▼▼▼▼▼▼▼▼▼▼▼▼▼▼

a. Turn the throttle stop screw ① in direction ⓐ or ⓑ until the specified idling speed is obtained.

Direction ⓐ	**Idling speed becomes higher.**
Direction ⓑ	**Idling speed becomes lower.**

▲▲▲▲▲▲▲▲▲▲▲▲▲▲▲▲▲▲▲▲▲▲▲▲▲▲▲▲▲▲▲▲▲▲

7. Remove:
   - fuel tank

NOTE:
Slide the fuel tank.

8. Detach:
   - engine tachometer
9. Install:
   - fuel tank
   - side covers (left and right)
   - fuel tank cover
   - seat

   Refer to “SEAT, FENDERS AND FUEL TANK”.
10. Adjust:
   - throttle lever free play

   Refer to “ADJUSTING THE THROTTLE LEVER FREE PLAY”.

	Throttle lever free play **2 ~ 4 mm (0.08 ~ 0.16 in)**

EBS00052

ADJUSTING THE THROTTLE LEVER FREE PLAY

NOTE:
Engine idling speed should be adjusted properly before adjusting the throttle lever free play.

ADJUSTING THE THROTTLE LEVER FREE PLAY

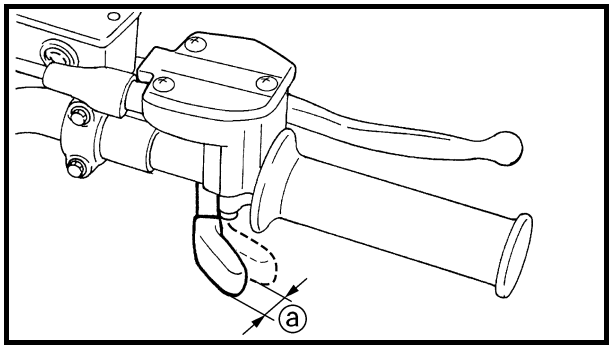

1. Measure:
   - throttle lever free play ⓐ
     Out of specification → Adjust.

	Throttle lever free play **2 ~ 4 mm (0.08 ~ 0.16 in)**

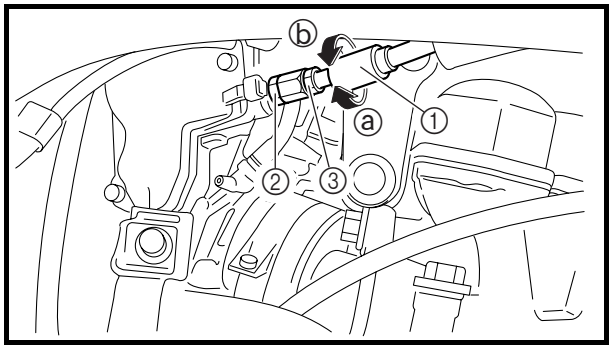

2. Adjust:
   - throttle lever free play

▼▼▼▼▼▼▼▼▼▼▼▼▼▼▼▼▼▼▼▼▼▼▼▼▼▼▼▼▼▼▼▼▼▼

First step:

a. Slide back the rubber cover ①.
b. Loosen the locknut ② on the carburetor side.
c. Turn the adjusting nut ③ in direction ⓐ or ⓑ until the correct free play is obtained.

Direction ⓐ	**Free play is increased.**
Direction ⓑ	**Free play is decreased.**

d. Tighten the locknut.
e. Slide the rubber cover to its original position.

NOTE:

If the free play cannot be adjusted here, adjust it at the throttle lever side of the cable.

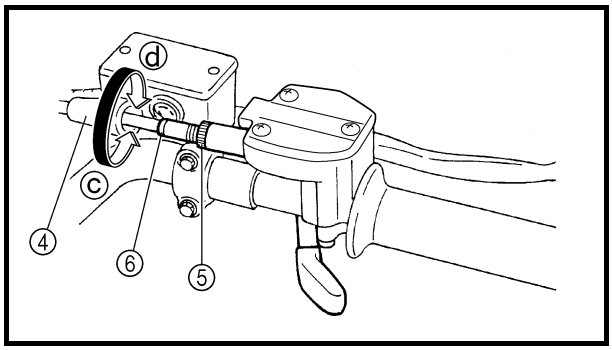

Second step:

f. Slide back the rubber cover ④.
g. Loosen the locknut ⑤.
h. Turn the adjusting bolt ⑥ in direction ⓒ or ⓓ until the correct free play is obtained.

Direction ⓒ	**Free play is increased.**
Direction ⓓ	**Free play is decreased.**

i. Tighten the locknut.
j. Slide the rubber cover to its original position.

⚠ WARNING

After adjusting the free play, turn the handlebar to the right and left to make sure that the engine idling speed does not increase.

▲▲▲▲▲▲▲▲▲▲▲▲▲▲▲▲▲▲▲▲▲▲▲▲▲▲▲▲▲▲▲▲▲▲

EBS00053

ADJUSTING THE SPEED LIMITER

The speed limiter keeps the carburetor throttle from becoming fully-opened even when the throttle lever is applied to the maximum position. Screwing in the adjusting screw stops the engine speed from increasing.

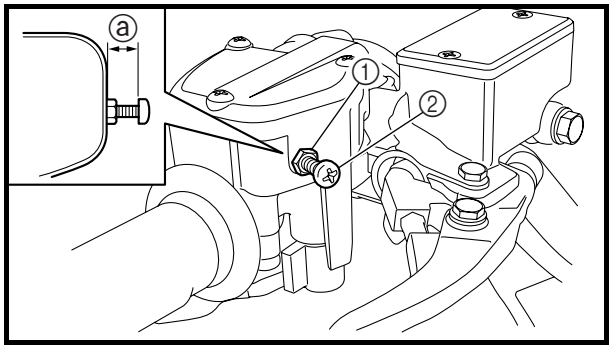

1. Measure:
   - speed limiter length ⓐ
     Out of specification → Adjust.

	Speed limiter length **Less than 12 mm (0.47 in)**

2. Adjust:
   - speed limiter length

▼▼▼▼▼▼▼▼▼▼▼▼▼▼▼▼▼▼▼▼▼▼▼▼▼▼▼▼▼▼▼▼▼▼

a. Loosen the locknut ①.
b. Turn the adjusting screw ② in or out until the specified speed limiter length is obtained.

Turning in	**Speed limiter length is decreased.**
Turning out	**Speed limiter length is increased.**

c. Tighten the locknut.

⚠ WARNING

- **Particularly for a beginner rider, the speed limiter should be screwed in completely. Screw it out little by little as their riding technique improves. Never remove the speed limiter for a beginning rider.**
- **For proper throttle lever operation do not turn out the adjusting screw more than 12 mm (0.47 in). Also, always adjust the throttle lever free play to 2 ~ 4 mm (0.08 ~ 0.16 in).**

▲▲▲▲▲▲▲▲▲▲▲▲▲▲▲▲▲▲▲▲▲▲▲▲▲▲▲▲▲▲▲▲▲▲

EBS00057

CHECKING THE SPARK PLUG

1. Remove:
   - seat
   - fuel tank cover
   - side covers (left and right)
   - fuel tank

NOTE:
Slide the fuel tank.

2. Remove:
   - ignition coil
3. Remove:
   - spark plug
4. Check:
   - spark plug type
     Incorrect → Change.

Standard spark plug
CR8E/NGK

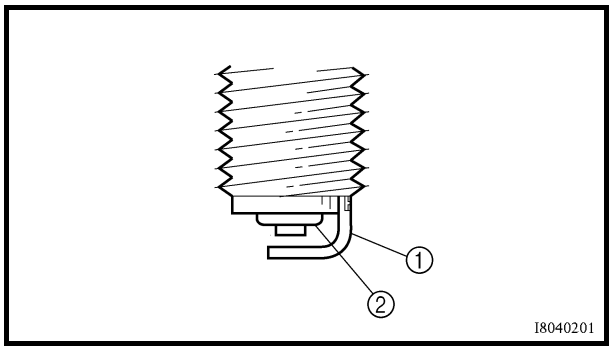

5. Check:
   - electrode ①
     Wear/damage → Replace.
   - insulator ②
     Abnormal color → Replace.
     Normal color is a medium-to-light tan color.
6. Clean:
   - spark plug
     (with a spark plug cleaner or wire brush)

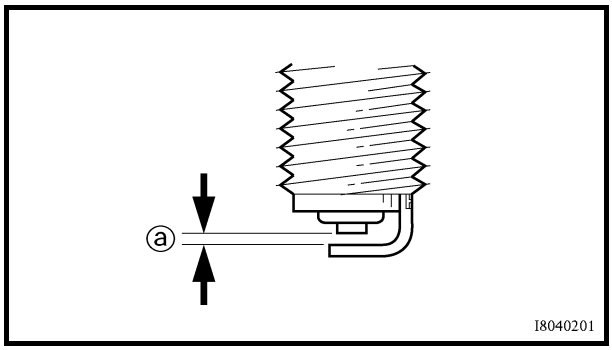

7. Measure:
   - spark plug gap ⓐ
     Use a wire gauge or thickness gauge.
     Out of specification → Regap.

Spark plug gap
0.7 ~ 0.8 mm (0.028 ~ 0.031 in)

8. Tighten:
   - spark plug — 13 Nm (1.3 m · kg, 9.4 ft · lb)

NOTE:
Before installing a spark plug, clean the gasket surface and plug surface.

9. Install:
   - ignition coil
   - fuel tank
   - side covers (left and right)
   - fuel tank cover
   - seat
     Refer to “SEAT, FENDERS AND FUEL TANK”.

EBS00058

CHECKING THE IGNITION TIMING

NOTE:
Engine idling speed and throttle cable free play should be adjusted properly before checking the ignition timing.

1. Remove:
   - seat
   - fuel tank cover
   - side covers (left and right)
   - fuel tank

NOTE:
Slide the fuel tank.

   Refer to “SEAT, FENDERS AND FUEL TANK”.
2. Attach:
   - digital tachometer
   - timing light
     (onto the ignition coil)

Timing light
P/N. YM-33277-A, 90890-03141

3. Install:
   - fuel tank
     Refer to “SEAT, FENDERS AND FUEL TANK”.

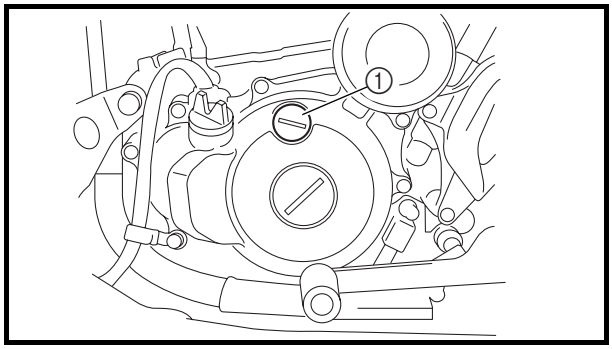

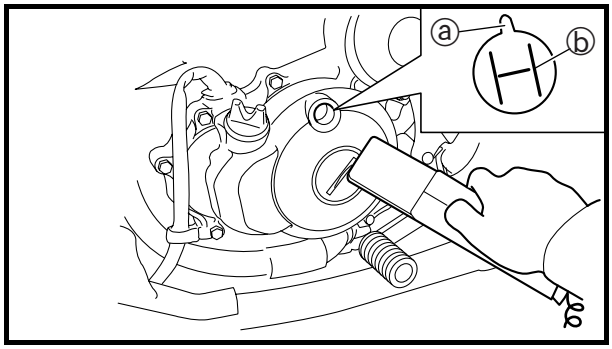

4. Check:
   - ignition timing

▼▼▼▼▼▼▼▼▼▼▼▼▼▼▼▼▼▼▼▼▼▼▼▼▼▼▼▼▼▼▼▼▼▼

a. Warm up the engine and keep it at the specified speed.

	Engine speed **1,750 ~ 1,850 r/min**

b. Remove the timing mark accessing screw ①.
c. Visually check the stationary pointer ⓐ to verify it is within the required firing range ⓑ indicated on the A.C. magneto rotor.
   Incorrect firing range → Check the pulser coil assembly.
d. Install the timing mark accessing screw.

▲▲▲▲▲▲▲▲▲▲▲▲▲▲▲▲▲▲▲▲▲▲▲▲▲▲▲▲▲▲▲▲▲▲

5. Remove:
   - fuel tank

NOTE:
Slide the fuel tank.

6. Detach:
   - timing light
   - engine tachometer
7. Install:
   - fuel tank
   - side covers (left and right)
   - fuel tank cover
   - seat
     Refer to “SEAT, FENDERS AND FUEL TANK”.

EBS01101

CHECKING THE ENGINE OIL LEVEL

1. Place the machine on a level surface.
2. Start the engine, warm it up until the engine oil has reached a normal temperature of 40 °C (104 °F), let it continue to idle for ten seconds, and then turn the engine off.

NOTE:
To achieve the proper engine oil temperature for an accurate oil level reading, the engine must have first completely cooled down, and then warmed up again for several minutes to normal operating temperature.

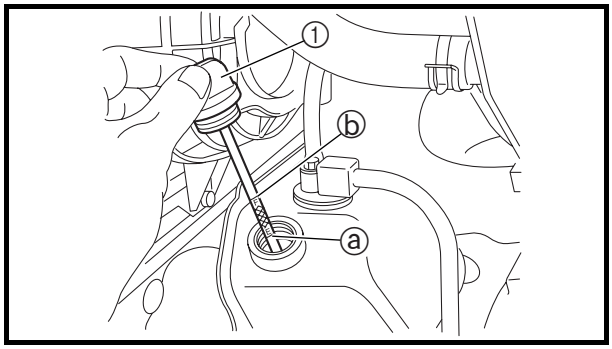

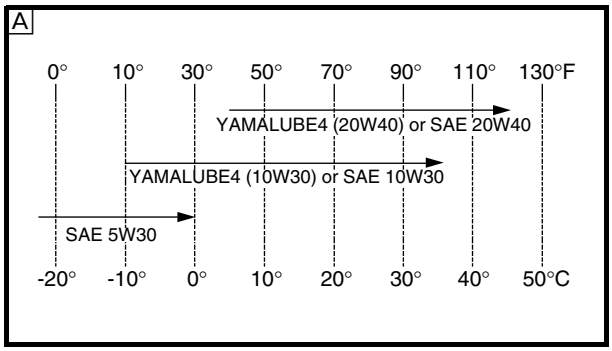

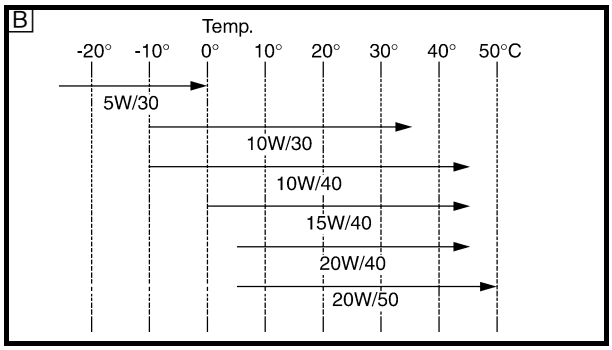

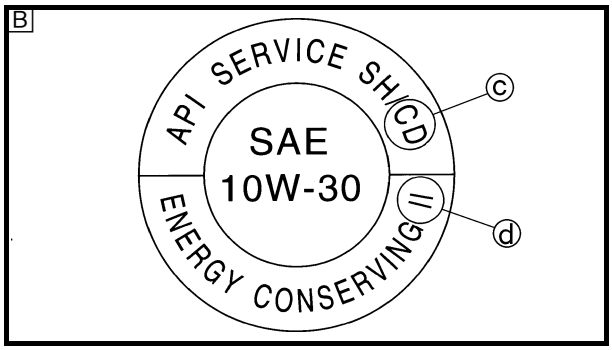

3. Check:
   - engine oil level
     Oil level should be between the minimum level mark ⓐ and the maximum level mark ⓑ.
     Low oil level → Add oil to the proper level.

NOTE:
- Wait a few minutes until the oil settles before checking the oil level.
- Do not screw the dipstick ① in when checking the oil level.

Recommended oil
Follow the chart on the left.

NOTE:
Recommended oil classification:
API Service “SE”, “SF”, “SG” type or equivalent (e.g. “SF—SE—CC”, “SF—SE—SD” etc.)

CAUTION:
- **Engine oil also lubricates the clutch and the wrong oil types or additives could cause clutch slippage. Therefore, do not add any chemical additives or use engine oils with a grade of CD ⓒ or higher and do not use oils labeled “ENERGY CONSERVING II” ⓓ or higher.**
- **Do not add any chemical additives. Engine oil also lubricates the clutch and additives could cause clutch slippage.**
- **Do not allow foreign material to enter the crankcase.**

A For CDN
B For Europe, Oceania

4. Start the engine, warm it up for several minutes, and then turn it off.
5. Check:
   - engine oil level

NOTE:
Before checking the engine oil level, wait a few minutes until the oil has settled.

EBS00067

CHANGING THE ENGINE OIL

1. Remove:
   - engine skid plate
     Refer to “SEAT, FENDERS AND FUEL TANK”.
2. Start the engine, warm it up for several minutes, and then turn it off.
3. Place a container under the engine oil drain bolt.

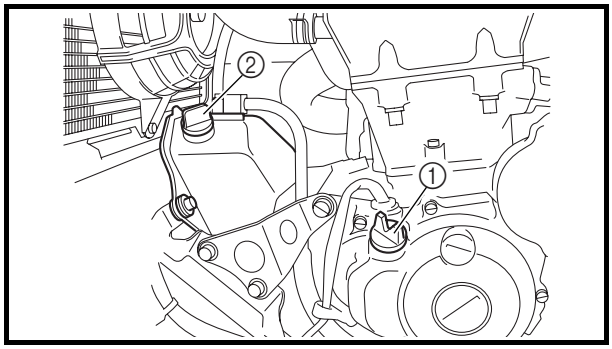

4. Remove:
   - engine oil filler cap ①
   - dipstick ②

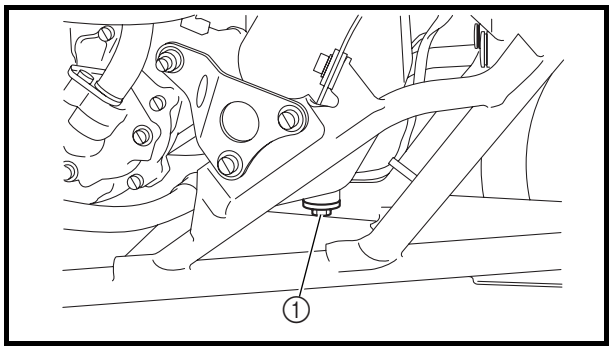

5. Remove:
   - engine oil drain bolt (oil tank) ①
     (along with the washer)

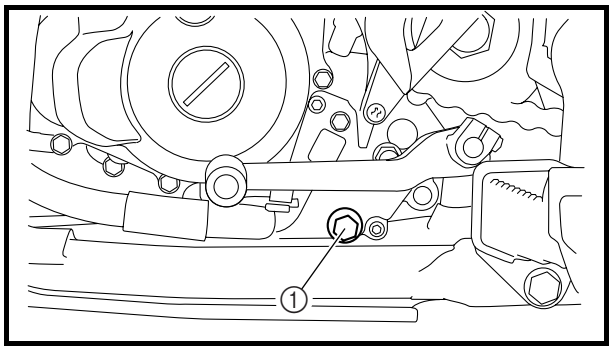

6. Remove:
   - engine oil drain bolt (crankcase) ①
     (along with the gasket)

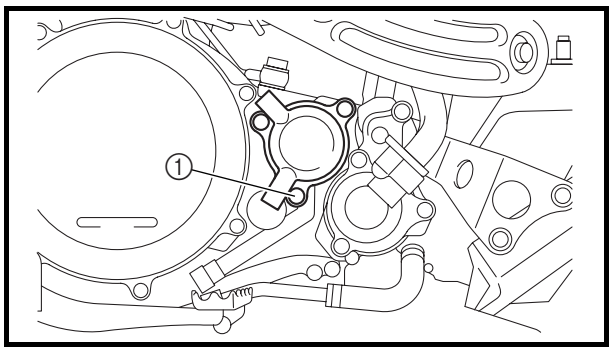

7. Remove:
   - oil filter element drain bolt ①
8. Drain:
   - engine oil
     (completely from the oil tank and the crankcase)

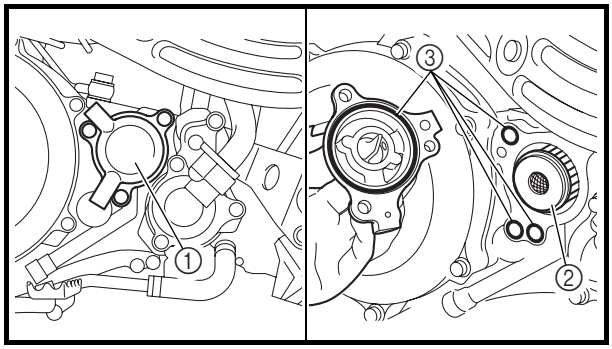

9. If the oil filter element is also to be replaced, perform the following procedure.

▼▼▼▼▼▼▼▼▼▼▼▼▼▼▼▼▼▼▼▼▼▼▼▼▼▼▼▼▼▼▼▼▼▼

a. Remove the oil filter element cover ① and oil filter element ②.
b. Check the O-rings ③ and replace them if they are cracked or damaged.
c. Install the new oil filter element and the oil filter element cover.

	Oil filter element cover bolt **10 Nm (1.0 m · kg, 7.2 ft · lb)**

▲▲▲▲▲▲▲▲▲▲▲▲▲▲▲▲▲▲▲▲▲▲▲▲▲▲▲▲▲▲▲▲▲▲

10. Check:
- engine oil drain bolt gasket
  Damage → Replace.

11. Install:
- engine oil drain bolt (crankcase)
  (along with the gasket)

  20 Nm (2.0 m · kg, 14 ft · lb)
- engine oil drain bolt (oil tank)
  (along with the washer)

  19 Nm (1.9 m · kg, 13 ft · lb)
- oil filter element drain bolt

  10 Nm (1.0 m · kg, 7.2 ft · lb)

12. Fill:
- oil tank
  (with the specified amount of the recommended engine oil)
- crankcase
  (with the specified amount of the recommended engine oil)

Overhaul
Total amount
1.95 L (1.72 Imp qt, 2.06 US qt)
Quantity in oil tank
1.55 L (1.36 Imp qt, 1.64 US qt)
Quantity in crankcase
0.40 L (0.35 Imp qt, 0.42 US qt)
Periodic oil replacement
Total amount
1.75 L (1.54 Imp qt, 1.85 US qt)
Quantity in oil tank
1.55 L (1.36 Imp qt, 1.64 US qt)
Quantity in crankcase
0.20 L (0.18 Imp qt, 0.21 US qt)
With oil filter element replacement
Total amount
1.85 L (1.63 Imp qt, 1.96 US qt)
Quantity in oil tank
1.55 L (1.36 Imp qt, 1.64 US qt)
Quantity in crankcase
0.30 L (0.26 Imp qt, 0.32 US qt)

13. Install:
- dipstick
- engine oil filler cap

14. Start the engine, warm it up for several minutes, and then turn it off.
15. Check:
- engine
  (for engine oil leaks)

16. Check:
- engine oil level
  Refer to “CHECKING THE ENGINE OIL LEVEL”.

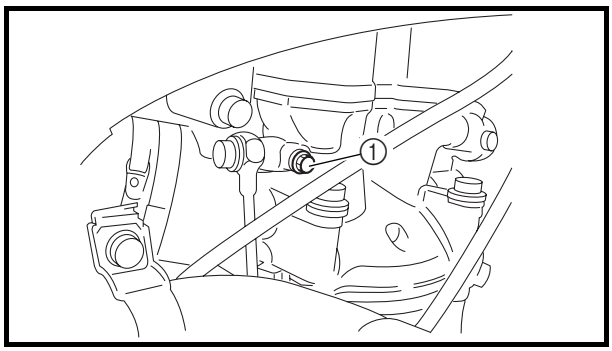

17.Check:
- engine oil pressure

▼▼▼▼▼▼▼▼▼▼▼▼▼▼▼▼▼▼▼▼▼▼▼▼▼▼▼▼▼▼▼▼▼▼

a. Slightly loosen the oil gallery bolt ①.
b. Start the engine and keep it idling until engine oil starts to seep from the oil gallery bolt. If no engine oil comes out after one minute, turn the engine off so that it will not seize.
c. Check the engine oil passages, the oil filter element and the oil pump for damage or leakage. Refer to “OIL PUMP” in chapter 4.
d. Start the engine after solving the problem(s) and check the engine oil pressure again.
e. Tighten the oil gallery bolt to specification.

	Oil gallery bolt **10 Nm (1.0 m · kg, 7.2 ft · lb)**

▲▲▲▲▲▲▲▲▲▲▲▲▲▲▲▲▲▲▲▲▲▲▲▲▲▲▲▲▲▲▲▲▲▲

18.Install:
- engine skid plate
  Refer to “SEAT, FENDERS AND FUEL TANK”.

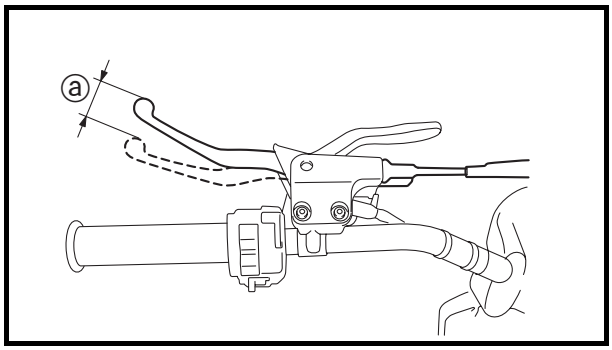

EBS00070

ADJUSTING THE CLUTCH CABLE

1. Check:
- clutch lever free play ⓐ
  Out of specification → Adjust.

	Clutch lever free play **(at the clutch lever end)** **8 ~ 13 mm (0.31 ~ 0.51 in)**

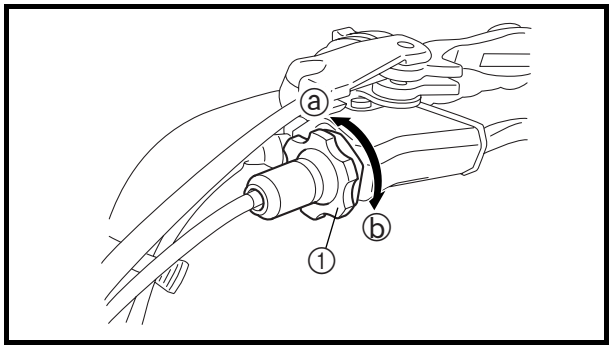

2. Adjust:
   - clutch release lever free play

▼▼▼▼▼▼▼▼▼▼▼▼▼▼▼▼▼▼▼▼▼▼▼▼▼▼▼▼▼▼▼▼▼▼

Handlebar side

a. Turn the adjusting nut ① in direction ⓐ or ⓑ until the specified clutch cable free play is obtained.

Direction ⓐ	**Clutch cable free play is increased.**
Direction ⓑ	**Clutch cable free play is decreased.**

NOTE:

If the specified clutch cable free play cannot be obtained on the handlebar side of the cable, use the adjusting nut on the engine side.

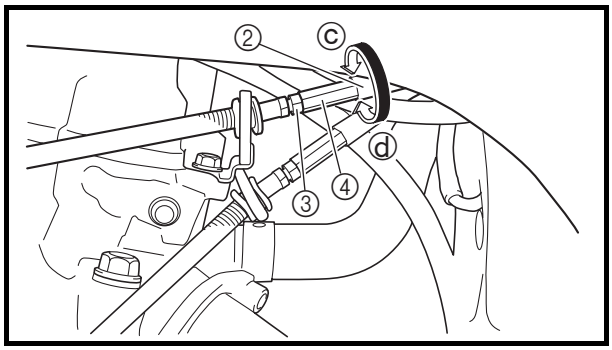

Engine side

a. Slide back the rubber cover ②.
b. Loosen the locknut ③.
c. Turn the adjusting nut ④ in direction ⓒ or ⓓ until the specified clutch cable free play is obtained.

Direction ⓒ	**Clutch cable free play is increased.**
Direction ⓓ	**Clutch cable free play is decreased.**

d. Tighten the locknut.
e. Slide the rubber cover to its original position.

▲▲▲▲▲▲▲▲▲▲▲▲▲▲▲▲▲▲▲▲▲▲▲▲▲▲▲▲▲▲▲▲▲▲

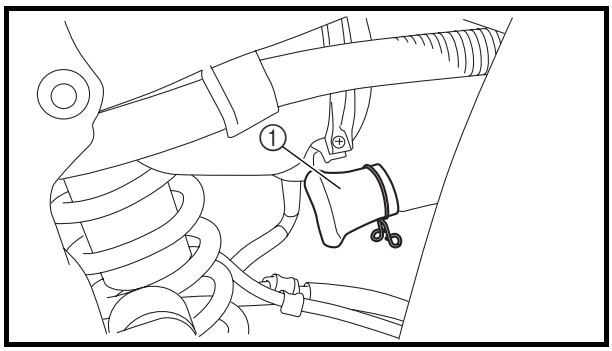

EBS00073

CLEANING THE AIR FILTER ELEMENT

NOTE:

There is a check hose ① at the bottom of the air filter case. If dust and/or water collects in this hose, clean the air filter element and air filter case.

1. Remove:
   - seat
     Refer to “SEAT, FENDERS AND FUEL TANK”.

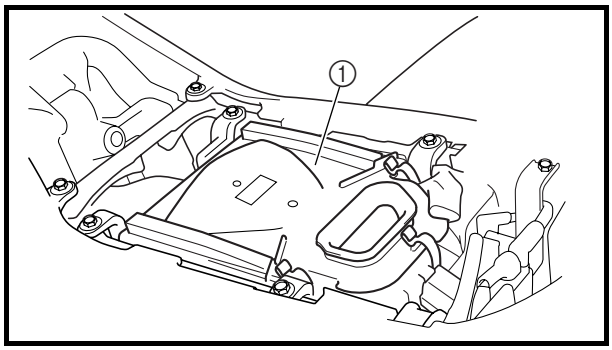

2. Remove:
   - air filter case cover ①

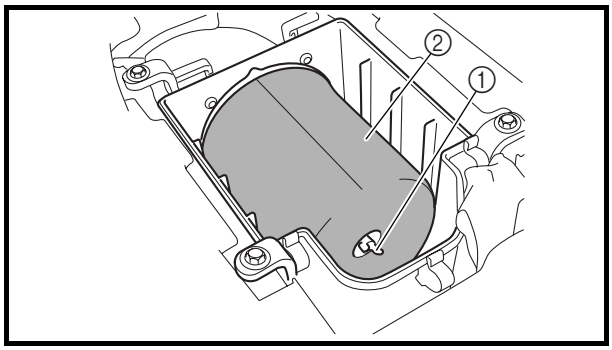

3. Remove:
   - wing bolt ①
   - air filter element ②
   - air filter element frame ③

CAUTION:

The engine should never be run without the air filter; excessive piston and/or cylinder wear may result.

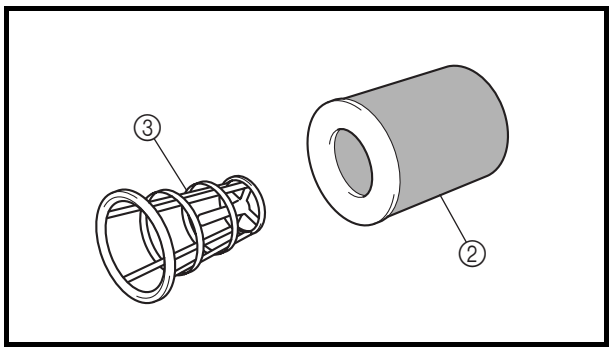

4. Check:
   - air filter element
     Damage → Replace.

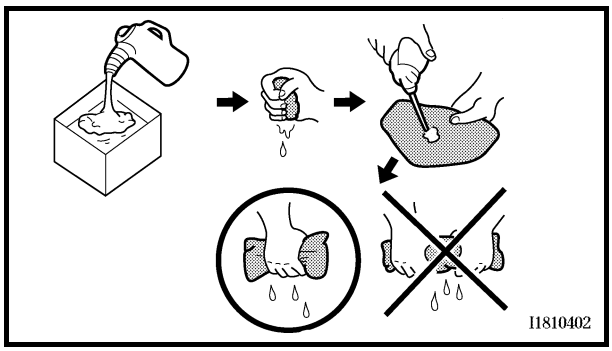

5. Clean:
   - air filter element

▼▼▼▼▼▼▼▼▼▼▼▼▼▼▼▼▼▼▼▼▼▼▼▼▼▼▼▼▼▼▼▼▼▼

a. Wash the element gently, but thoroughly in solvent.

⚠ WARNING

Use a cleaning solvent which is designed to clean parts only. Never use gasoline or low flash point solvents as they may cause a fire or explosion.

b. Squeeze the excess solvent out of the element and let it dry.

CAUTION:

Do not twist or wring out the element. This could damage the foam material.

c. Apply engine oil to the element.
d. Squeeze out the excess oil.

NOTE:
The element should be wet but not dripping.

▲▲▲▲▲▲▲▲▲▲▲▲▲▲▲▲▲▲▲▲▲▲▲▲▲▲▲▲▲▲▲▲▲▲

6. Install:
   - air filter element frame

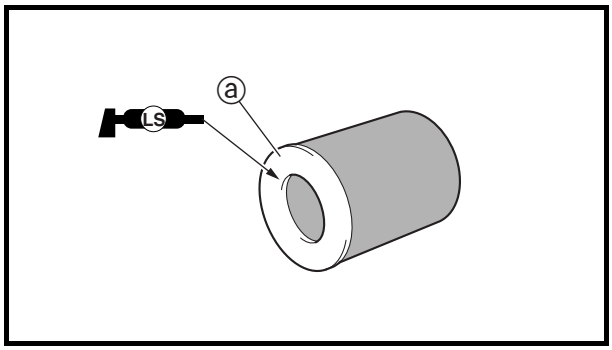

7. Apply:
   - Lithium-soap-based grease
     On the matching surface ⓐ on air filter element.
8. Install:
   - air filter element
   - wing bolt

NOTE:
Make sure its sealing surface matches the sealing surface of the case so there is no air leak.

9. Install:
   - air filter case cover
10. Install:
   - seat
     Refer to “SEAT, FENDERS AND FUEL TANK”.

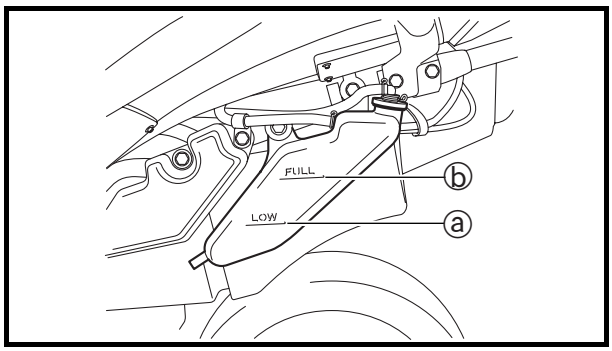

EBS00076

CHECKING THE COOLANT LEVEL

1. Place the machine on a level surface.
2. Check:
   - coolant level
     The coolant level should be between the minimum level mark ⓐ and maximum level mark ⓑ.
     Below the minimum level mark → Add the recommended coolant to the proper level.

CAUTION:

- **Adding water instead of coolant lowers the antifreeze content of the coolant. If water is used instead of coolant, check and if necessary, correct the antifreeze concentration of the coolant.**
- **Use only distilled water. However, soft water may be used if distilled water is not available.**

4. Start the engine, warm it up for several minutes, and then turn it off.
5. Check:
   - coolant level

NOTE:

Before checking the coolant level, wait a few minutes until the coolant has settled.

EBS00075

CHANGING THE COOLANT

1. Remove:
   - seat
   - fuel tank cover
   - right side cover
     Refer to “SEAT, FENDERS AND FUEL TANK”.

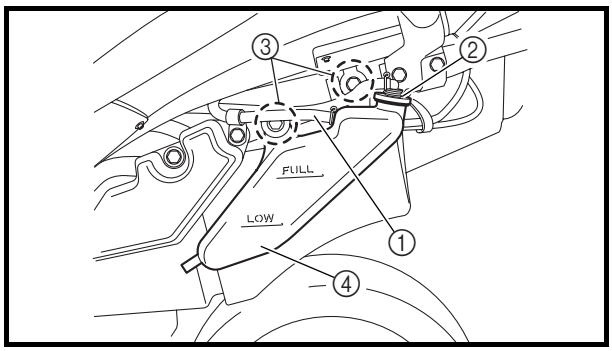

2. Disconnect:
   - coolant reservoir breather hose ①
3. Remove:
   - coolant reservoir cap ②
   - coolant reservoir bolts ③
   - coolant reservoir ④
4. Drain:
   - coolant
     (from the coolant reservoir)

5. Install:
   - coolant reservoir
   - coolant reservoir bolts

   7 Nm (0.7 m · kg, 5.1 ft · lb)
6. Connect:
   - coolant reservoir breather hose

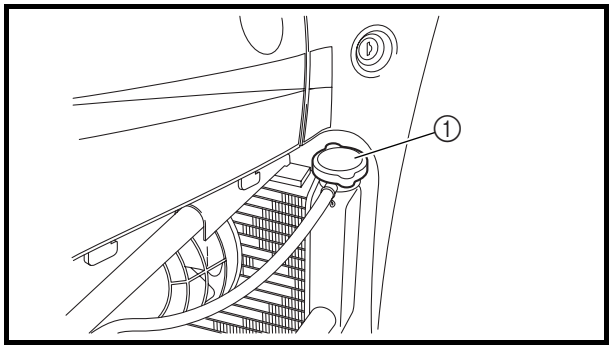

7. Remove:
   - radiator cap ①

WARNING

A hot radiator is under pressure. Therefore, do not remove the radiator cap when the engine is hot. Scalding hot fluid and steam may be blown out, which could cause serious injury. When the engine has cooled, open the radiator cap as follows:
Place a thick rag or a towel over the radiator cap and slowly turn the radiator cap counterclockwise toward the detent to allow any residual pressure to escape. When the hissing sound has stopped, press down on the radiator cap and turn it counterclockwise to remove.

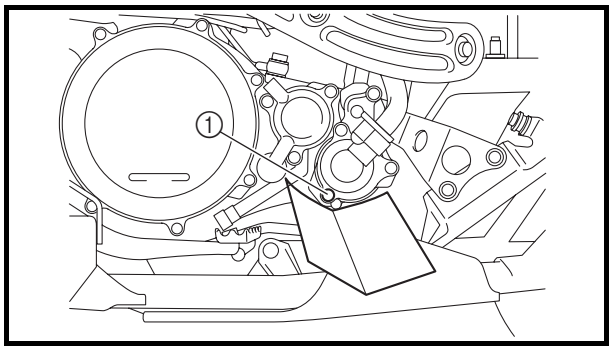

8. Remove:
   - coolant drain bolt ①
     (along with the copper washer)
9. Drain:
   - coolant
     (from the engine and radiator)

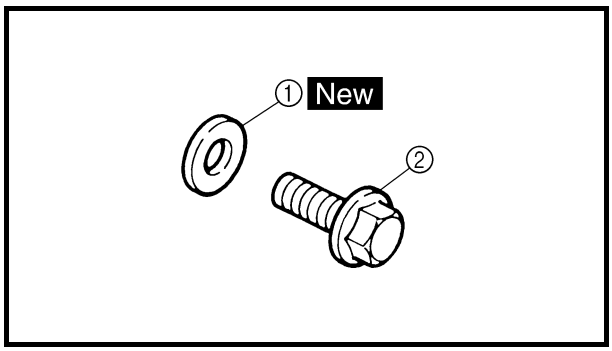

10. Check:
    - copper washer ① New
      coolant drain bolt ②
      Damage → Replace.
11. Install:
    - coolant drain bolt

    10 Nm (1.0 m · kg, 7.2 ft · lb)

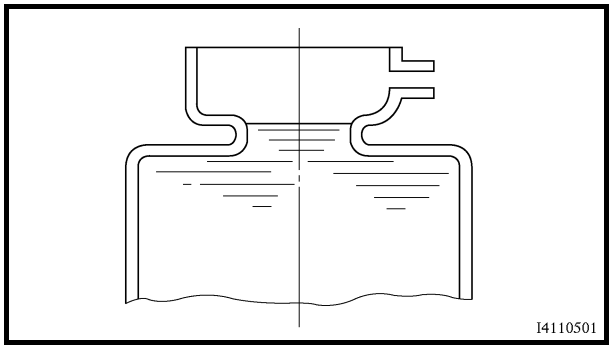

12.Fill:
- cooling system
  (with the specified amount of the recommended coolant)

Recommended antifreeze
High-quality ethylene glycol antifreeze containing corrosion inhibitors for aluminum engines
Mixing ratio
1:1 (antifreeze:water)
Quantity
Total amount
1.3 L (1.14 Imp qt, 1.37 US qt)
Coolant reservoir capacity
0.29 L (0.26 Imp qt, 0.31 US qt)

Handling notes for coolant
Coolant is potentially harmful and should be handled with special care.

WARNING
- **If coolant splashes in your eyes, thoroughly wash them with water and consult a doctor.**
- **If coolant splashes on your clothes, quickly wash it away with water and then with soap and water.**
- **If coolant is swallowed, induce vomiting and get immediate medical attention.**

CAUTION:
- **Adding water instead of coolant lowers the antifreeze content of the coolant. If water is used instead of coolant check, and if necessary, correct the antifreeze concentration of the coolant.**
- **Use only distilled water. However, if distilled water is not available, soft water may be used.**
- **If coolant comes into contact with painted surfaces, immediately wash them with water.**
- **Do not mix different types of antifreeze.**

13.Install:
- radiator cap

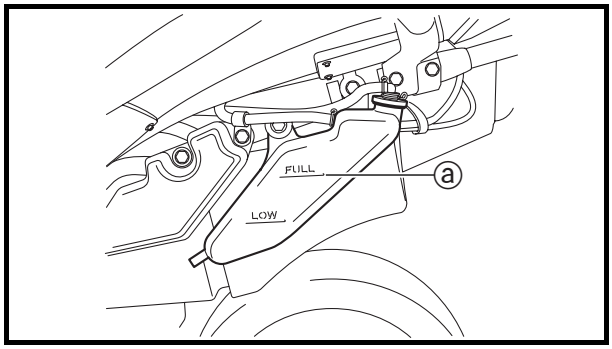

14. Fill:
- coolant reservoir
  (with the recommended coolant to the maximum level mark ⓐ)

15. Install:
- coolant reservoir cap

16. Start the engine, warm it up for several minutes, and then stop it.

17. Check:
- coolant level
  Refer to “CHECKING THE COOLANT LEVEL”.

NOTE:
Before checking the coolant level, wait a few minutes until the coolant has settled.

18. Install:
- right side cover
- fuel tank cover
- seat
  Refer to “SEAT, FENDERS AND FUEL TANK”.

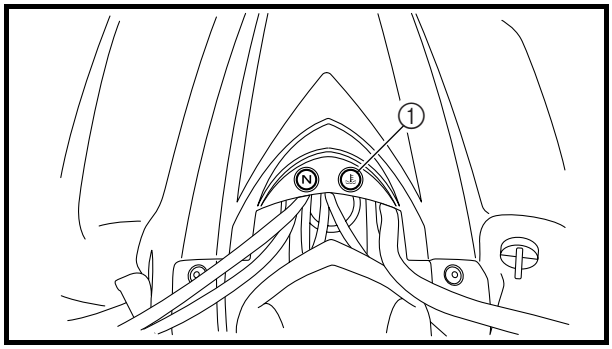

EBS00077

CHECKING THE COOLANT TEMPERATURE WARNING LIGHT

① Coolant temperature warning light

Coolant temperature warning light checking method

- Turn the main switch “ON” and the engine stop switch to “RUN”.
  - Coolant temperature warning light does not come on.
    - Push start switch with transmission in “neutral”.
      - Coolant temperature warning light comes on momentarily.
        - Coolant temperature and electrical circuit are OK. Go ahead with riding.
      - Coolant temperature warning light does not come on.
  - Coolant temperature warning light comes on.
    - Check the electrical circuit. Refer to “SIGNAL SYSTEM” in chapter 8.

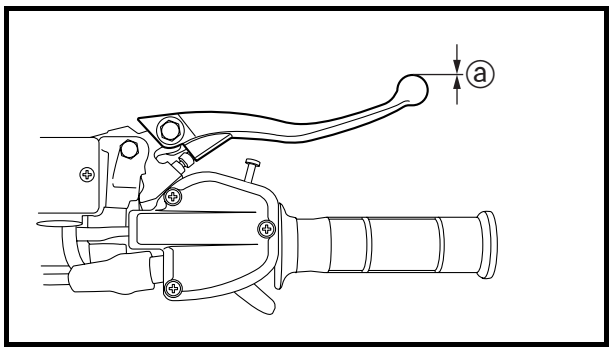

EBS00080

CHASSIS

ADJUSTING THE FRONT BRAKE

1. Measure:
   - brake lever free play ⓐ
     Out of specification → Bleed the front brake system.
     Refer to “BLEEDING THE HYDRAULIC BRAKE SYSTEM”.

Brake lever free play
(at the end of the brake lever)
0 mm (0 in)

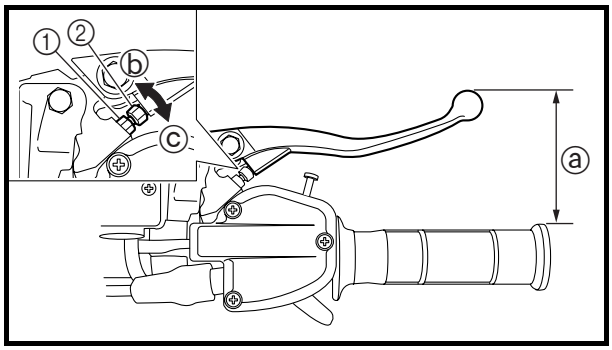

ADJUSTING THE BRAKE LEVER

1. Adjust:
   - brake lever position ⓐ

▼▼▼▼▼▼▼▼▼▼▼▼▼▼▼▼▼▼▼▼▼▼▼▼▼▼▼▼▼▼▼▼▼▼

a. While pushing the brake lever forward, loosen the locknut ①.
b. While pushing the brake lever forward, turn the adjusting bolt ② in direction ⓑ or ⓒ until the brake lever is in the desired position.
c. Tighten the locknut.

CAUTION:

Be sure to tighten the locknut, as failing to do so will cause poor brake performance.

▲▲▲▲▲▲▲▲▲▲▲▲▲▲▲▲▲▲▲▲▲▲▲▲▲▲▲▲▲▲▲▲▲▲

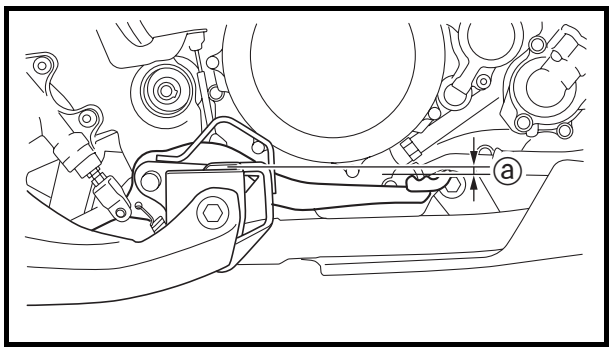

EBS00085

ADJUSTING THE REAR BRAKE

1. Measure:
   - rear brake pedal height ⓐ
     Out of specification → Adjust.

Rear brake pedal height
11.7 mm (0.46 in)

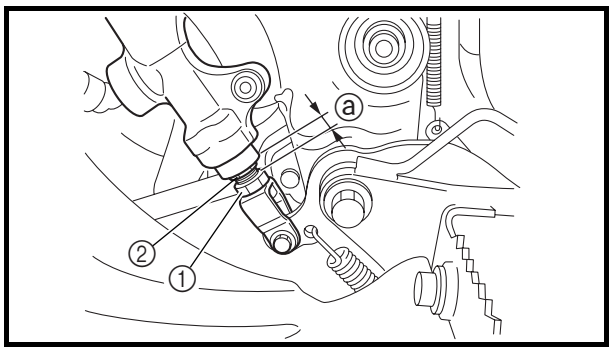

2. Adjust:
   - rear brake pedal height

▼▼▼▼▼▼▼▼▼▼▼▼▼▼▼▼▼▼▼▼▼▼▼▼▼▼▼▼▼▼▼▼▼▼

a. Loosen the locknut ①.
b. Turn the adjusting bolt ② until the brake pedal height is within the specified limits.
c. Tighten the locknut.

NOTE:

When adjusting the brake pedal height make sure the locknut-to-adjusting bolt clearance ⓐ does not exceed 2.2 ~ 3.2 mm (0.09 ~ 0.13 in).

⚠ WARNING

After this adjustment is performed, lift the front and rear wheels off the ground by placing a block under the engine, and spin the rear wheels to ensure there is no brake drag. If any brake drag is noticed, perform the above steps again.

▲▲▲▲▲▲▲▲▲▲▲▲▲▲▲▲▲▲▲▲▲▲▲▲▲▲▲▲▲▲▲▲▲▲

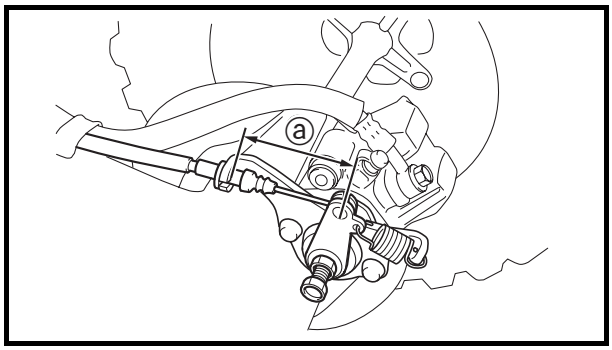

ADJUSTING THE PARKING BRAKE

1. Check:
   - parking brake cable end length ⓐ
     Out of specification → Adjust.

	Parking brake cable end length 56 ~ 60 mm (2.20 ~ 2.36 in)

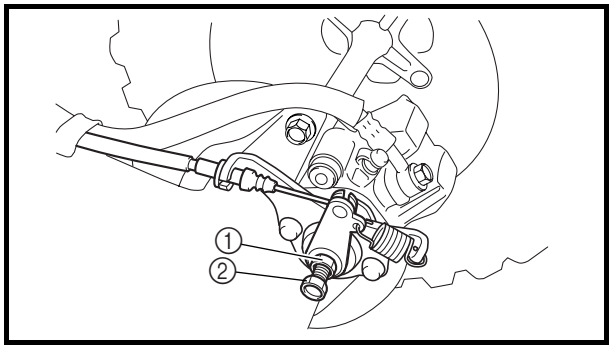

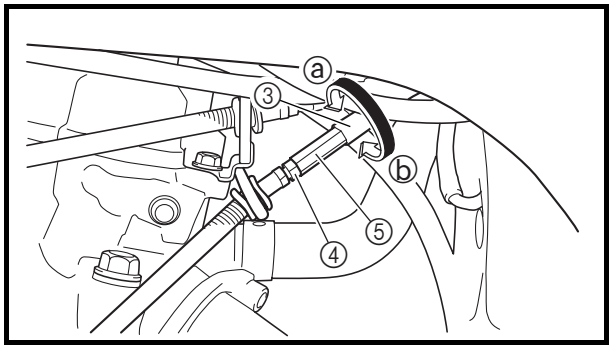

2. Adjust:
   - parking brake cable end length

▼▼▼▼▼▼▼▼▼▼▼▼▼▼▼▼▼▼▼▼▼▼▼▼▼▼▼▼▼▼▼▼▼▼

a. Loosen the locknut ① and adjusting bolt ②.
b. Slide back the rubber cover ③.
c. Loosen the locknut ④.
d. Turn the adjusting nut ⑤ in direction ⓐ or ⓑ until the specified brake cable end length is obtained.
e. Tighten the locknut.
f. Slowly turn the adjusting bolt clockwise until resistance is felt.
g. Turn it 1/8 counterclockwise.
h. Tighten the locknut ①.

	**Locknut** **16 Nm (1.6 m · kg, 11 ft · lb)**

i. Slide the rubber cover to its original position.

⚠ WARNING

After this adjustment is performed, lift the rear wheels off the ground by placing a block under the engine, and spin the rear wheels to ensure there is no brake drag. If any brake drag is noticed perform the above steps again.

▲▲▲▲▲▲▲▲▲▲▲▲▲▲▲▲▲▲▲▲▲▲▲▲▲▲▲▲▲▲▲▲▲▲

EBS00087

CHECKING THE BRAKE FLUID LEVEL

1. Place the machine on a level surface.

NOTE:

When checking the brake fluid level, make sure that the top of the brake fluid reservoir top is horizontal.

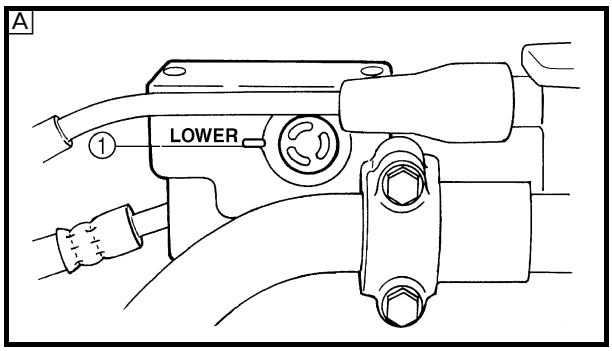

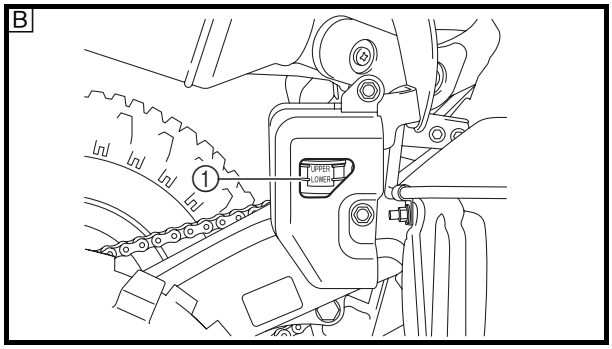

2. Check:
   - brake fluid level
     Below the minimum level mark ① → Add the recommended brake fluid to the proper level.

Recommended brake fluid
DOT 4

A Front brake
B Rear brake

WARNING

- **Use only the designated brake fluid. Other brake fluids may cause the rubber seals to deteriorate, causing leakage and poor brake performance.**
- **Refill with the same type of brake fluid that is already in the system. Mixing brake fluids may result in a harmful chemical reaction, leading to poor brake performance.**
- **When refilling, be careful that water does not enter the brake fluid reservoir. Water will significantly lower the boiling point of the brake fluid and could cause vapor lock.**

CAUTION:

Brake fluid may damage painted surfaces and plastic parts. Therefore, always clean up any spilt brake fluid immediately.

NOTE:

In order to ensure a correct reading of the brake fluid level, make sure that the top of the brake fluid reservoir is horizontal.

EBS00088

CHECKING THE FRONT BRAKE PADS

1. Remove:
   - front wheels
     Refer to “FRONT AND REAR WHEELS” in chapter 7.

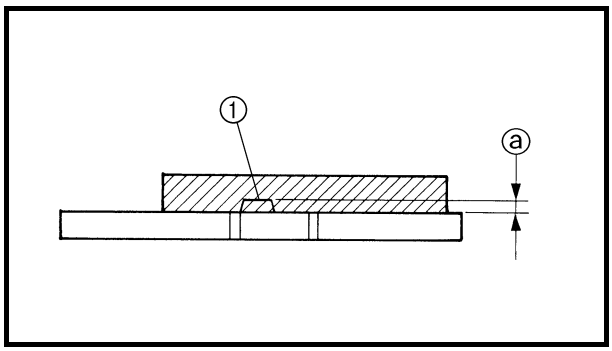

2. Check:
   - brake pads
     Wear indicators ① almost touch the brake disc → Replace the brake pads as a set.
     Refer to “FRONT AND REAR BRAKES” in chapter 7.

	Brake pad wear limit ⓐ **1.0 mm (0.04 in)**

3. Operate the brake lever.
4. Install:
   - front wheels
     Refer to “FRONT AND REAR WHEELS” in chapter 7.

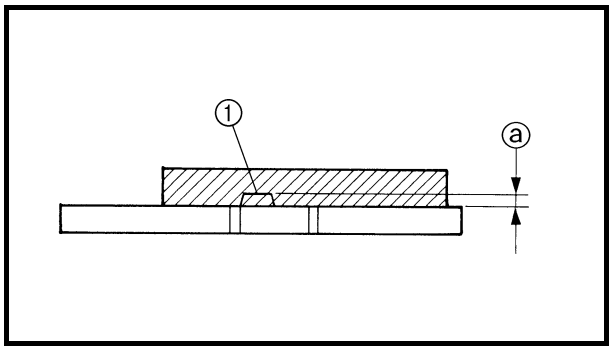

EBS00089

CHECKING THE REAR BRAKE PADS

1. Check:
   - brake pads
     Wear indicator ① almost touch the brake disc → Replace the brake pads as a set.
     Refer to “FRONT AND REAR BRAKES” in chapter 7.

	Brake pad wear limit ⓐ **1.0 mm (0.04 in)**

2. Operate the brake pedal.

ADJUSTING THE REAR BRAKE LIGHT SWITCH

NOTE:

- The rear brake light switch is operated by movement of the brake pedal.
- The rear brake light switch is properly adjusted when the brake light comes on just before the braking effect starts.

1. Check:
   - rear brake light operation timing
     Incorrect → Adjust.

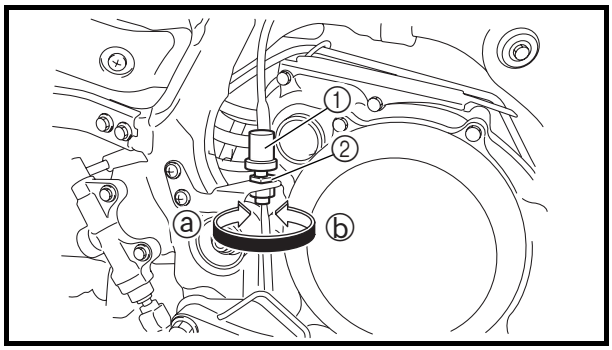

2. Adjust:
   - rear brake light operation timing

▼▼▼▼▼▼▼▼▼▼▼▼▼▼▼▼▼▼▼▼▼▼▼▼▼▼▼▼▼▼▼▼▼

a. Hold the main body ① of the rear brake light switch so that it does not rotate and turn the adjusting nut ② in direction ⓐ or ⓑ until the rear brake light comes on at the proper time.

Direction ⓐ	**Brake light comes on sooner.**
Direction ⓑ	**Brake light comes on later.**

▲▲▲▲▲▲▲▲▲▲▲▲▲▲▲▲▲▲▲▲▲▲▲▲▲▲▲▲▲▲▲▲▲

EBS00092

CHECKING THE BRAKE HOSES

1. Remove:
   - seat
   - fuel tank cover
   - side covers (left and right)
   - front fender
     Refer to “SEAT, FENDERS AND FUEL TANK”.

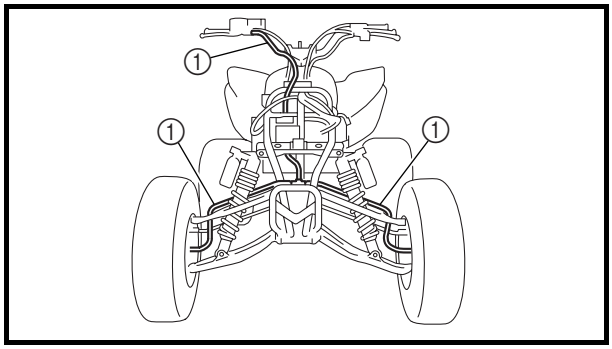

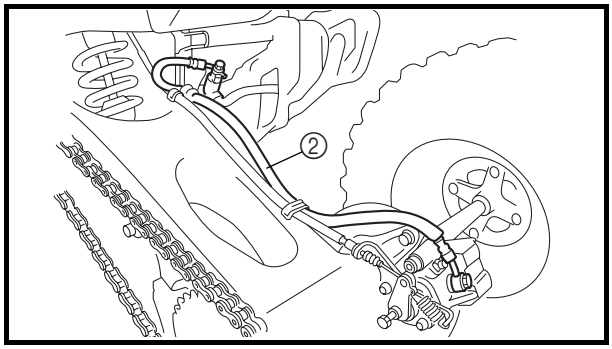

2. Check:
   - front brake hoses ①
   - rear brake hose ②
   Cracks/wear/damage → Replace.
3. Check:
   - brake hose clamps
   Loosen → Tighten.
4. Hold the machine in an upright position and apply the front or rear brake.
5. Check:
   - brake hoses
   Apply the brake lever or brake pedal several times.
   Fluid leakage → Replace the hoses.
   Refer to “FRONT AND REAR BRAKES” in chapter 7.
6. Install:
   - front fender
   - side covers (left and right)
   - fuel tank cover
   - seat
   Refer to “SEAT, FENDERS AND FUEL TANK”.

EBS00094

BLEEDING THE HYDRAULIC BRAKE SYSTEM

WARNING

Bleed the hydraulic brake system whenever:
- **the system is disassembled,**
- **a brake hose is loosened, disconnected or replaced,**
- **the brake fluid level is very low,**
- **brake operation is faulty.**

NOTE:

- Be careful not to spill any brake fluid or allow the brake master cylinder reservoir or brake fluid reservoir to overflow.
- When bleeding the hydraulic brake system, make sure there is always enough brake fluid before applying the brake. Ignoring this precaution could allow air to enter the hydraulic brake system, considerably lengthening the bleeding procedure.
- If bleeding is difficult, it may be necessary to let the brake fluid settle for a few hours. Repeat the bleeding procedure when the tiny bubbles in the hose have disappeared.

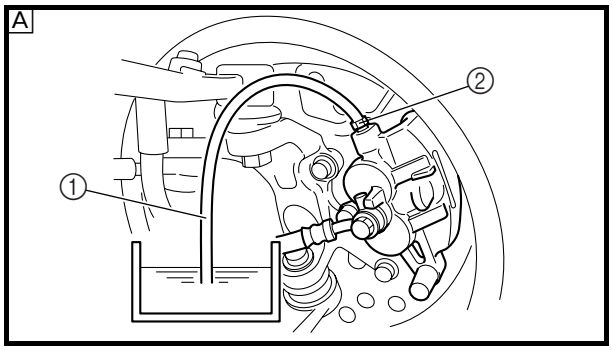

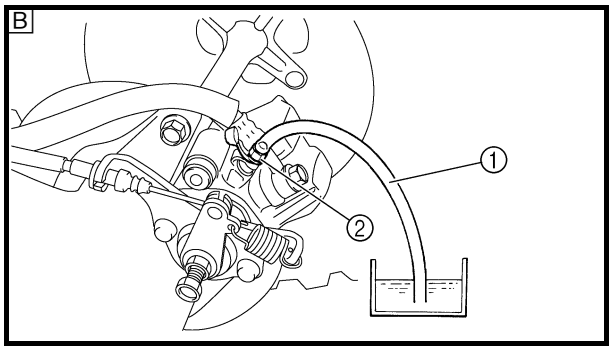

1. Bleed:
   - hydraulic brake system

▼▼▼▼▼▼▼▼▼▼▼▼▼▼▼▼▼▼▼▼▼▼▼▼▼▼▼▼▼▼▼▼▼▼▼

a. Fill the brake fluid reservoir to the proper level with the recommended brake fluid.

b. Install the diaphragm (brake master cylinder reservoir or brake fluid reservoir).

c. Connect a clear plastic hose ① tightly to the bleed screw ②.

[A] Front

[B] Rear

d. Place the other end of the hose into a container.

e. Slowly apply the brake lever or brake pedal several times.

f. Fully squeeze the brake lever or fully depress the brake pedal and hold it in position.

g. Loosen the bleed screw.

NOTE:

Loosening the bleed screw will release the pressure and cause the brake lever to contact the throttle grip or the brake pedal to fully extend.

h. Tighten the bleed screw and then release the brake lever or brake pedal.

i. Repeat steps (e) to (h) until all of the air bubbles have disappeared from the brake fluid in the plastic hose.
j. Tighten the bleed screw to specification.

	**Bleed screw** **6 Nm (0.6 m · kg, 4.3 ft · lb)**

k. Fill the brake fluid reservoir to the proper level with the recommended brake fluid.
Refer to “CHECKING THE BRAKE FLUID LEVEL”.

WARNING

After bleeding the hydraulic brake system, check the brake operation.

▲▲▲▲▲▲▲▲▲▲▲▲▲▲▲▲▲▲▲▲▲▲▲▲▲▲▲▲▲▲▲▲

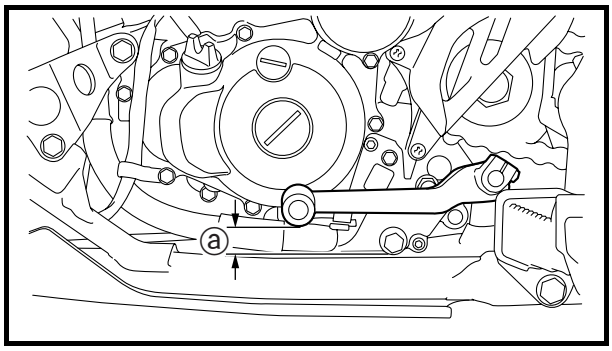

EBS00098

ADJUSTING THE SHIFT PEDAL

1. Measure:
   - shift pedal height ⓐ
     Out of specification → Adjust.

	**Shift pedal height** **25 mm (0.98 in)**

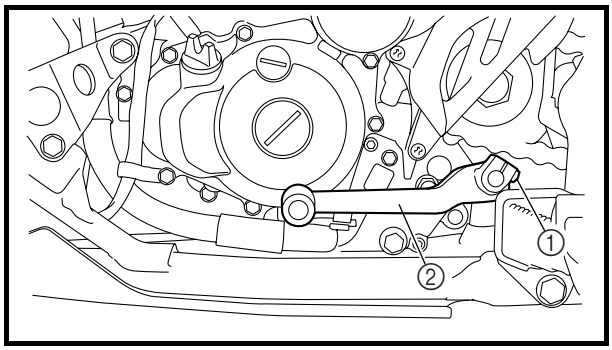

2. Adjust:
   - shift pedal position

▼▼▼▼▼▼▼▼▼▼▼▼▼▼▼▼▼▼▼▼▼▼▼▼▼▼▼▼▼▼▼▼

a. Loosen the bolt ①.
b. Remove the shift pedal ②.
c. Install the shift pedal at the correct height.
d. Tighten the bolt to specification.

12 Nm (1.2 m · kg, 8.7 ft · lb)

▲▲▲▲▲▲▲▲▲▲▲▲▲▲▲▲▲▲▲▲▲▲▲▲▲▲▲▲▲▲▲▲

ADJUSTING THE DRIVE CHAIN SLACK

NOTE:

Measure the drive chain slack halfway between the drive axle and the rear axle.

CAUTION:

A drive chain that is too tight will overload the engine and other vital parts, and one that is too loose can skip and damage the swingarm or cause an accident. Therefore, keep the drive chain slack within the specified limits.

1. Elevate the rear wheels by placing the suitable stand under the frame.

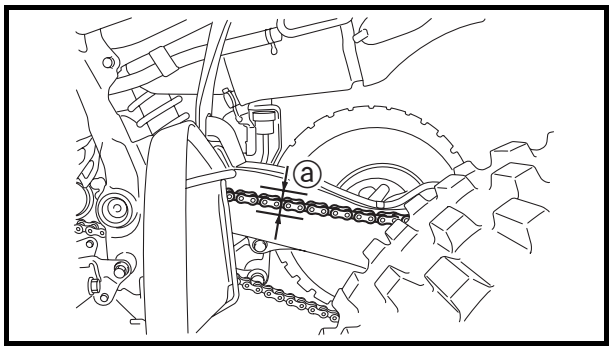

2. Measure:
   - drive chain slack ⓐ
     Out of specification → Adjust.

Drive chain slack
25 ~ 35 mm (0.98 ~ 1.38 in)

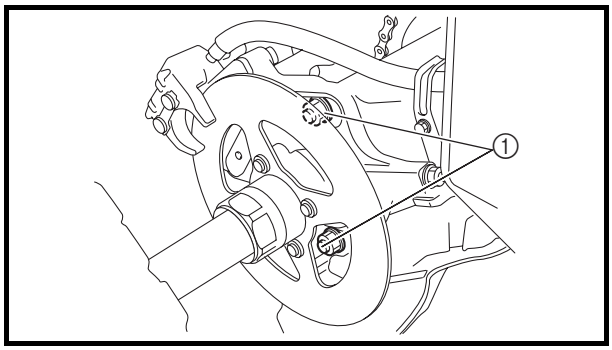

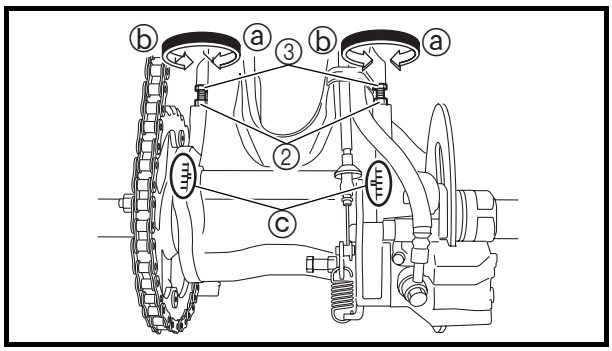

3. Adjust:
   - drive chain slack

▼▼▼▼▼▼▼▼▼▼▼▼▼▼▼▼▼▼▼▼▼▼▼▼▼▼▼▼▼▼▼▼▼▼

a. Loosen the hub nuts ①.
b. Loosen the locknuts ②.
c. Turn both adjusting bolts ③ in direction ⓐ or ⓑ until the specified drive chain slack is obtained.

Direction ⓐ	**Drive chain slack is reduced.**
Direction ⓑ	**Drive chain slack is increased.**

NOTE:

To maintain the proper axle alignment, adjust both sides evenly. (There are marks ⓒ on each side of hub.)

CAUTION:

Excessive chain slack will overload the engine and other vital parts; keep the slack within the specified limits.

d. If the chain slack cannot be adjusted, replace the sprockets and drive chain as a set.
e. Tighten the hub nuts and locknuts.

Hub nut
85 Nm (8.5 m · kg, 61 ft · lb)
Locknut (chain puller)
16 Nm (1.6 m · kg, 11 ft · lb)

NOTE:
The chain should be cleaned and lubricated after every use of the machine.

▲▲▲▲▲▲▲▲▲▲▲▲▲▲▲▲▲▲▲▲▲▲▲▲▲▲▲▲▲▲▲▲▲▲

EBS00106

CHECKING THE STEERING SYSTEM

1. Place the machine on a level surface.
2. Check:
   - steering assembly bushings
     Move the handlebar up and down, and/or back and forth.
     Excessive play → Replace the steering stem bushings.

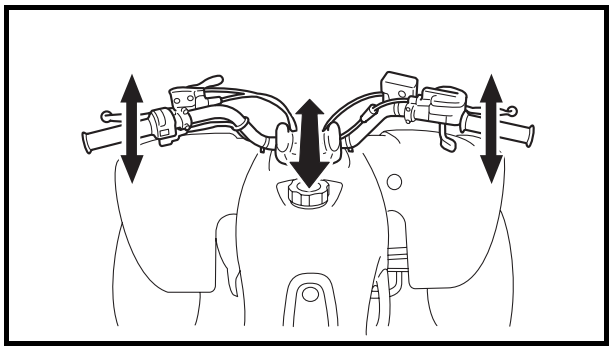

3. Check:
   - tie-rod ends
     Turn the handlebar to the left and right until it stops completely, and then move the handlebar slightly in the opposite direction.
     Tie-rod end(s) ① have vertical play → Replace the tie-rod end(s).

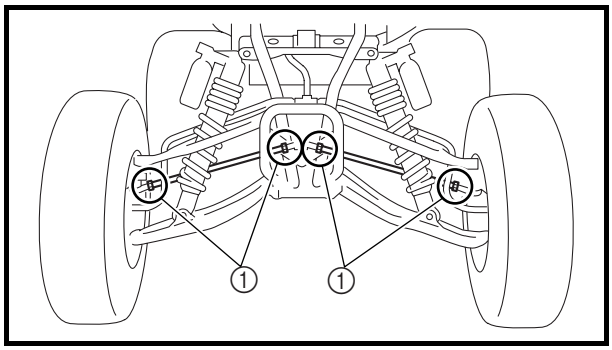

4. Raise the front end of the machine so that there is no weight on the front wheels.
5. Check:
   - ball joints and/or wheel bearings
     Move the wheels laterally back and forth.
     Excessive free play → Replace the front arms (upper and lower) and/or wheel bearings.

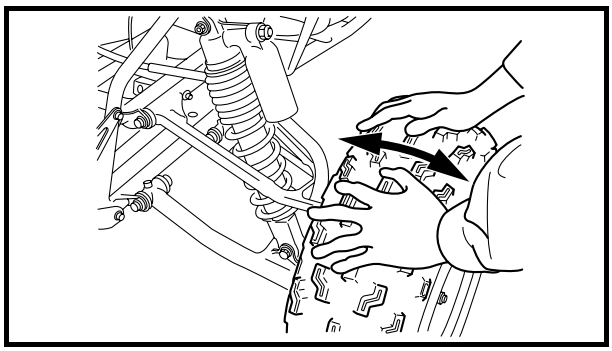

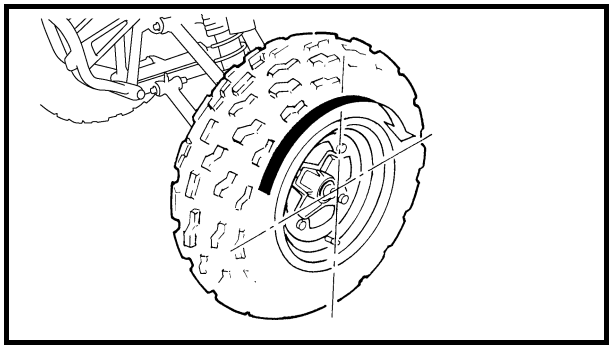

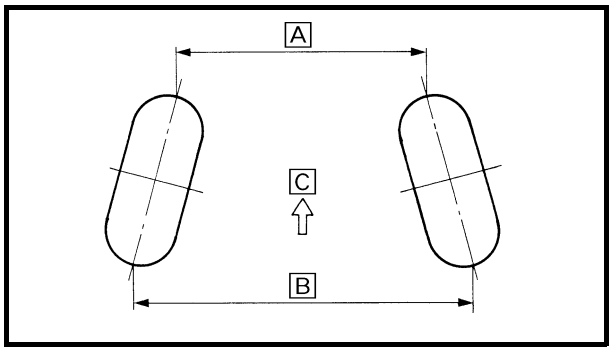

EBS00108

ADJUSTING THE TOE-IN

1. Place the machine on a level surface.
2. Measure:
   - toe-in
     Out of specification → Adjust.

	Toe-in **2 ~ 12 mm (0.08 ~ 0.47 in)**

▼▼▼▼▼▼▼▼▼▼▼▼▼▼▼▼▼▼▼▼▼▼▼▼▼▼▼▼▼▼▼▼▼▼

NOTE:

Before measuring the toe-in, make sure that the tire pressure is correct.

a. Mark both front tire tread centers.
b. Raise the front end of the machine so that there is no weight on the front tires.
c. Face the handlebar straight ahead.
d. Measure the width A between the marks.
e. Rotate the front tires 180° until the marks are exactly opposite one another.
f. Measure the width B between the marks.
g. Calculate the toe-in using the formula given below.

Toe-in = B – A

h. If the toe-in is incorrect, adjust it.

C Forward

▲▲▲▲▲▲▲▲▲▲▲▲▲▲▲▲▲▲▲▲▲▲▲▲▲▲▲▲▲▲▲▲▲▲

3. Adjust:
   - toe-in

WARNING

- **Be sure that both tie-rods are turned the same amount. If not, the machine will drift right or left even though the handlebar is positioned straight. This may lead to mishandling and an accident.**
- **After setting the toe-in to specification, run the machine slowly for some distance with both hands lightly holding the handlebar and check that the handlebar responds correctly. If not, turn either the right or left tie-rod within the toe-in specification.**

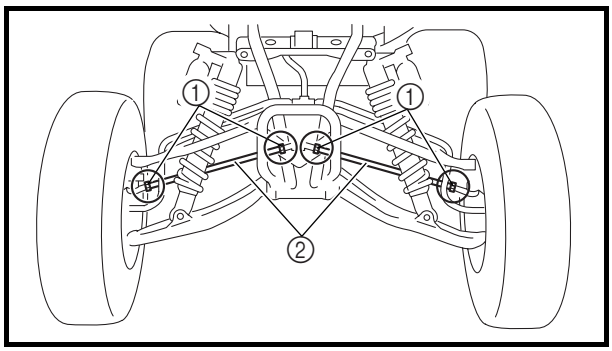

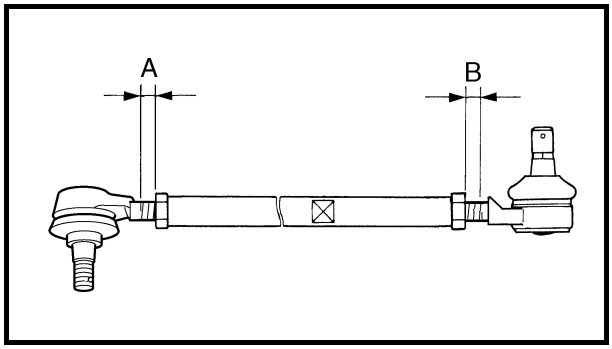

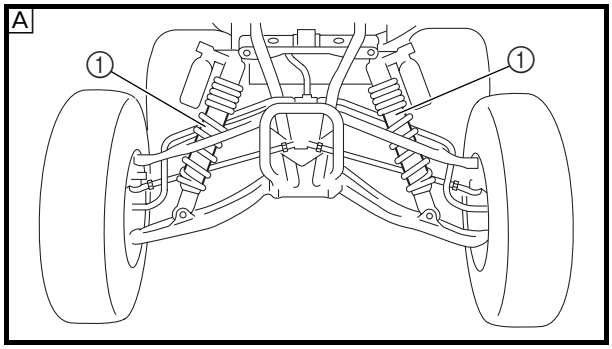

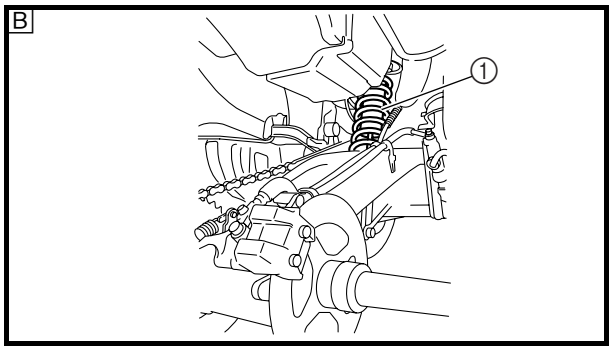

a. Mark both tie-rods ends.
   This reference point will be needed during adjustment.
b. Loosen the locknuts (tie-rod end) ① of both tie-rods.
c. The same number of turns should be given to both the right and left tie-rods ② until the specified toe-in is obtained. This is to keep the length of the rods the same.
d. Tighten the rod end locknuts of both tie-rods.

	**Locknut (rod end)** **15 Nm (1.5 m · kg, 11 ft · lb)**

NOTE:
Adjust the rod ends so that A and B are equal.

EBS00109

CHECKING THE FRONT AND REAR SHOCK ABSORBERS

1. Place the machine on a level surface.
2. Check:
   - damper rod ①
     Bends/damage → Replace the front/rear shock absorber assembly.
   - oil leakage
     Excessive oil leakage → Replace the front/rear shock absorber assembly.
   - gas cylinder
     Damage/gas leaks → the front/rear shock absorber assembly.
   - spring
     Fatigue → the front/rear shock absorber assembly.
     Refer to “FRONT ARMS AND FRONT SHOCK ABSORBER ASSEMBLIES” and “REAR SHOCK ABSORBER AND RELAY ARM” in chapter 7.
3. Check:
   - operation
     Pump the shock absorbers up and down for several times.
     Unsmooth operation → Replace the front/rear shock absorber assembly.
     Refer to “ADJUSTING THE FRONT SHOCK ABSORBERS” and “ADJUSTING THE REAR SHOCK ABSORBER”.

A Front shock absorber
B Rear shock absorber

EBS00111

ADJUSTING THE FRONT SHOCK ABSORBERS

WARNING

Always adjust the spring preload, rebound damping force and compression damping force of both front shock absorbers to the same setting. Uneven adjustment can result in poor handling and loss of stability.

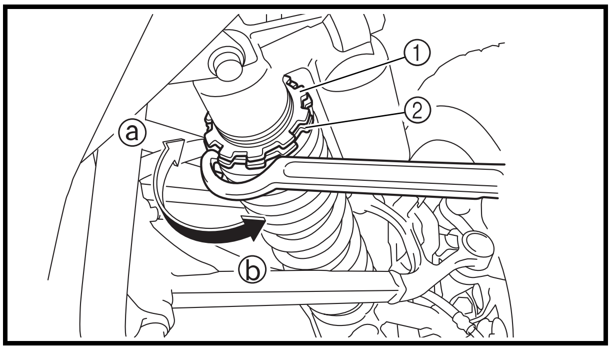

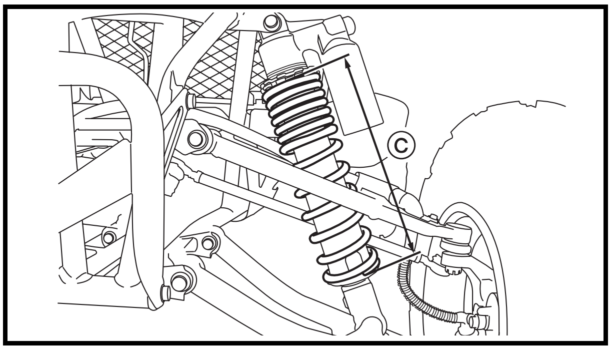

1. Adjust:
   - spring preload

▼▼▼▼▼▼▼▼▼▼▼▼▼▼▼▼▼▼▼▼▼▼▼▼▼▼▼▼▼▼▼▼▼▼

a. Elevate the front wheels by placing a suitable stand under the frame.

b. Loosen the locknut ①.

c. Turn the adjusting ring ② in direction ⓐ or ⓑ.

Direction ⓐ	**Spring preload is increased (suspension is harder).**
Direction ⓑ	**Spring preload is decreased (suspension is softer).**

Adjusting length ⓒ
Standard: 255 mm (10.04 in)
Minimum: 245 mm (9.65 in)
Maximum: 256.5 mm (10.10 in)

NOTE:
- Be sure to remove all dirt and mud from around the locknut and adjusting ring before adjustment.
- The length of the spring (installed) changes 1.5 mm (0.06 in) per turn of the adjuster.

CAUTION:

Never attempt to turn the adjusting ring beyond the maximum or minimum setting.

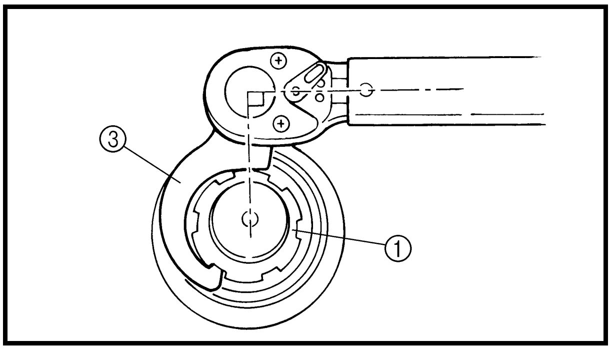

d. Tighten the locknut ① with a steering nut wrench ③.

NOTE:
Set the torque wrench at a right angle to the steering nut wrench.

	**Steering nut wrench** **P/N. YU-33975, 90890-01443**

	**Locknut** **30 Nm (3.0 m · kg, 22 ft · lb)**

NOTE:
Always tighten the locknut against the adjusting ring, then torque it to specification.

▲▲▲▲▲▲▲▲▲▲▲▲▲▲▲▲▲▲▲▲▲▲▲▲▲▲▲▲▲▲▲▲

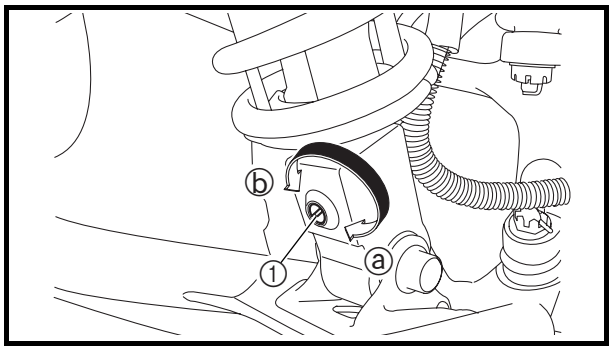

2. Adjust:
   - rebound damping force

▼▼▼▼▼▼▼▼▼▼▼▼▼▼▼▼▼▼▼▼▼▼▼▼▼▼▼▼▼▼▼▼

a. Turn the adjusting screw ① in direction ⓐ or ⓑ.

Direction ⓐ	**Rebound damping force is increased.**
Direction ⓑ	**Rebound damping force is decreased.**

From the fully turned-in position
Standard: 12 clicks out
Minimum: 22 clicks out
Maximum: 1 click out

CAUTION:
Do not force the adjuster past the minimum or maximum extent of adjustment. The adjuster may be damaged.

▲▲▲▲▲▲▲▲▲▲▲▲▲▲▲▲▲▲▲▲▲▲▲▲▲▲▲▲▲▲▲▲

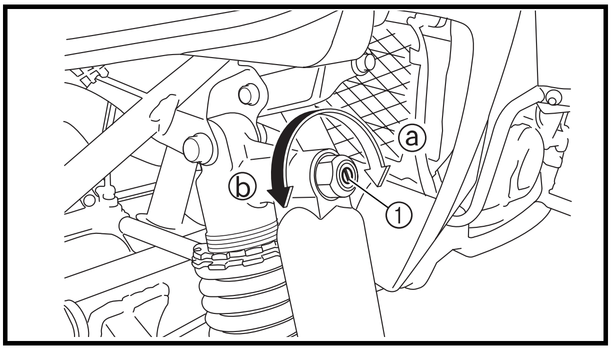

3. Adjust:
   - compression damping force

▼▼▼▼▼▼▼▼▼▼▼▼▼▼▼▼▼▼▼▼▼▼▼▼▼▼▼▼▼▼▼▼▼

a. Turn the adjusting screw ① in direction ⓐ or ⓑ.

Direction ⓐ	**Compression damping force is increased.**
Direction ⓑ	**Compression damping force is decreased.**

From the fully turned-in position
Standard: 11 clicks out
Minimum: 22 clicks out
Maximum: 1 click out

CAUTION:

Do not force the adjuster past the minimum or maximum extent of adjustment. The adjuster may be damaged.

▲▲▲▲▲▲▲▲▲▲▲▲▲▲▲▲▲▲▲▲▲▲▲▲▲▲▲▲▲▲▲▲▲

EBS00111

ADJUSTING THE REAR SHOCK ABSORBER

1. Remove:
   - seat
     Refer to “SEAT, FENDERS AND FUEL TANK”.

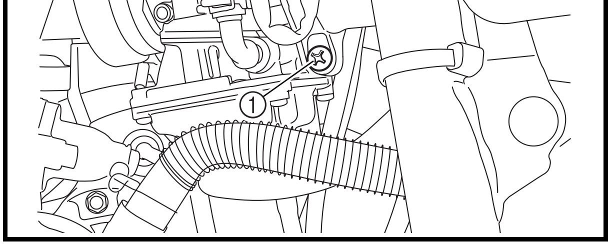

2. Loosen the clamp screw ①, and then disconnect the air intake duct.

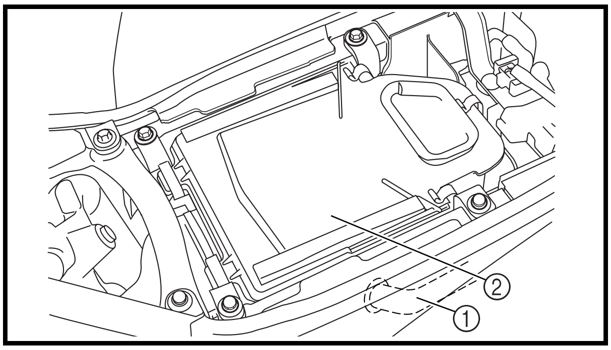

3. Disconnect the air filter case breather hose ①, and then remove the air filter case ② with the air intake duct.

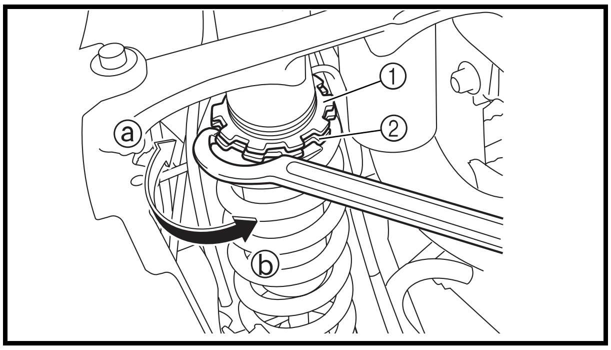

4. Adjust:
   - spring preload

▼▼▼▼▼▼▼▼▼▼▼▼▼▼▼▼▼▼▼▼▼▼▼▼▼▼▼▼▼▼▼▼▼▼

a. Elevate the rear wheels by placing a suitable stand under the frame.

b. Loosen the locknut ①.

c. Turn the adjusting ring ② in direction ⓐ or ⓑ.

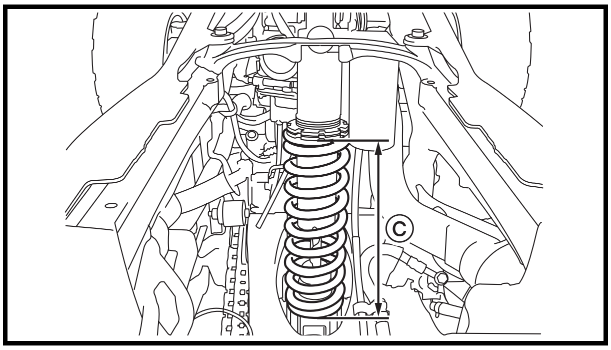

Direction ⓐ	**Spring preload is increased (suspension is harder).**
Direction ⓑ	**Spring preload is decreased (suspension is softer).**

Adjusting length ⓒ
Standard: 244 mm (9.61 in)
Minimum: 237 mm (9.33 in)
Maximum: 251 mm (9.88 in)

NOTE:

- Be sure to remove all dirt and mud from around the locknut and adjusting ring before adjustment.
- The length of the spring (installed) changes 1.5 mm (0.06 in) per turn of the adjuster.

CAUTION:

Never attempt to turn the adjusting ring beyond the maximum or minimum setting.

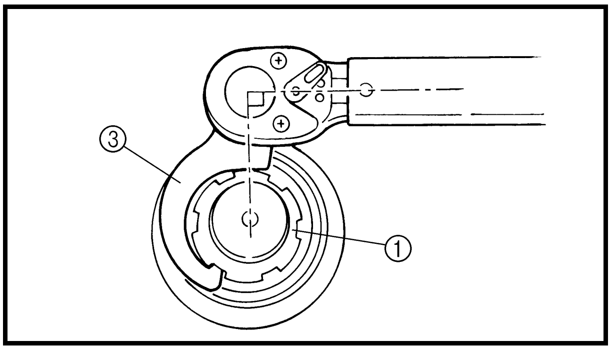

d. Tighten the locknut ① with a steering nut wrench ③.

NOTE:

Set the torque wrench at a right angle to the steering nut wrench.

	**Steering nut wrench** **P/N. YU-33975, 90890-01443**

	**Locknut** **45 Nm (4.5 m · kg, 32 ft · lb)**

NOTE:
Always tighten the locknut against the adjusting ring, then torque it to specification.

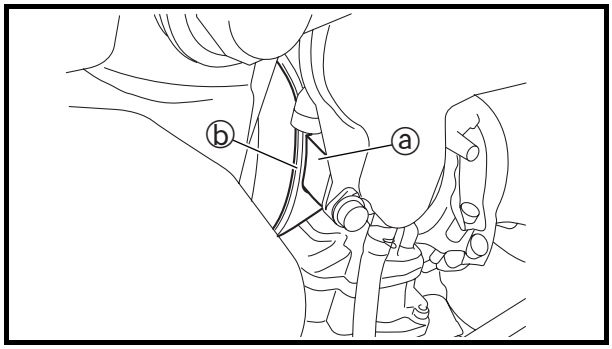

▲▲▲▲▲▲▲▲▲▲▲▲▲▲▲▲▲▲▲▲▲▲▲▲▲▲▲▲▲▲▲▲

5. Install:
   - air filter case with air intake duct

NOTE:
Align the projection ⓐ on the carburetor with the slot ⓑ in the air intake duct.

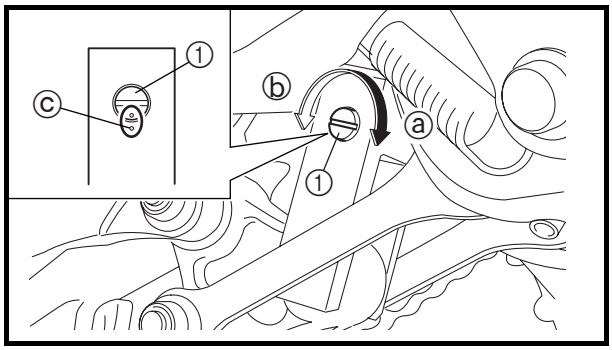

6. Adjust:
   - rebound damping force

▼▼▼▼▼▼▼▼▼▼▼▼▼▼▼▼▼▼▼▼▼▼▼▼▼▼▼▼▼▼▼▼

a. Turn the adjusting screw ① in direction ⓐ or ⓑ.

Direction ⓐ	**Rebound damping force is increased.**
Direction ⓑ	**Rebound damping force is decreased.**

Minimum (soft): Adjusting screw fully turned out
Standard: Adjusting screw 1 3/4 turns out from the fully turned in position
Maximum (hard): Adjusting screw fully turned in

NOTE:
Make sure that the position indicator marks ⓒ are aligned when the shock absorber is set to the standard setting.

CAUTION:
Do not force the adjuster past the minimum or maximum extent of adjustment. The adjuster may be damaged.

▲▲▲▲▲▲▲▲▲▲▲▲▲▲▲▲▲▲▲▲▲▲▲▲▲▲▲▲▲▲▲▲

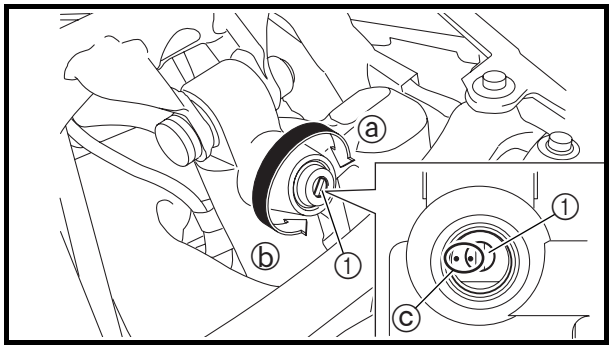

7. Adjust:
   - compression damping force

▼▼▼▼▼▼▼▼▼▼▼▼▼▼▼▼▼▼▼▼▼▼▼▼▼▼▼▼▼▼▼▼▼▼

a. Turn the adjusting screw ① in direction ⓐ or ⓑ.

Direction ⓐ	**Compression damping force is increased.**
Direction ⓑ	**Compression damping force is decreased.**

Minimum (soft): Adjusting screw fully turned out
Standard: Adjusting screw 1 3/4 turns out from the fully turned in position
Maximum (hard): Adjusting screw fully turned in

NOTE:
Make sure that the position indicator marks ⓒ are aligned when the shock absorber is set to the standard setting.

CAUTION:
Do not force the adjuster past the minimum or maximum extent of adjustment. The adjuster may be damaged.

▲▲▲▲▲▲▲▲▲▲▲▲▲▲▲▲▲▲▲▲▲▲▲▲▲▲▲▲▲▲▲▲▲▲

8. Install:
   - seat
     Refer to “SEAT, FENDERS AND FUEL TANK”.

EBS00114

CHECKING THE TIRES

WARNING

This model is equipped with low pressure tires. It is important that they be inflated correctly and maintained at the proper pressures.

• TIRE CHARACTERISTICS

1) Tire characteristics influence the handling of ATVs. The tires listed below have been approved by Yamaha Motor Co., Ltd. for this model. If other tire combinations are used, they can adversely affect your machine's handling characteristics and are therefore not recommended.

	Manufacturer	Size	Type
Front	DUNLOP	AT21 × 7-10	KT331A Radial
Rear	DUNLOP	AT20 × 10-9	KT355 Radial

• TIRE PRESSURE

1) Recommended tire pressure
Front 30 kPa (0.30 kg/cm^2, 4.4 psi)
Rear 35 kPa (0.35 kg/cm^2, 5.0 psi)

2) Tire pressure below the minimum specification could cause the tire to dislodge from the rim under severe riding conditions.
The following are minimums:
Front 27 kPa (0.27 kg/cm^2, 3.9 psi)
Rear 32 kPa (0.32 kg/cm^2, 4.5 psi)

3) Use no more than
Front 250 kPa (2.5 kg/cm^2, 36 psi)
Rear 250 kPa (2.5 kg/cm^2, 36 psi)
when seating the tire beads. Higher pressures may cause the tire to burst.
Inflate the tires slowly and carefully.
Fast inflation could cause the tire to burst.

• MAXIMUM LOADING LIMIT

1) Vehicle load limits: 100 kg (220 lb)
***Total weight of the cargo, rider, and accessories.**

Be extra careful of the machine balance and stability when towing a trailer.

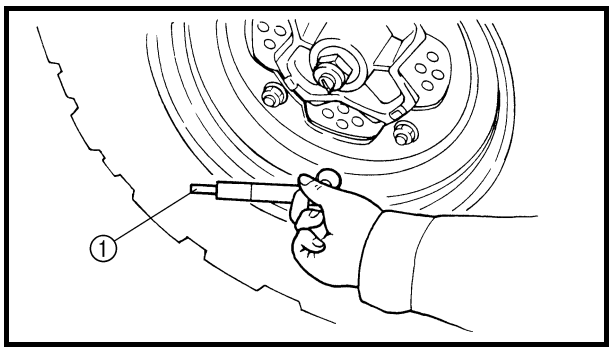

1. Measure:
   - tire pressure
     Out of specification → Adjust.

NOTE:
- The low-pressure tire gauge ① is included as standard equipment.
- If dust or the like is stuck to this gauge, it will not provide the correct readings. Therefore, take two measurements of the tire's pressure and use the second reading.

Cold tire pressure	Front	Rear
Standard	**30 kPa (0.30 kg/cm², 4.4 psi)**	**35 kPa (0.35 kg/cm², 5.0 psi)**
Minimum	**27 kPa (0.27 kg/cm², 3.9 psi)**	**32 kPa (0.32 kg/cm², 4.5 psi)**
Maximum	**33 kPa (0.33 kg/cm², 4.7 psi)**	**38 kPa (0.38 kg/cm², 5.4 psi)**

⚠ WARNING

Uneven or improper tire pressure may adversely affect the handling of this machine and may cause loss of control.
- **Maintain proper tire pressures.**
- **Set tire pressures when the tires are cold.**
- **Tire pressures must be equal in both front tires and equal in both rear tires.**

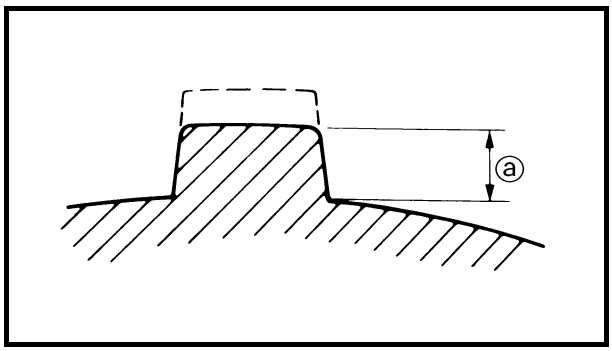

2. Check:
   - tire surfaces
     Wear/damage → Replace.

Tire wear limit ⓐ
Front and rear: 3.0 mm (0.12 in)

⚠ WARNING

It is dangerous to ride with a worn-out tire. When tire wear is out of specification, replace the tire immediately.

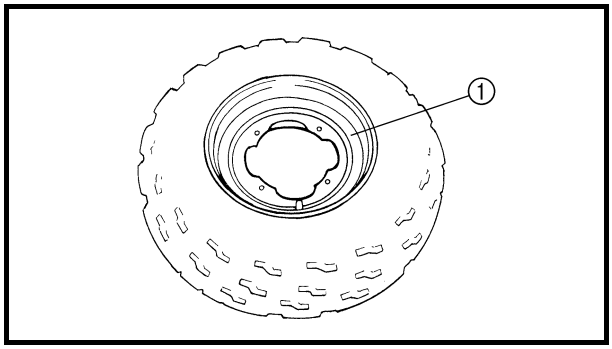

EBS00116
CHECKING THE WHEELS

1. Check:
   - wheel ①
     Damage/bends → Replace.

NOTE:
Always balance the wheel when a tire or wheel has been changed or replaced.

WARNING
- **Never attempt even small repairs to the wheel.**
- **Ride conservatively after installing a tire to allow it to seat itself properly on the rim.**

EBS00117
CHECKING AND LUBRICATING THE CABLES

WARNING
A damaged cable sheath may cause corrosion and interfere with the cable movement. An unsafe condition may result so replace a damaged cable as soon as possible.

1. Check:
   - cable sheath
     Damage → Replace.
2. Check:
   - cable operation
     Unsmooth operation → Lubricate or replace.

Recommended lubricant
Yamaha chain and cable lube or engine oil

NOTE:
Hold the cable end up and apply several drops of lubricant to the cable.

3. Apply:
   - Lithium-soap-based grease
     (onto end of the cable)

EBS00118

LUBRICATING THE LEVERS AND PEDALS

Lubricate the pivoting point and metal-to-metal moving parts of the levers and pedals.

	Recommended lubricant **Lithium-soap-based grease**

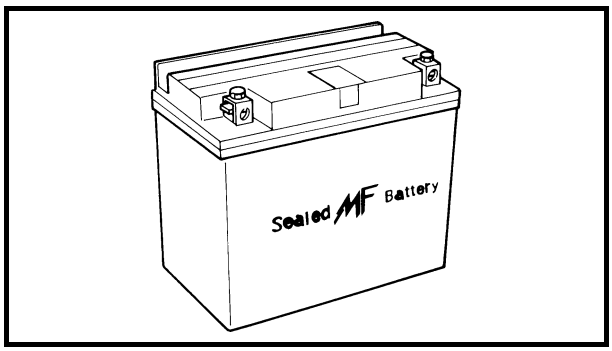

EBS00120

ELECTRICAL SYSTEM

CHECKING AND CHARGING THE BATTERY

WARNING

Batteries generate explosive hydrogen gas and contain electrolyte which is made of poisonous and highly caustic sulfuric acid. Therefore, always follow these preventive measures:

- **Wear protective eye gear when handling or working near batteries.**
- **Charge batteries in a well-ventilated area.**
- **Keep batteries away from fire, sparks or open flames (e.g., welding equipment, lighted cigarettes).**
- **DO NOT SMOKE when charging or handling batteries.**
- **KEEP BATTERIES AND ELECTROLYTE OUT OF REACH OF CHILDREN.**
- **Avoid bodily contact with electrolyte as it can cause severe burns or permanent eye injury.**

FIRST AID IN CASE OF BODILY CONTACT:
EXTERNAL

- **Skin — Wash with water.**
- **Eyes — Flush with water for 15 minutes and get immediate medical attention.**

INTERNAL

- **Drink large quantities of water or milk followed with milk of magnesia, beaten egg or vegetable oil. Get immediate medical attention.**

CAUTION:

- **This is a sealed battery. Never remove the sealing caps because the balance between cells will not be maintained and battery performance will deteriorate.**
- **Charging time, charging amperage and charging voltage for an MF battery are different from those of conventional batteries. The MF battery should be charged as explained in the charging method illustrations. If the battery is overcharged, the electrolyte level will drop considerably. Therefore, take special care when charging the battery.**

NOTE:
Since MF batteries are sealed, it is not possible to check the charge state of the battery by measuring the specific gravity of the electrolyte. Therefore, the charge of the battery has to be checked by measuring the voltage at the battery terminals.

1. Remove:
   - seat
     Refer to “SEAT, FENDERS AND FUEL TANK”.

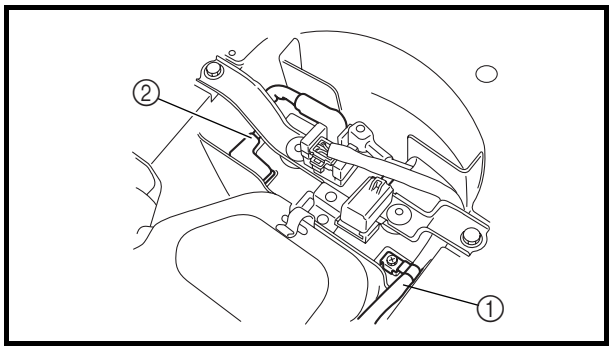

2. Disconnect:
   - battery leads
     (from the battery terminals)

CAUTION:
First, disconnect the negative battery lead ①, and then the positive battery lead ②.

3. Remove:
   - battery holding bracket
     Refer to “SEAT, FENDERS AND FUEL TANK”.
4. Remove:
   - battery
5. Check:
   - battery charge

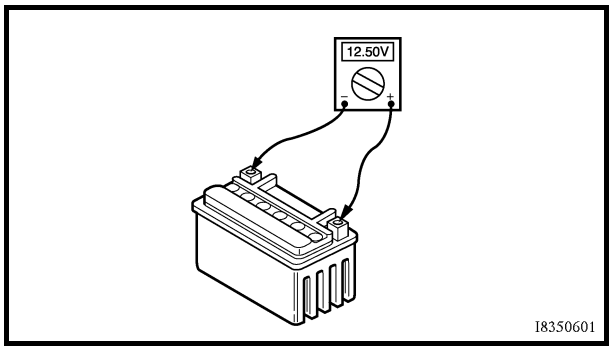

▼▼▼▼▼▼▼▼▼▼▼▼▼▼▼▼▼▼▼▼▼▼▼▼▼▼▼▼▼▼▼▼▼▼

a. Connect a pocket tester to the battery terminals.

Positive tester probe →
positive battery terminal
Negative tester probe →
negative battery terminal

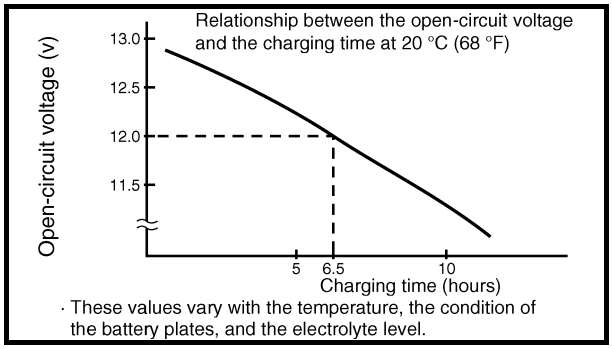

NOTE:
- The charge state of an MF battery can be checked by measuring its open-circuit voltage (i.e., the voltage when the positive terminal is disconnected).
- No charging is necessary when the open-circuit voltage equals or exceeds 12.8 V.

b. Check the charge of the battery, as shown in the charts and the following example.

Example

c. Open-circuit voltage = 12.0 V
d. Charging time = 6.5 hours
e. Charge of the battery = 20 ~ 30%

▲▲▲▲▲▲▲▲▲▲▲▲▲▲▲▲▲▲▲▲▲▲▲▲▲▲▲▲▲▲▲▲

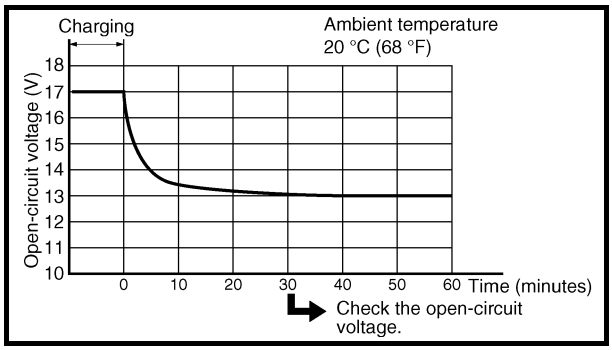

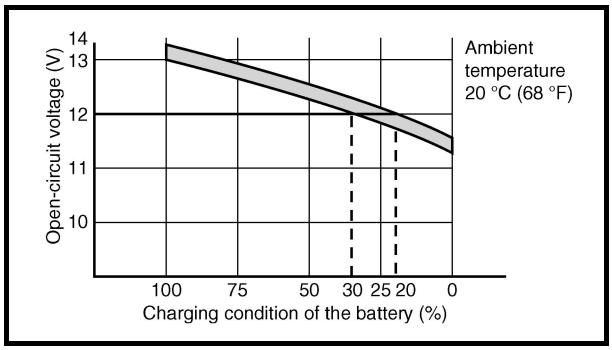

6. Charge:
   - battery
     (refer to the appropriate charging method illustration)

⚠ WARNING

Do not quick charge a battery.

CAUTION:
- **Never remove the MF battery sealing caps.**
- **Do not use a high-rate battery charger since it forces a high-amperage current into the battery quickly and can cause battery overheating and battery plate damage.**
- **If it is impossible to regulate the charging current on the battery charger, be careful not to overcharge the battery.**
- **When charging a battery, be sure to remove it from the machine. (If charging has to be done with the battery mounted on the machine, disconnect the negative battery lead from the battery terminal.)**
- **To reduce the chance of sparks, do not plug in the battery charger until the battery charger leads are connected to the battery.**

- **Before removing the battery charger lead clips from the battery terminals, be sure to turn off the battery charger.**
- **Make sure the battery charger lead clips are in full contact with the battery terminal and that they are not shorted. A corroded battery charger lead clip may generate heat in the contact area and a weak clip spring may cause sparks.**
- **If the battery becomes hot to the touch at any time during the charging process, disconnect the battery charger and let the battery cool before reconnecting it. Hot batteries can explode!**
- **As shown in the following illustration, the open-circuit voltage of an MF battery stabilizes about 30 minutes after charging has been completed. Therefore, wait 30 minutes after charging is completed before measuring the open-circuit voltage.**

Charging method using a variable-current (voltage) charger

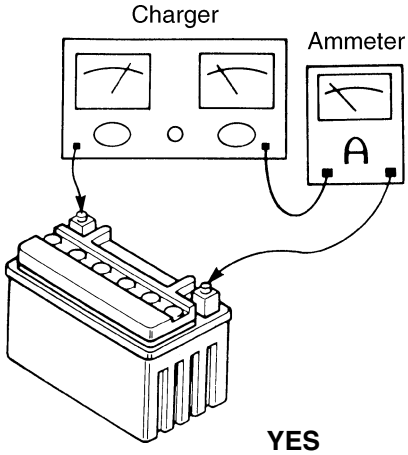

Measure the open-circuit voltage prior to charging.

NOTE:
Leave the battery unused for more than 30 minutes before measuring its open-circuit voltage.

Connect a charger and ammeter to the battery and start charging.

NOTE:
Set the charging voltage to 16 ~ 17 V. (If the charging voltage is lower, charging will be insufficient, if it is higher, the battery will be over-charged.)

Is the amperage higher than the standard charging amperage written on the battery?

YES → Adjust the voltage to obtain the standard charging amperage.

NO → Adjust the charging voltage to 20 ~ 25 V.

Monitor the amperage for 3 ~ 5 minutes. Is the standard charging amperage exceeded?

YES → Adjust the voltage to obtain the standard charging amperage.

NO → If the amperage does not exceed the standard charging amperage after 5 minutes, replace the battery.

Set the timer to the charging time determined by the open-circuit voltage.
Refer to “CHECKING AND CHARGING THE BATTERY”.

If the required charging time exceeds 5 hours, it is advisable to check the charging amperage after 5 hours. If there is any change in the amperage, readjust the voltage to obtain the standard charging amperage.

Leave the battery unused for more than 30 minutes before measuring its open-circuit voltage.
12.8 V → Charging is complete.
12.0 ~ 12.7 V → Recharging is required.
Under 12.0 V → Replace the battery.

Charging method using a constant voltage charger

Measure the open-circuit voltage prior to charging.

NOTE:
Leave the battery unused for more than 30 minutes before measuring its open-circuit voltage.

↓

Connect a charger and ammeter to the battery and start charging.

↓

Is the amperage higher than the standard charging amperage written on the battery?

→ Charge the battery until the charging voltage reaches 15 V.

NOTE:
Set the charging time to a maximum of 20 hours.

→ Leave the battery unused for more than 30 minutes before measuring its open-circuit voltage.
12.8 V → Charging is complete.
12.0 ~ 12.7 V → Recharging is required.
Under 12.0 V → Replace the battery.

CAUTION:
Constant amperage chargers are not suitable for charging MF batteries.

→ This type of battery charger cannot charge an MF battery. A variable-voltage charger is recommended.

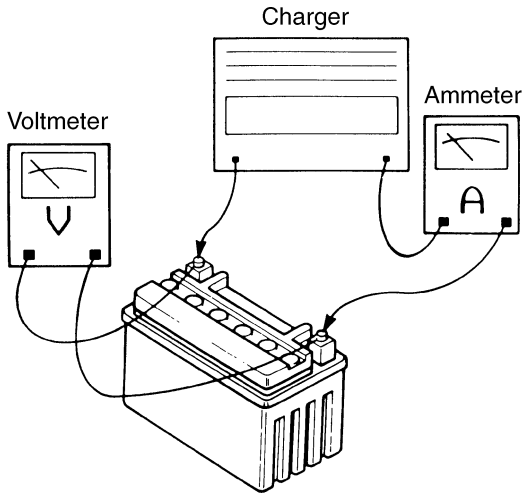

7. Install:
   - battery
8. Install:
   - battery holding bracket
     Refer to “SEAT, FENDERS AND FUEL TANK”.

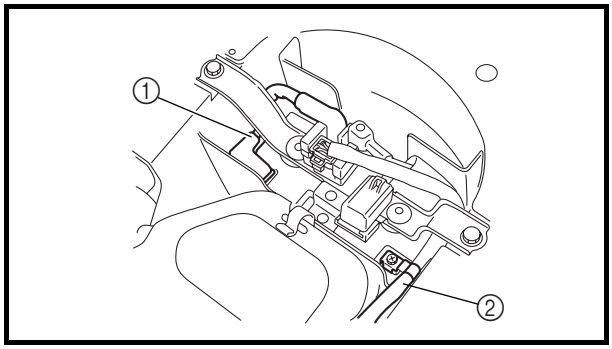

9. Connect:
   - battery leads
     (to the battery terminals)

CAUTION:

First, connect the positive battery lead ①, and then the negative battery lead ②.

10. Check:
    - battery terminals
      Dirt → Clean with a wire brush.
      Loose connection → Connect properly.
11. Lubricate:
    - battery terminals

	Recommended lubricant **Dielectric grease**

12. Install:
    - seat
      Refer to “SEAT, FENDERS AND FUEL TANK”.

EBS00121

CHECKING THE FUSES

The following procedure applies to all of the fuses.

CAUTION:

To avoid a short circuit, always set the main switch to "OFF" when checking or replacing a fuse.

1. Remove:
   - seat
     Refer to "SEAT, FENDERS AND FUEL TANK".

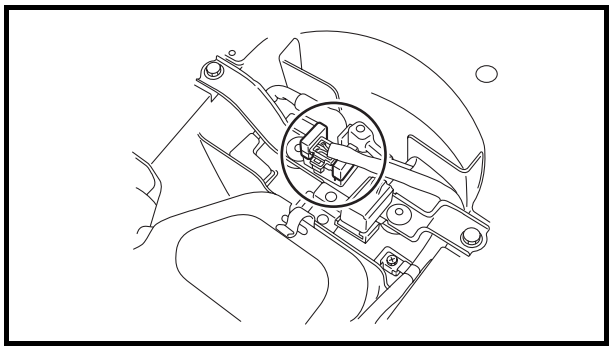

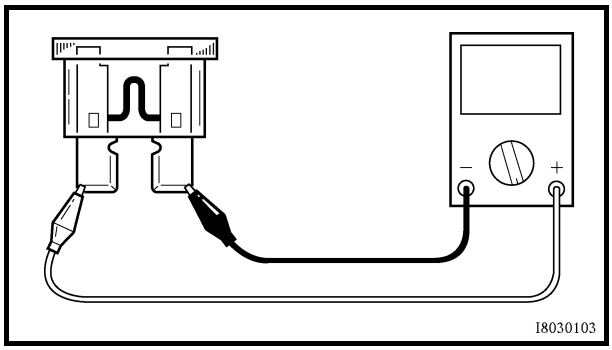

2. Check:
   - fuse

▼▼▼▼▼▼▼▼▼▼▼▼▼▼▼▼▼▼▼▼▼▼▼▼▼▼▼▼▼▼▼▼▼▼

a. Connect the pocket tester to the fuse and check the continuity.

NOTE:

Set the pocket tester selector to "Ω × 1".

	**Pocket tester** **P/N. YU-03112-C, 90890-03112**

b. If the pocket tester indicates "∞", replace the fuse.

▲▲▲▲▲▲▲▲▲▲▲▲▲▲▲▲▲▲▲▲▲▲▲▲▲▲▲▲▲▲▲▲▲▲

3. Replace:
   - blown fuse

▼▼▼▼▼▼▼▼▼▼▼▼▼▼▼▼▼▼▼▼▼▼▼▼▼▼▼▼▼▼▼▼▼▼

a. Set the main switch to "OFF".
b. Install a new fuse of the correct amperage.
c. Set on the switches to verify if the electrical circuit is operational.
d. If the fuse immediately blows again, check the electrical circuit.

Items	Amperage rating	Q'ty
Main	15 A	1
Reserve	15 A	1

WARNING

Never use a fuse with an amperage rating other than that specified. Improvising or using a fuse with the wrong amperage rating may cause extensive damage to the electrical system, cause the lighting and ignition systems to malfunction and could possibly cause a fire.

▲▲▲▲▲▲▲▲▲▲▲▲▲▲▲▲▲▲▲▲▲▲▲▲▲▲▲▲▲▲▲▲

4. Install:
   - seat
     Refer to "SEAT, FENDERS AND FUEL TANK".

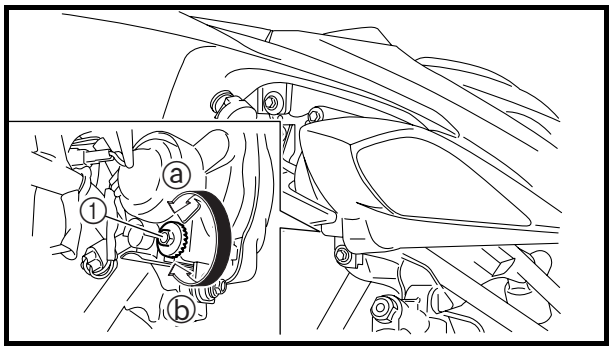

EBS00122

ADJUSTING THE HEADLIGHT BEAM

1. Adjust:
   - headlight beam (vertically)

▼▼▼▼▼▼▼▼▼▼▼▼▼▼▼▼▼▼▼▼▼▼▼▼▼▼▼▼▼▼▼▼

a. Turn the adjusting bolt ① in direction ⓐ or ⓑ.

Direction ⓐ	**Headlight beam is raised.**
Direction ⓑ	**Headlight beam is lowered.**

▲▲▲▲▲▲▲▲▲▲▲▲▲▲▲▲▲▲▲▲▲▲▲▲▲▲▲▲▲▲▲▲

EBS00124

REPLACING A HEADLIGHT BULB

1. Remove:
   - headlight
     Refer to “SEAT, FENDERS AND FUEL TANK”.

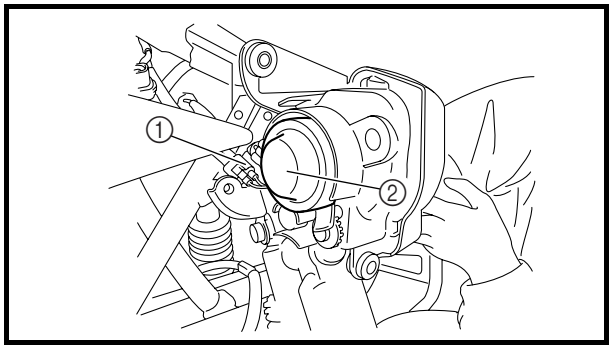

2. Disconnect:
   - headlight lead coupler ①
3. Remove:
   - headlight bulb holder cover ②

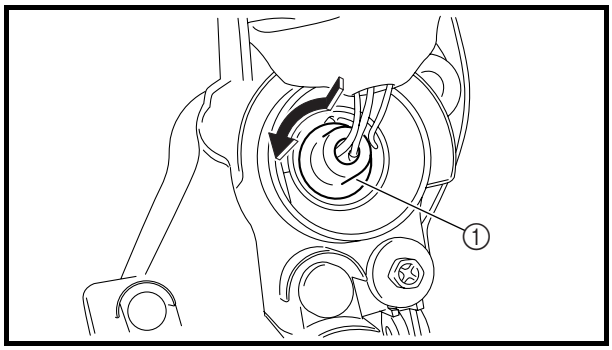

4. Remove:
   - bulb holder ①
   - bulb

NOTE:

Push the headlight bulb holder inward, turn it counterclockwise and remove the defective bulb.

⚠ WARNING

Keep flammable products and your hands away from the bulb while it is on. since it will be hot. Do not touch the bulb until it cools down.

5. Install:
   - bulb New
     Secure the new bulb with the headlight unit.

CAUTION:

Avoid touching the glass part of the bulb. Keep it free from oil; otherwise, the transparency of the glass, life of the bulb, and luminous flux will be adversely affected. If oil gets on the bulb, thoroughly clean it with a cloth moistened with alcohol or lacquer thinner.

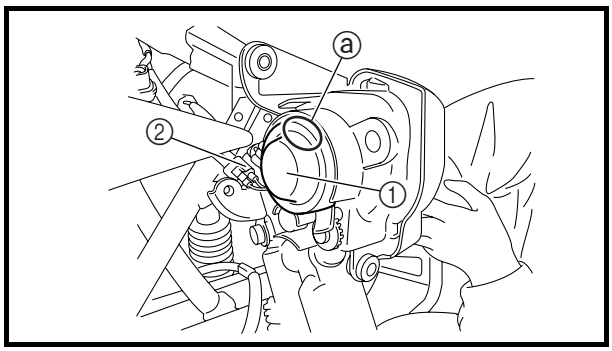

6. Install:
   - bulb holder
   - headlight bulb holder cover ①

NOTE:
After installing the bulb holder cover, make sure that the “TOP” mark ⓐ is in the position shown.

7. Connect:
   - headlight lead coupler ②
8. Install:
   - headlight
     Refer to “SEAT, FENDERS AND FUEL TANK”.

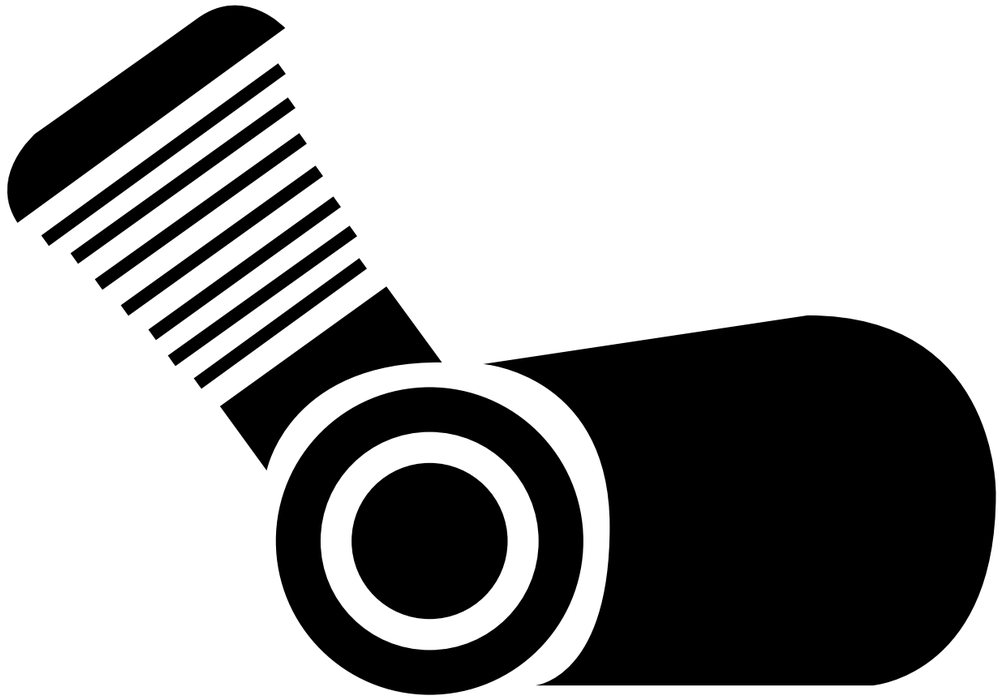

ENG 4

CHAPTER 4
ENGINE

EBS00198

ENGINE

ENGINE REMOVAL

MUFFLER AND EXHAUST PIPE

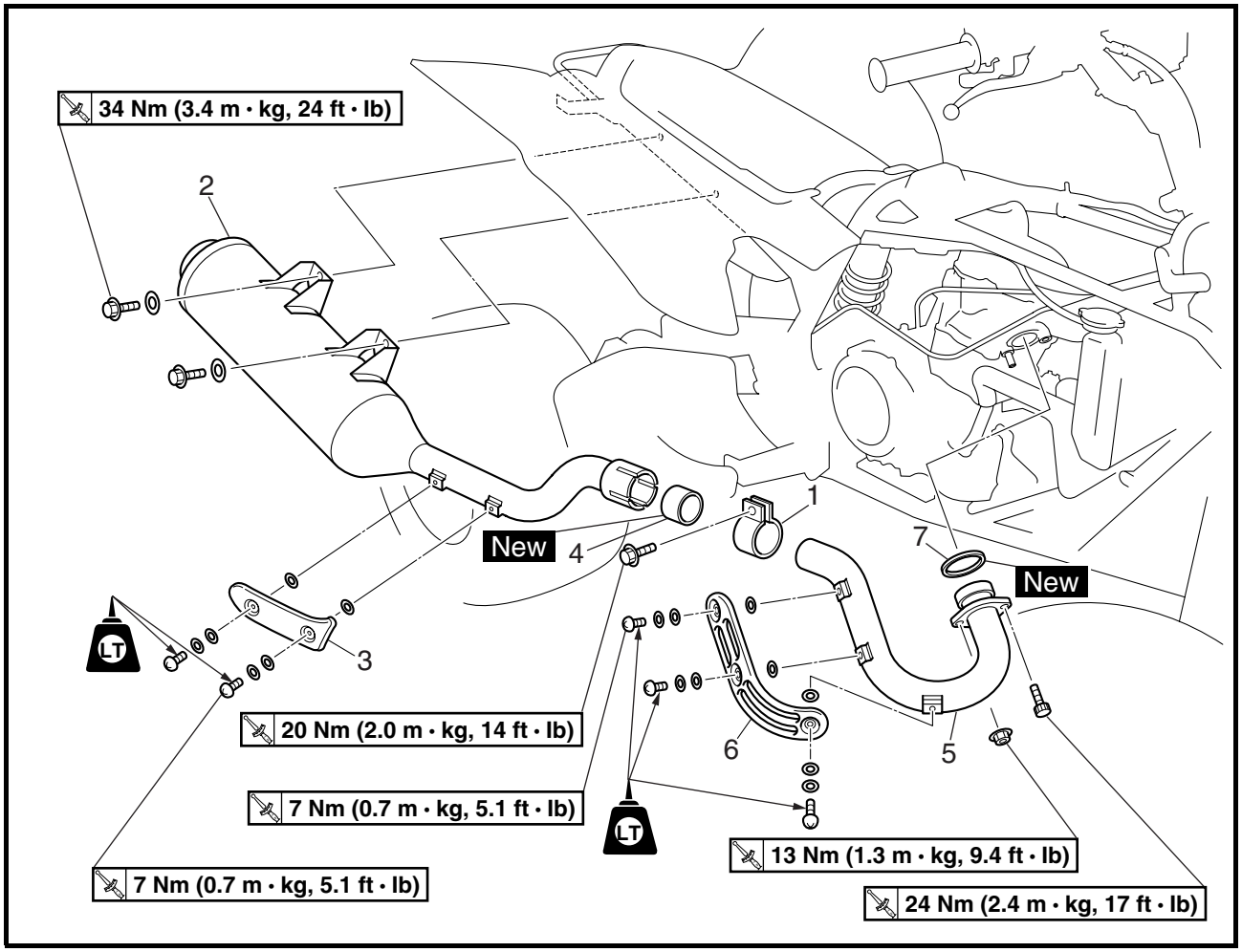

Order	Job/Part	Q'ty	Remarks
	Removing the muffler and exhaust pipe		Remove the parts in the order listed.
	Seat/fuel tank cover/side covers (left and right) Fuel tank Right foot protector/engine skid plate		Refer to "SEAT, FENDERS AND FUEL TANK" in chapter 3.
1	Clamp	1	Loosen.
2	Muffler	1	Refer to "INSTALLING THE EXHAUST PIPE AND MUFFLER".
3	Muffler protector	1	
4	Gasket	1	
5	Exhaust pipe	1	
6	Exhaust pipe protector	1	
7	Gasket	1	
			For installation, reverse the removal procedure.

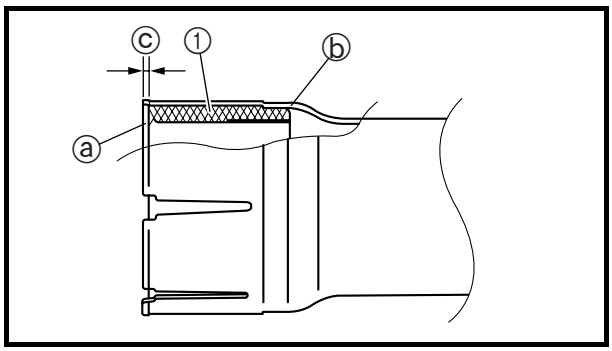

INSTALLING THE EXHAUST PIPE AND MUFFLER

1. Install:
   - gasket ① New
     (to muffler)

NOTE:
Install the gasket with the chamfer ⓐ, located on an inner rim of the gasket, and the chamfer ⓑ, located on an outer rim of the gasket, as shown.

	Installed depth of gasket ⓒ **1 ~ 1.5 mm (0.04 ~ 0.06 in)**

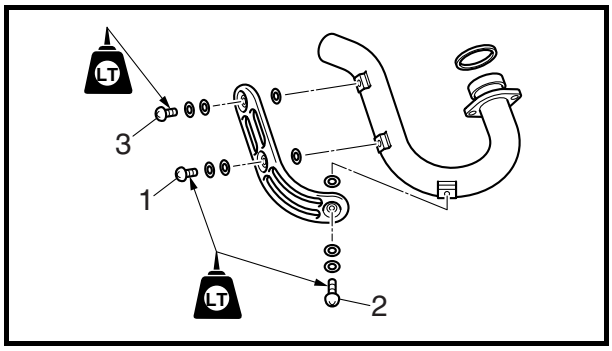

2. Install:
   - exhaust pipe protector
   - exhaust pipe protector screws

	Screw **7 Nm (0.7 m · kg, 5.1 ft · lb)** **LOCTITE®**

NOTE:
Tighten the screws to the specified torque in the proper tightening sequence as shown.

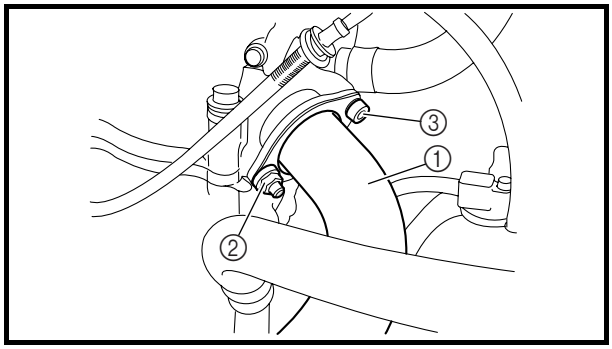

3. Install:
   - exhaust pipe ①
   - nut (exhaust pipe) ②

	13 Nm (1.3 m · kg, 9.4 ft · lb)

   - bolt (exhaust pipe) ③

	24 Nm (2.4 m · kg, 17 ft · lb)

NOTE:
First, temporarily tighten the nut (exhaust pipe), then tighten the bolt (exhaust pipe) 20 Nm (2.0 m · kg, 14 ft · lb). After that, retighten the nut (exhaust pipe) 13 Nm (1.3 m · kg, 9.4 ft · lb) and then the bolt (exhaust pipe) 24 Nm (2.4 m · kg, 17 ft · lb).

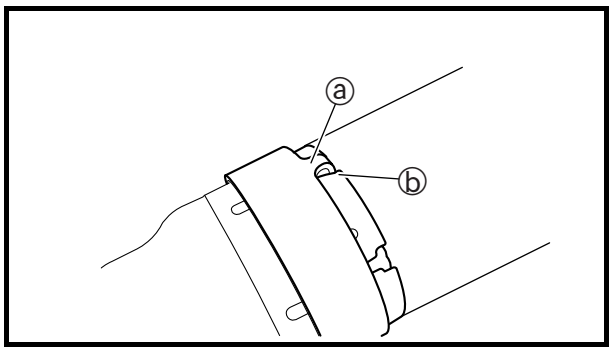

4. Install:
   - clamp

NOTE:
Slide the clamp onto the end of the muffler and insert the projection ⓐ of the clamp into a slot ⓑ in the muffler. Tighten the clamp after installing the muffler.

EBS00204
LEADS, CABLES AND HOSES

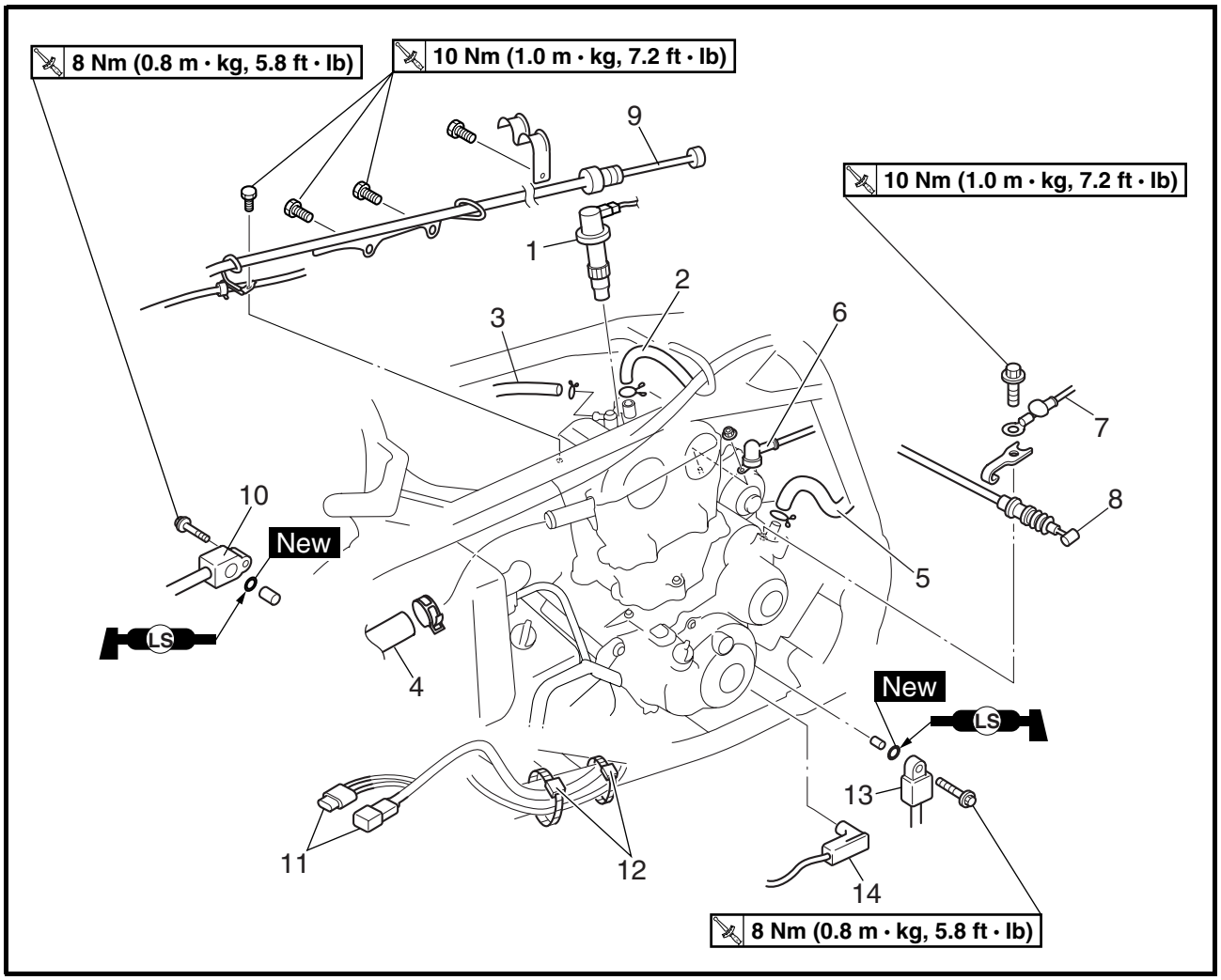

Order	Job/Part	Q'ty	Remarks
	Removing the leads, cables and hoses		Remove the parts in the order listed.
	Engine oil		Drain.
	Coolant		Drain.
	Radiator outlet hose/water pump inlet pipe		Refer to "WATER PUMP" in chapter 5.
	Carburetor		Refer to "CARBURETOR" in chapter 6.
	Drive sprocket/drive chain		Refer to "SWINGARM AND DRIVE CHAIN" in chapter 7.
1	Ignition coil	1	
2	Cylinder head breather hose	1	
3	Oil tank breather hose	1	
4	Radiator inlet hose	1	
5	Crankcase breather hose	1	

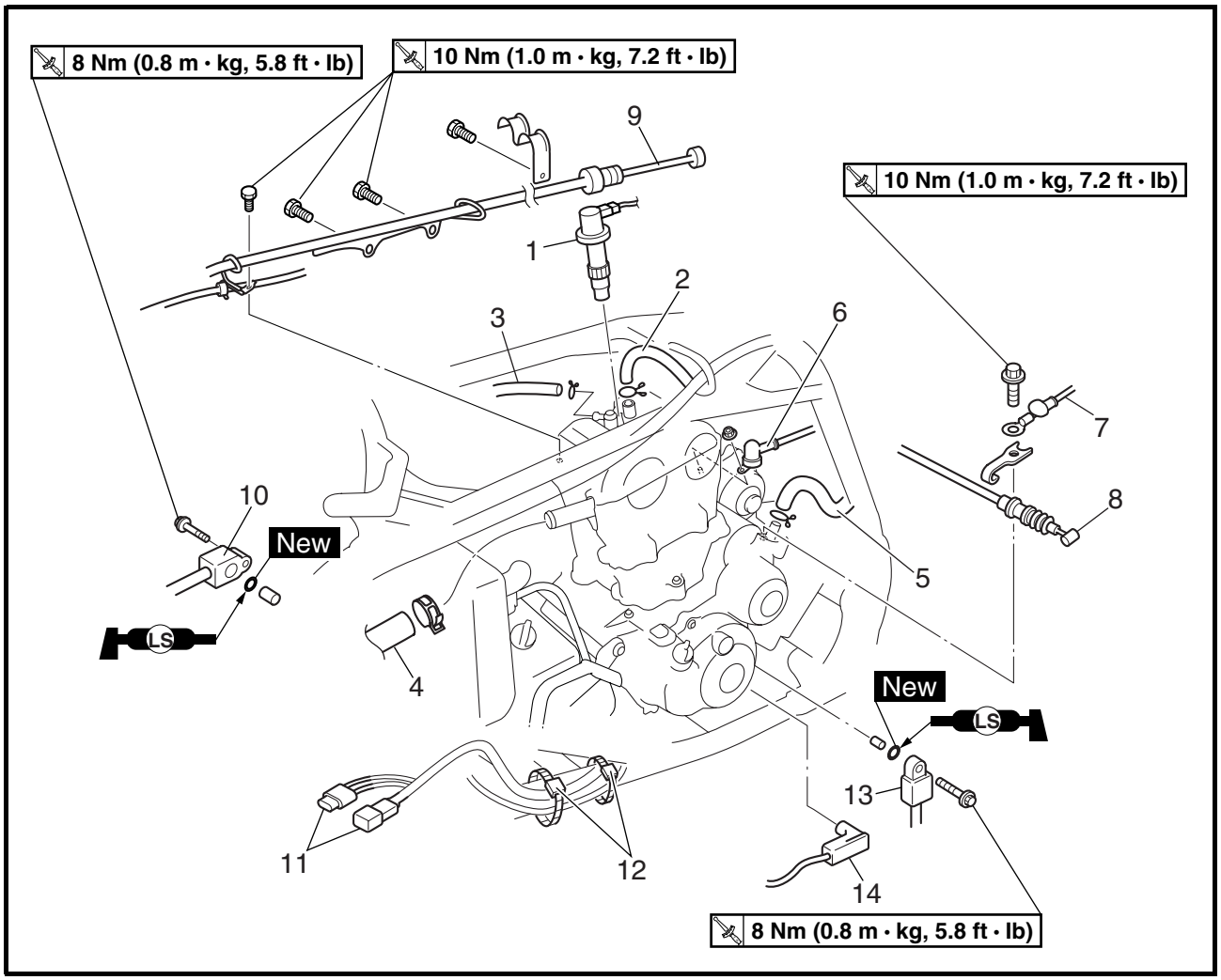

Order	Job/Part	Q'ty	Remarks
6	Starter motor lead	1	Disconnect.
7	Battery negative lead	1	Disconnect.
8	Clutch cable	1	
9	Parking brake cable	1	
10	Oil pipe 1	1	
11	A.C. magneto coupler	2	Disconnect.
12	Plastic band	2	
13	Oil pipe 2	1	
14	Neutral switch lead	1	Disconnect.
			For installation, reverse the removal procedure.

EBS00205

ENGINE MOUNTING BOLTS

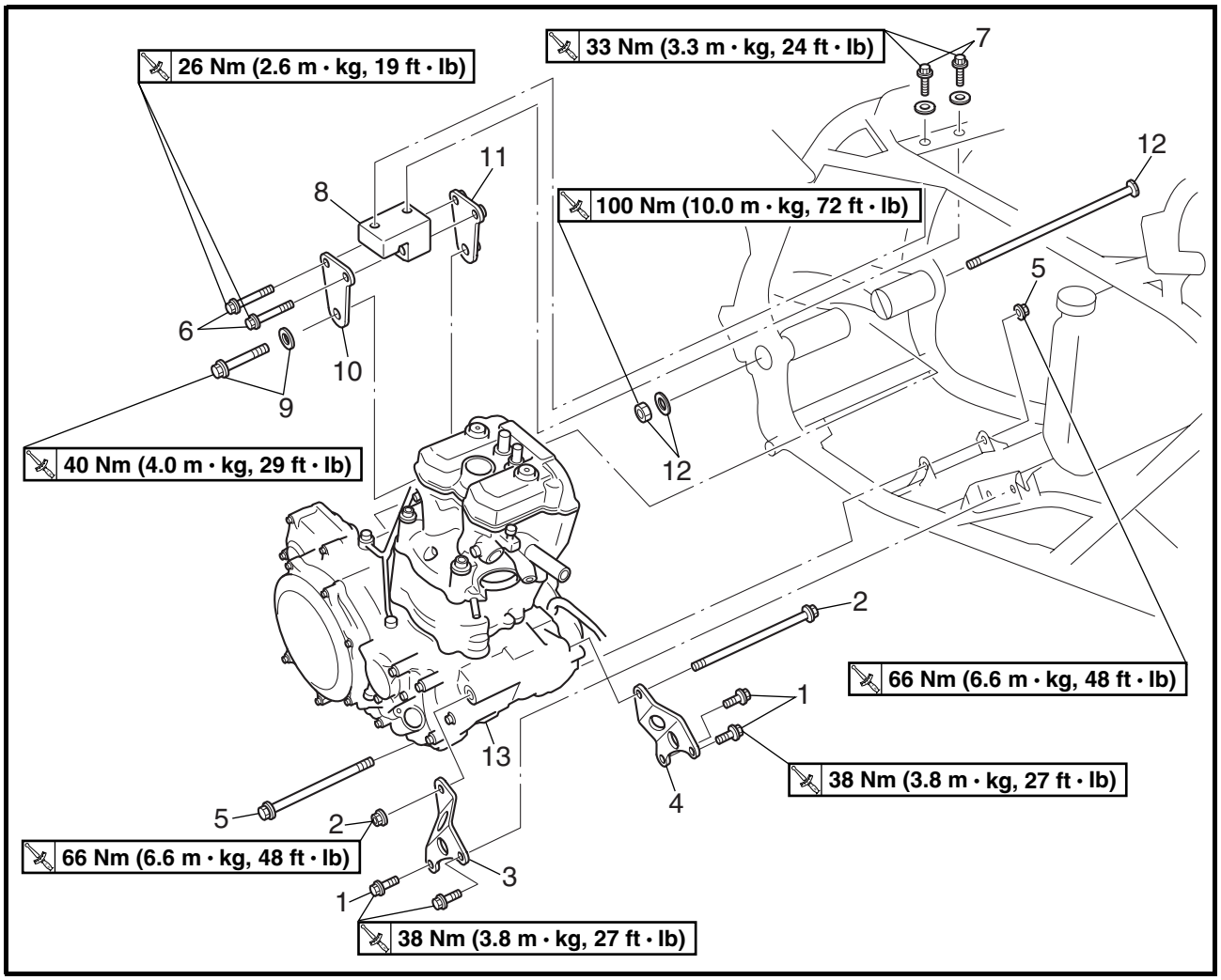

Order	Job/Part	Q'ty	Remarks
	Removing the engine mounting bolts		Remove the parts in the order listed.
1	Engine lower bracket bolt	4	
2	Engine mounting bolt (middle)/nut	1/1	
3	Engine lower bracket (right)	1	
4	Engine lower bracket (left)	1	
5	Engine mounting bolt (lower)/nut	1/1	**CAUTION:** **Install all of the bolts/nuts and then tighten them to full torque specifications.**
6	Engine upper bracket bolt	2	
7	Engine stay bolt/washer	2/2	
8	Engine stay	1	
9	Engine mounting bolt (upper)/washer	1/1	
10	Engine upper bracket (right)	1	
11	Engine upper bracket (left)	1	
12	Pivot shaft/nut/washer	1/1/1	

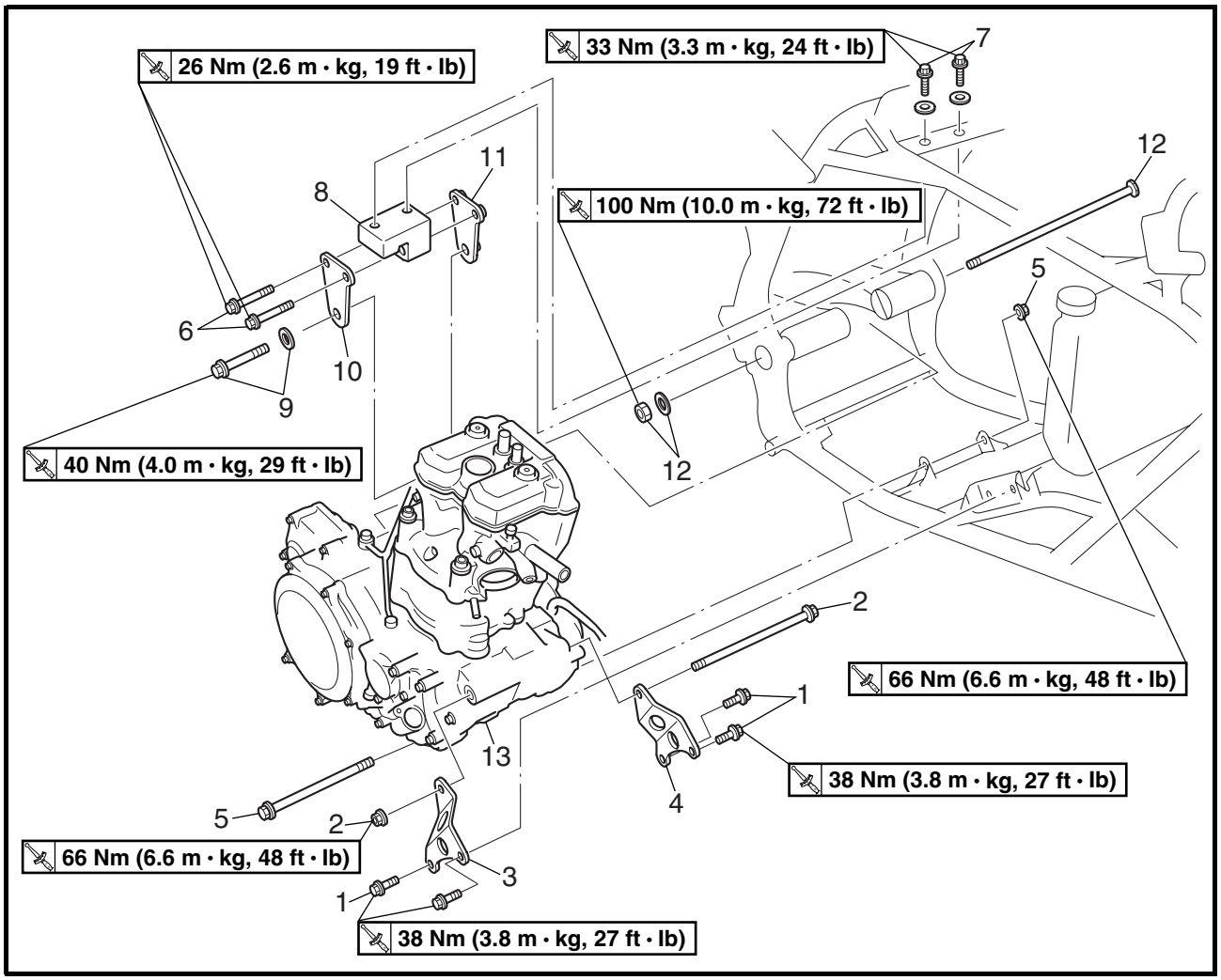

Order	Job/Part	Q'ty	Remarks
13	Engine assembly	1	**NOTE:** Remove the engine assembly from the right side of the machine. For installation, reverse the removal procedure.

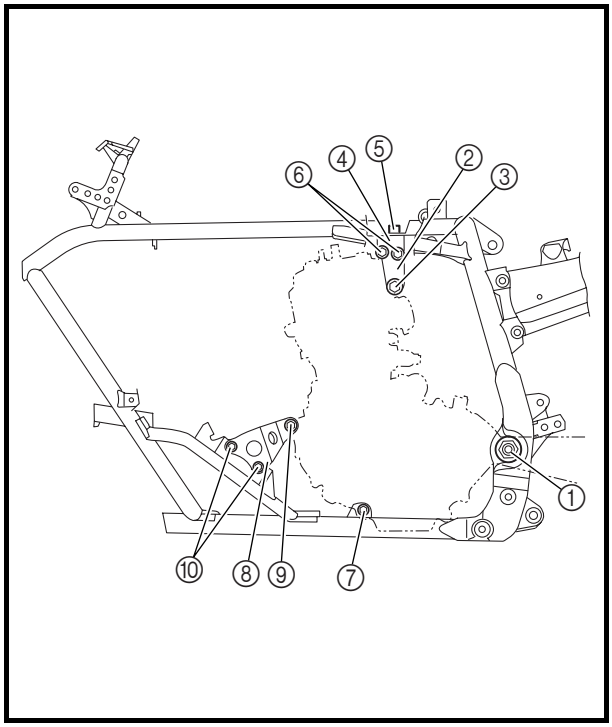

EBS00206

INSTALLING THE ENGINE

1. Install:
   - pivot shaft/nut/washer ①
   - engine upper bracket (left) ②
   - engine upper bracket (right)
   - engine mounting bolt (upper) ③
   - engine stay ④
   - engine stay bolts/washers ⑤
   - engine upper bracket bolts ⑥
   - engine mounting bolt (lower)/nut ⑦
   - engine lower bracket (left) ⑧
   - engine lower bracket (right)
   - engine mounting bolt (middle)/nut ⑨
   - engine lower bracket bolts ⑩

NOTE:
Do not fully tighten the bolts and nuts.

2. Tighten:
   - pivot shaft/nut ①
     100 Nm (10.0 m · kg, 72 ft · lb)
   - engine mounting bolt (upper) ③
     40 Nm (4.0 m · kg, 29 ft · lb)
   - engine stay bolts ⑤
     33 Nm (3.3 m · kg, 24 ft · lb)
   - engine upper bracket bolts ⑥
     26 Nm (2.6 m · kg, 19 ft · lb)
   - engine mounting bolt (lower)/nut ⑦
     66 Nm (6.6 m · kg, 48 ft · lb)
   - engine mounting bolt (middle)/nut ⑨
     66 Nm (6.6 m · kg, 48 ft · lb)
   - engine lower bracket bolts ⑩
     38 Nm (3.8 m · kg, 27 ft · lb)

EBS00208

CAMSHAFTS

CYLINDER HEAD COVER

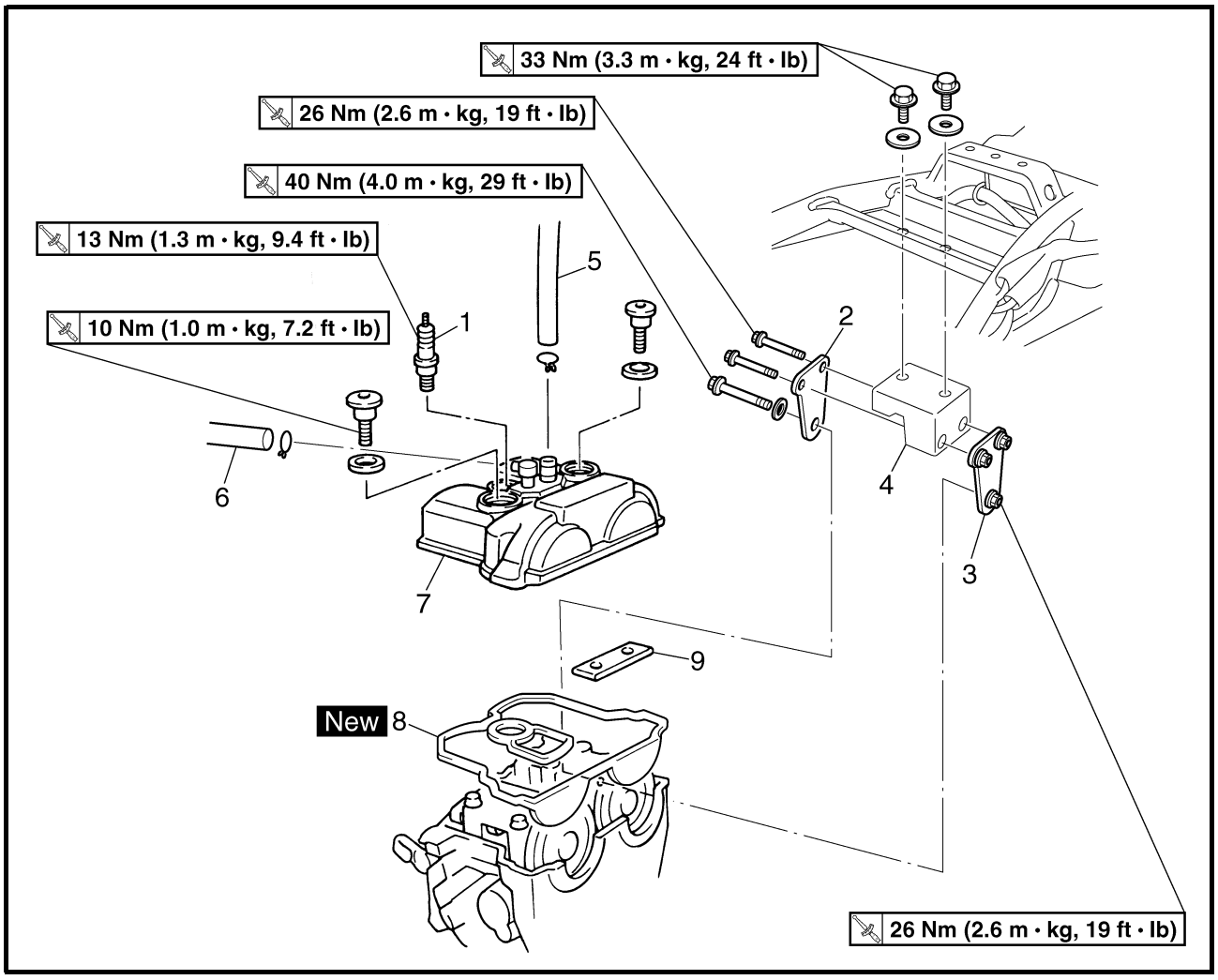

Order	Job/Part	Q'ty	Remarks
	Removing the cylinder head cover		Remove the parts in the order listed.
	Seat/fuel tank cover/side covers (left and right)		Refer to "SEAT, FENDERS AND FUEL TANK" in chapter 3.
1	Spark plug	1	
2	Engine upper bracket (right)	1	
3	Engine upper bracket (left)	1	
4	Engine stay	1	
5	Cylinder head breather hose	1	
6	Oil tank breather hose	1	
7	Cylinder head cover	1	
8	Cylinder head cover gasket	1	
9	Timing chain guide (top side)	1	
			For installation, reverse the removal procedure.

CAMSHAFTS

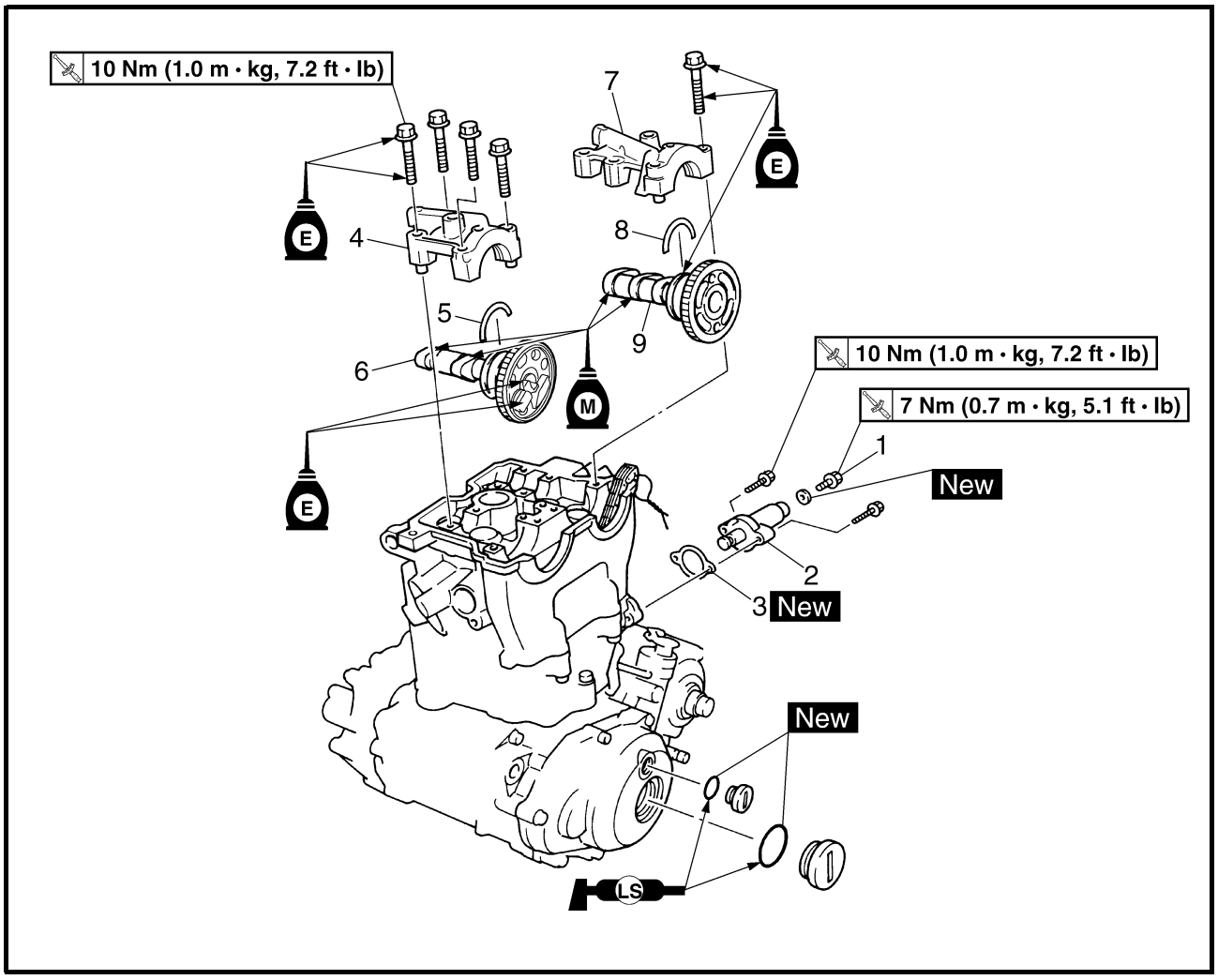

Order	Job/Part	Q'ty	Remarks
	Removing the camshafts		Remove the parts in the order listed.
1	Tensioner cap bolt	1	Refer to "REMOVING THE CAMSHAFTS" and "INSTALLING THE CAMSHAFTS".
2	Timing chain tensioner	1	
3	Gasket	1	
4	Exhaust camshaft cap	1	
5	Clip	1	
6	Exhaust camshaft	1	
7	Intake camshaft cap	1	
8	Clip	1	
9	Intake camshaft	1	
			For installation, reverse the removal procedure.

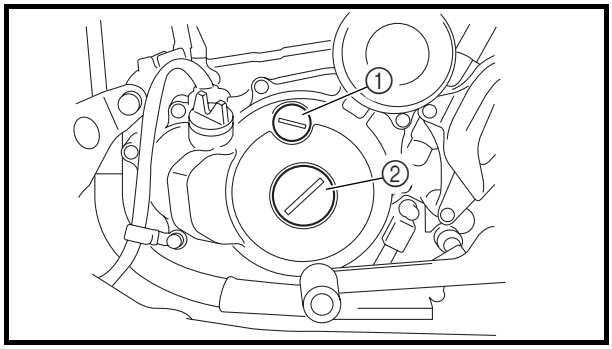

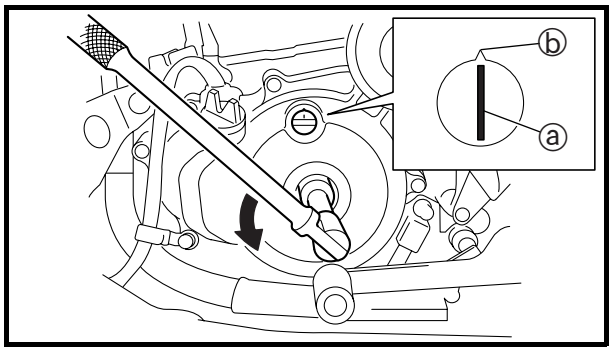

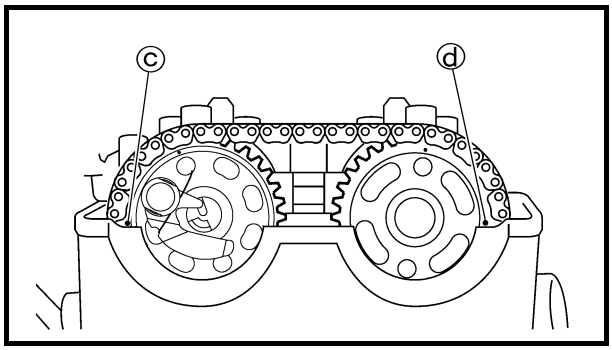

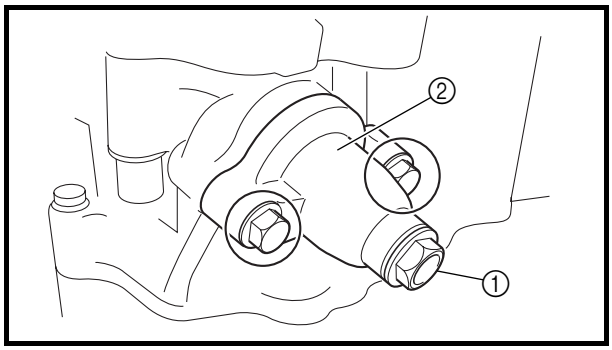

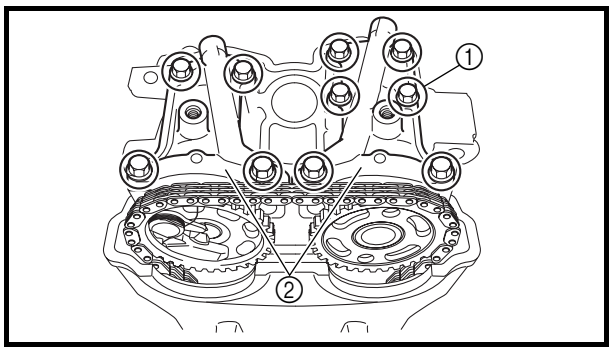

REMOVING THE CAMSHAFTS

1. Remove:
   - timing mark accessing screw ①
   - crankshaft end accessing screw ②
2. Align:
   - "I" mark on the A.C. magneto rotor (with stationary pointer on the A.C. magneto cover)

▼▼▼▼▼▼▼▼▼▼▼▼▼▼▼▼▼▼▼▼▼▼▼▼▼▼▼▼▼▼▼▼▼▼

a. Turn the crankshaft counterclockwise.
b. When the piston is at the Top Dead Center (TDC) on the compression stroke, align the "I" mark ⓐ on the A.C. magneto rotor with the stationary pointer ⓑ on the A.C. magneto cover.

NOTE:

- In order to be sure that the piston is at the Top Dead Center (TDC), the punch mark ⓒ on the exhaust camshaft sprocket and the punch mark ⓓ on the intake camshaft sprocket must align with the cylinder head mating surface, as shown in the illustration.
- The Top Dead Center (TDC) on the compression stroke can be found when the camshaft lobes are turned away from each other.

▲▲▲▲▲▲▲▲▲▲▲▲▲▲▲▲▲▲▲▲▲▲▲▲▲▲▲▲▲▲▲▲▲▲

3. Loosen:
   - tensioner cap bolt ①
4. Remove:
   - timing chain tensioner ②

5. Remove:
   - camshaft cap bolts ①
   - camshaft caps ②

NOTE:

Remove the camshaft cap bolts in a crisscross pattern, working from the outside in.

CAUTION:

To prevent damage to the cylinder head, camshafts or camshaft caps, loosen the camshaft cap bolts in stages and in a crisscross pattern, working from the outside in.

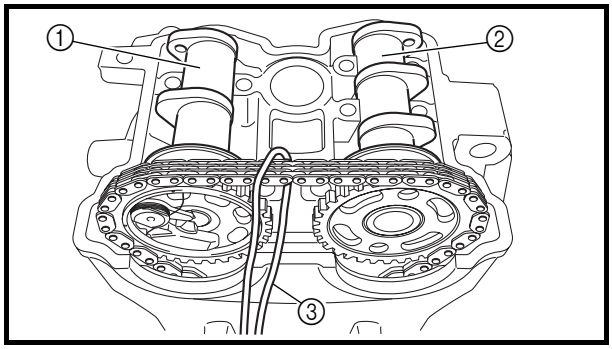

6. Remove:
   - exhaust camshaft ①
   - intake camshaft ②
   - clips

NOTE:
To prevent the timing chain from falling into the crankcase, fasten it with a wire ③.

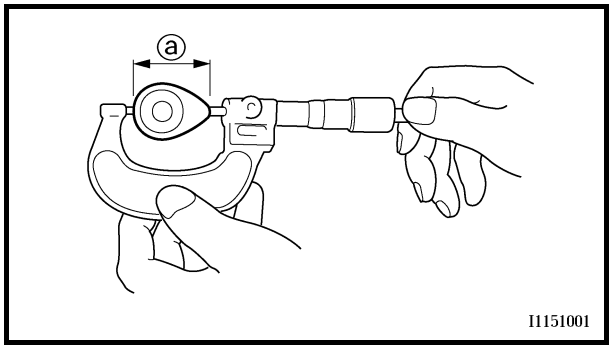

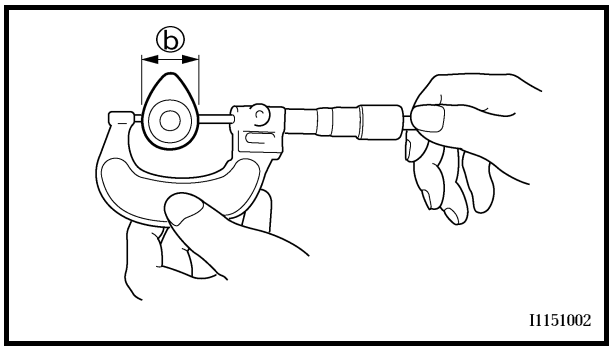

CHECKING THE CAMSHAFTS

1. Check:
- camshaft lobes
  Pitting/scratches/blue discoloration → Replace the camshaft.

2. Measure:
- camshaft lobe dimensions ⓐ and ⓑ
  Out of specification → Replace the camshaft.

Camshaft lobe dimensions
Intake
ⓐ **31.200 ~ 31.300 mm (1.2283 ~ 1.2323 in)**
<Limit>: 31.100 mm (1.2244 in)
ⓑ **22.550 ~ 22.650 mm (0.8878 ~ 0.8917 in)**
<Limit>: 22.450 mm (0.8839 in)
Exhaust
ⓐ **30.950 ~ 31.050 mm (1.2185 ~ 1.2224 in)**
<Limit>: 30.850 mm (1.2146 in)
ⓑ **22.494 ~ 22.594 mm (0.8856 ~ 0.8895 in)**
<Limit>: 22.394 mm (0.8817 in)

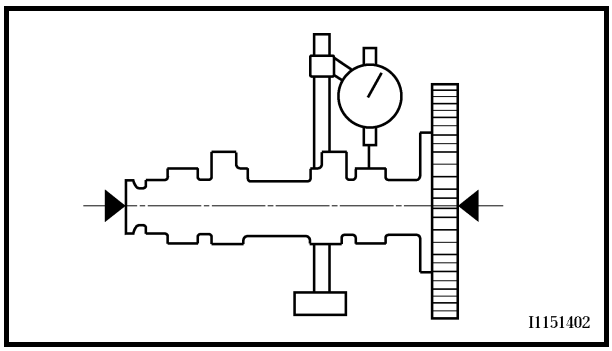

3. Measure:
- camshaft runout
  Out of specification → Replace.

Camshaft runout limit
0.03 mm (0.0012 in)

4. Measure:
  - camshaft-journal-to-camshaft-cap clearance
    Out of specification → Measure the camshaft journal diameter.

Camshaft-journal-to-camshaft-cap clearance
0.020 ~ 0.054 mm
(0.0008 ~ 0.0021 in)
<Limit>: 0.080 mm (0.0032 in)

▼▼▼▼▼▼▼▼▼▼▼▼▼▼▼▼▼▼▼▼▼▼▼▼▼▼▼▼▼▼▼▼▼

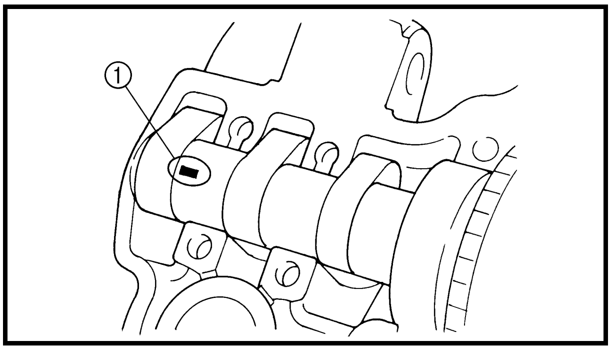

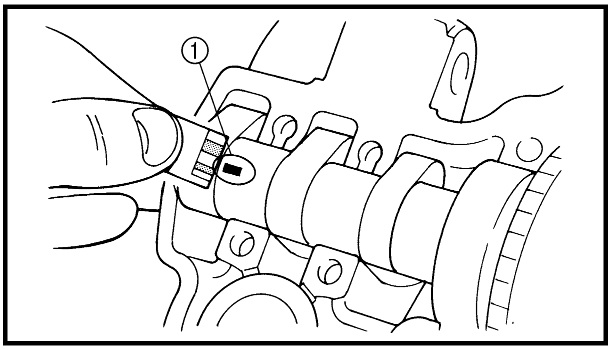

a. Install the camshaft into the cylinder head (without the camshaft caps).
b. Position a strip of Plastigauge® ① onto the camshaft journal as shown.
c. Install the circlip and camshaft caps.

NOTE:
- Tighten the camshaft cap bolts in stages and in a crisscross pattern, working from the inner caps out.
- Do not turn the camshaft when measuring the camshaft-journal-to-camshaft-cap clearance with the Plastigauge®.

Camshaft cap bolt
10 Nm (1.0 m · kg, 7.2 ft · lb)

d. Remove the camshaft caps and then measure the width of the Plastigauge® ①.

▲▲▲▲▲▲▲▲▲▲▲▲▲▲▲▲▲▲▲▲▲▲▲▲▲▲▲▲▲▲▲▲▲

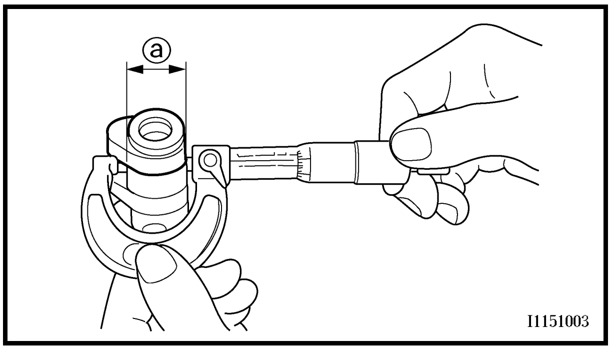

5. Measure:
  - camshaft journal diameter ⓐ
    Out of specification → Replace the camshaft.
    Within specification → Replace the cylinder head and camshaft caps as a set.

Camshaft journal diameter
21.967 ~ 21.980 mm
(0.8648 ~ 0.8654 in)

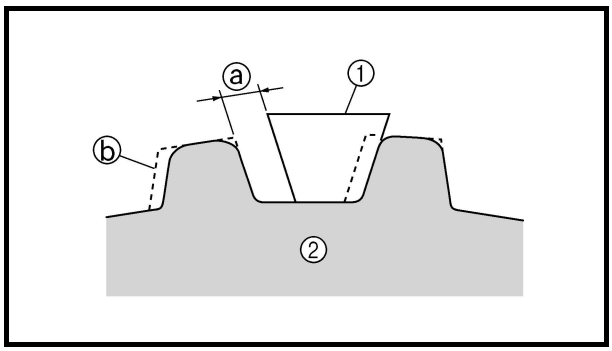

EBS00224

CHECKING THE CAMSHAFT SPROCKETS

1. Check:
   - camshaft sprockets
     Wear/damage → Replace the camshaft sprockets and timing chain as a set.

ⓐ 1/4 of a tooth
ⓑ Correct
① Roller
② Sprocket

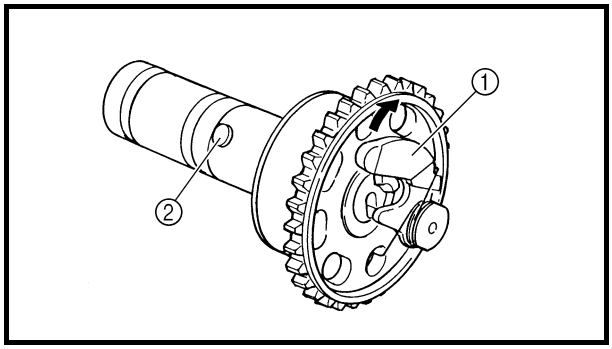

EBS00225

CHECKING THE DECOMPRESSION SYSTEM

1. Check:
   - decompression system

▼▼▼▼▼▼▼▼▼▼▼▼▼▼▼▼▼▼▼▼▼▼▼▼▼▼▼▼▼▼▼▼▼▼

a. Check that the decompressor lever pin ① projects from the camshaft.
b. Check that the decompressor cam ② moves smoothly.

▲▲▲▲▲▲▲▲▲▲▲▲▲▲▲▲▲▲▲▲▲▲▲▲▲▲▲▲▲▲▲▲▲▲

EBS00226

CHECKING THE TIMING CHAIN GUIDE

1. Check:
   - timing chain guide (top side)
     Wear/damage → Replace.

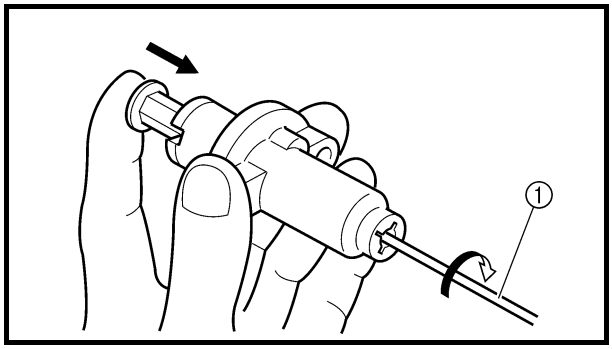

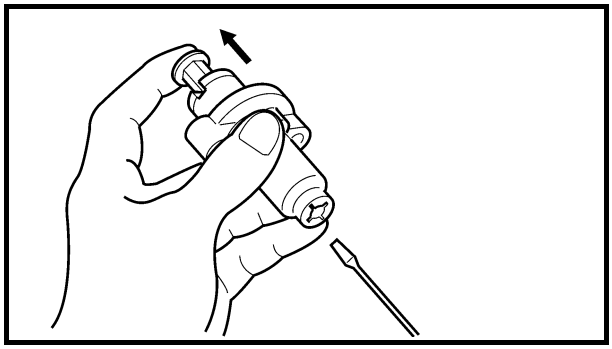

EBS00228

CHECKING THE TIMING CHAIN TENSIONER

1. Check:
   - chain tensioner rod
     Damage/wear → Replace.
2. Check:
   - timing chain tensioner play

▼▼▼▼▼▼▼▼▼▼▼▼▼▼▼▼▼▼▼▼▼▼▼▼▼▼▼▼▼▼▼▼▼▼

a. While pressing the tensioner rod lightly with fingers, use a thin screwdriver ① and wind the tensioner rod up fully clockwise.
b. When releasing the screwdriver by pressing lightly with fingers, make sure that the tensioner rod will come out smoothly.
c. If not, replace the tensioner assembly.

▲▲▲▲▲▲▲▲▲▲▲▲▲▲▲▲▲▲▲▲▲▲▲▲▲▲▲▲▲▲▲▲▲▲

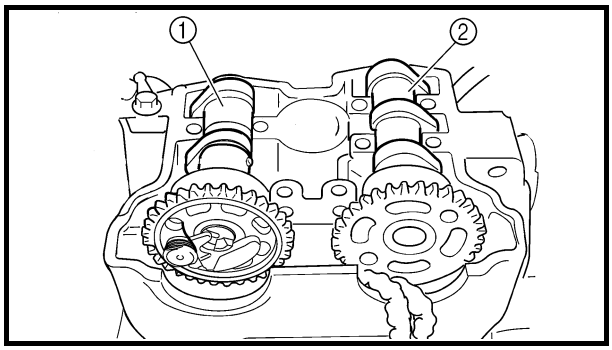

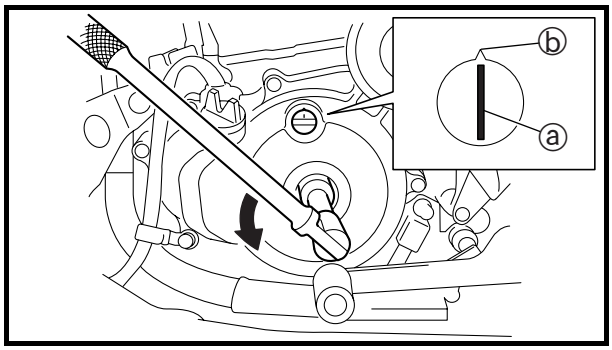

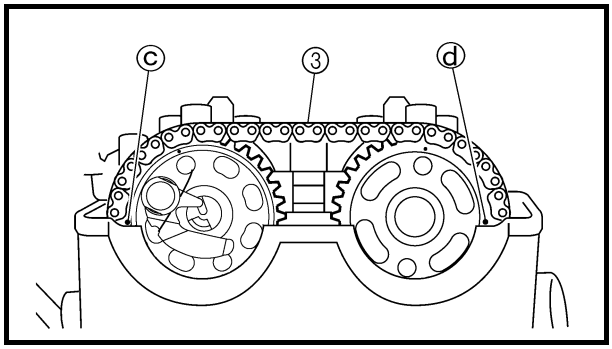

INSTALLING THE CAMSHAFTS

1. Install:
   - exhaust camshaft ①
   - intake camshaft ②

▼▼▼▼▼▼▼▼▼▼▼▼▼▼▼▼▼▼▼▼▼▼▼▼▼▼▼▼▼▼▼▼▼▼

a. Turn the crankshaft counterclockwise until the “I” mark ⓐ on the rotor is aligned with the stationary pointer ⓑ on the A.C. magneto cover.
b. Fit the timing chain ③ onto both camshaft sprockets and install the camshafts on the cylinder head.

NOTE:

The camshafts should be installed onto the cylinder head so that the exhaust camshaft sprocket punch mark ⓒ and the intake camshaft sprocket punch mark ⓓ align with the mating surface of the cylinder head.

CAUTION:

Do not turn the crankshaft during the camshaft installation. Damage or improper valve timing will result.

▲▲▲▲▲▲▲▲▲▲▲▲▲▲▲▲▲▲▲▲▲▲▲▲▲▲▲▲▲▲▲▲▲▲

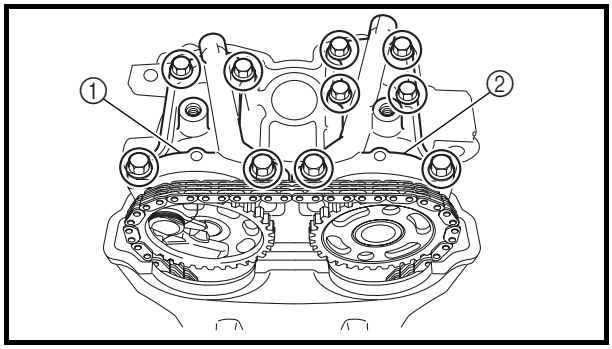

2. Install:
   - clips
   - intake camshaft cap ①
   - exhaust camshaft cap ②
   - camshaft cap bolts

10 Nm (1.0 m · kg, 7.2 ft · lb)

NOTE:
Tighten the camshaft cap bolts in stages and in a crisscross pattern, working from the inner caps out.

CAUTION:

The camshaft cap bolts must be tightened evenly or damage to the cylinder head, camshaft caps, and camshafts will result.

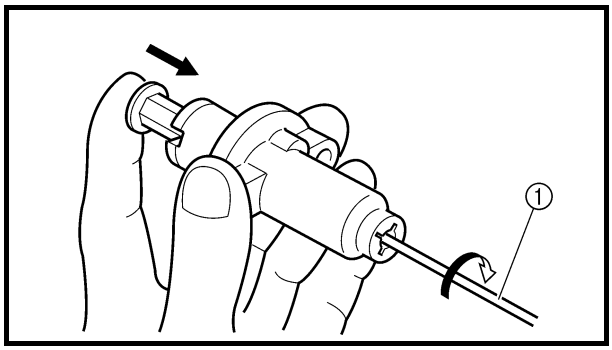

3. Install:
   - timing chain tensioner

▼▼▼▼▼▼▼▼▼▼▼▼▼▼▼▼▼▼▼▼▼▼▼▼▼▼▼▼▼▼▼▼▼▼▼

a. While lightly pressing the timing chain tensioner rod by hand, turn the tensioner rod fully clockwise with a thin screwdriver ①.
b. With the timing chain tensioner rod turned all the way into the timing chain tensioner housing (with the thin screwdriver still installed), install the gasket and the timing chain tensioner ② onto the cylinder block.

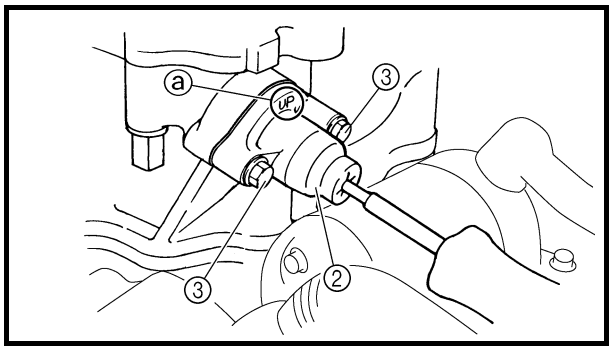

NOTE:
The "UP" mark ⓐ on the timing chain tensioner should face UP.

⚠ WARNING

Always use a new gasket.

c. Tighten the timing chain tensioner bolts ③ to the specified torque.

	Timing chain tensioner bolt **10 Nm (1.0 m · kg, 7.2 ft · lb)**

d. Remove the screwdriver, mark sure that the timing chain tensioner rod releases, and then tighten the cap bolt to the specified torque.

	Tensioner cap bolt **7 Nm (0.7 m · kg, 5.1 ft · lb)**

▲▲▲▲▲▲▲▲▲▲▲▲▲▲▲▲▲▲▲▲▲▲▲▲▲▲▲▲▲▲▲▲▲▲

4. Turn:
   - crankshaft
     (counterclockwise several turns)
5. Check:
   - A.C. magneto rotor “I” mark
     Align with the A.C. magneto cover stationary pointer.
   - camshaft sprocket punch marks
     Align with the cylinder head mating surface.
     Out of alignment → Adjust.
     Refer to “INSTALLING THE CAMSHAFTS”.
6. Measure:
   - valve clearance
     Out of specification → Adjust.
     Refer to “ADJUSTING THE VALVE CLEARANCE” in chapter 3.

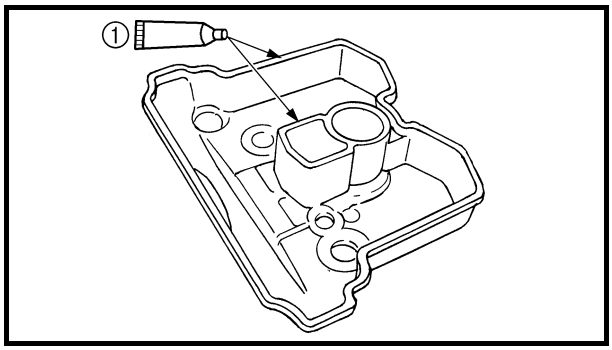

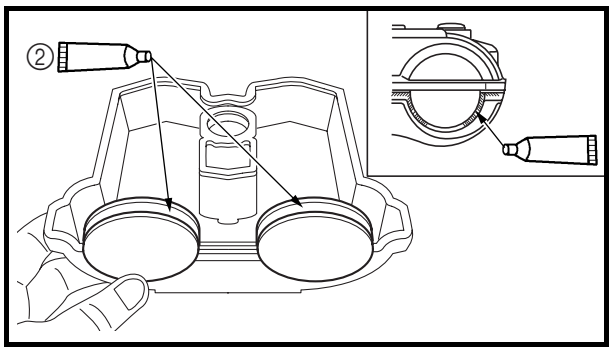

7. Install:
   - timing chain guide (top side)
   - cylinder head cover gasket New
   - cylinder head cover

	10 Nm (1.0 m · kg, 7.2 ft · lb)

NOTE:
- Apply Sealant (Quick Gasket®) or Yamaha bond No. 1215 ① onto the mating surfaces of the cylinder head cover and cylinder head cover gasket.
- Apply Sealant (Quick Gasket®) or Yamaha bond No. 1215 ② onto the mating surfaces of the cylinder head cover gasket and cylinder head.

CYLINDER HEAD

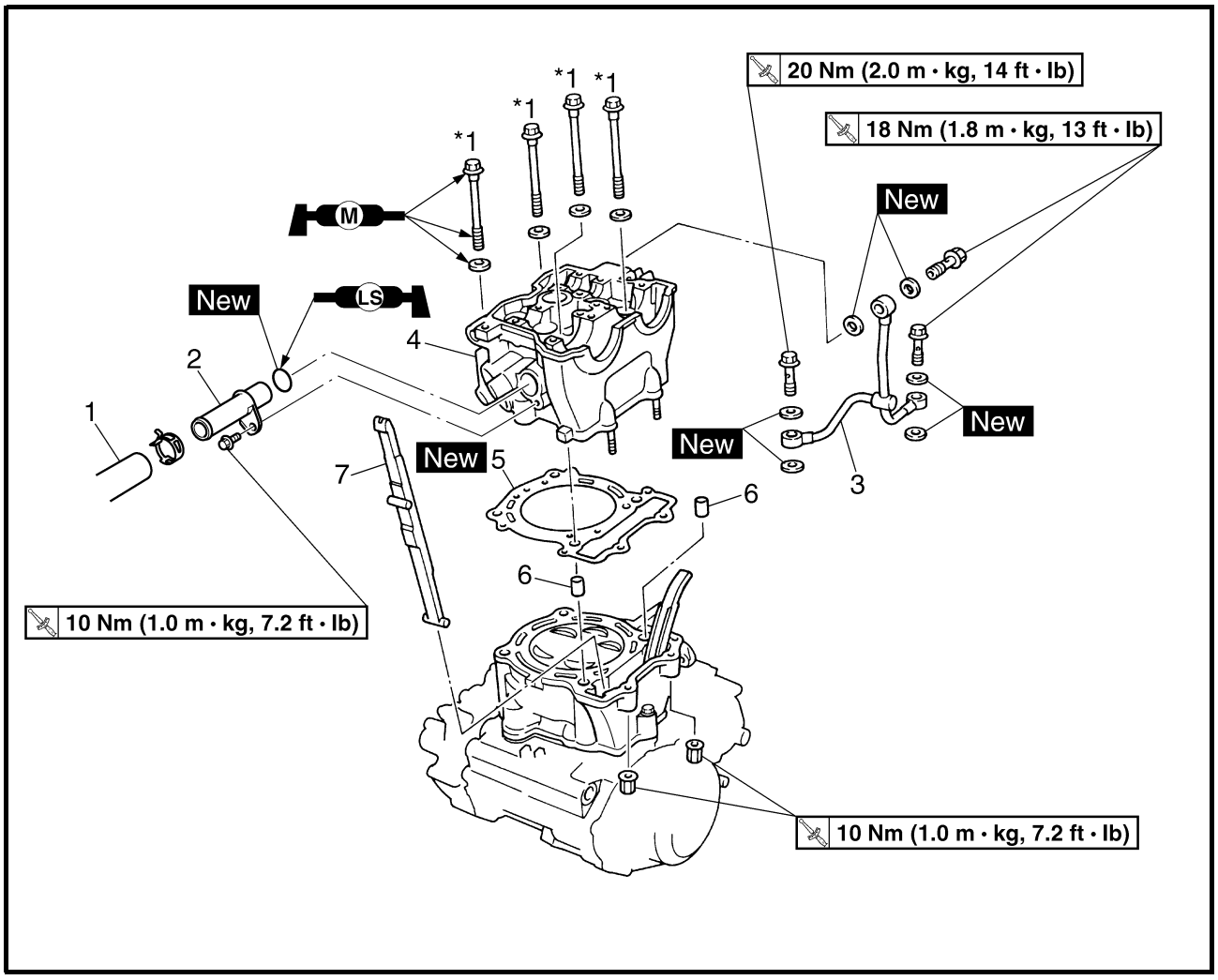

Order	Job/Part	Q'ty	Remarks
	Removing the cylinder head		Remove the parts in the order listed.
	Seat/fuel tank cover/side covers (left and right)/fuel tank		Refer to "SEAT, FENDERS AND FUEL TANK" in chapter 3.
	Muffler and exhaust pipe		Refer to "MUFFLER AND EXHAUST PIPE".
	Radiator inlet hose/parking brake and clutch cable holder		Refer to "LEADS, CABLES AND HOSES".
	Parking brake holder		
	Carburetor		Refer to "CARBURETOR" in chapter 6.
	Camshafts		Refer to "CAMSHAFTS".
1	Radiator inlet hose	1	
2	Cylinder head water jacket	1	
3	Oil delivery pipe 1	1	Refer to "INSTALLING THE CYLINDER HEAD".

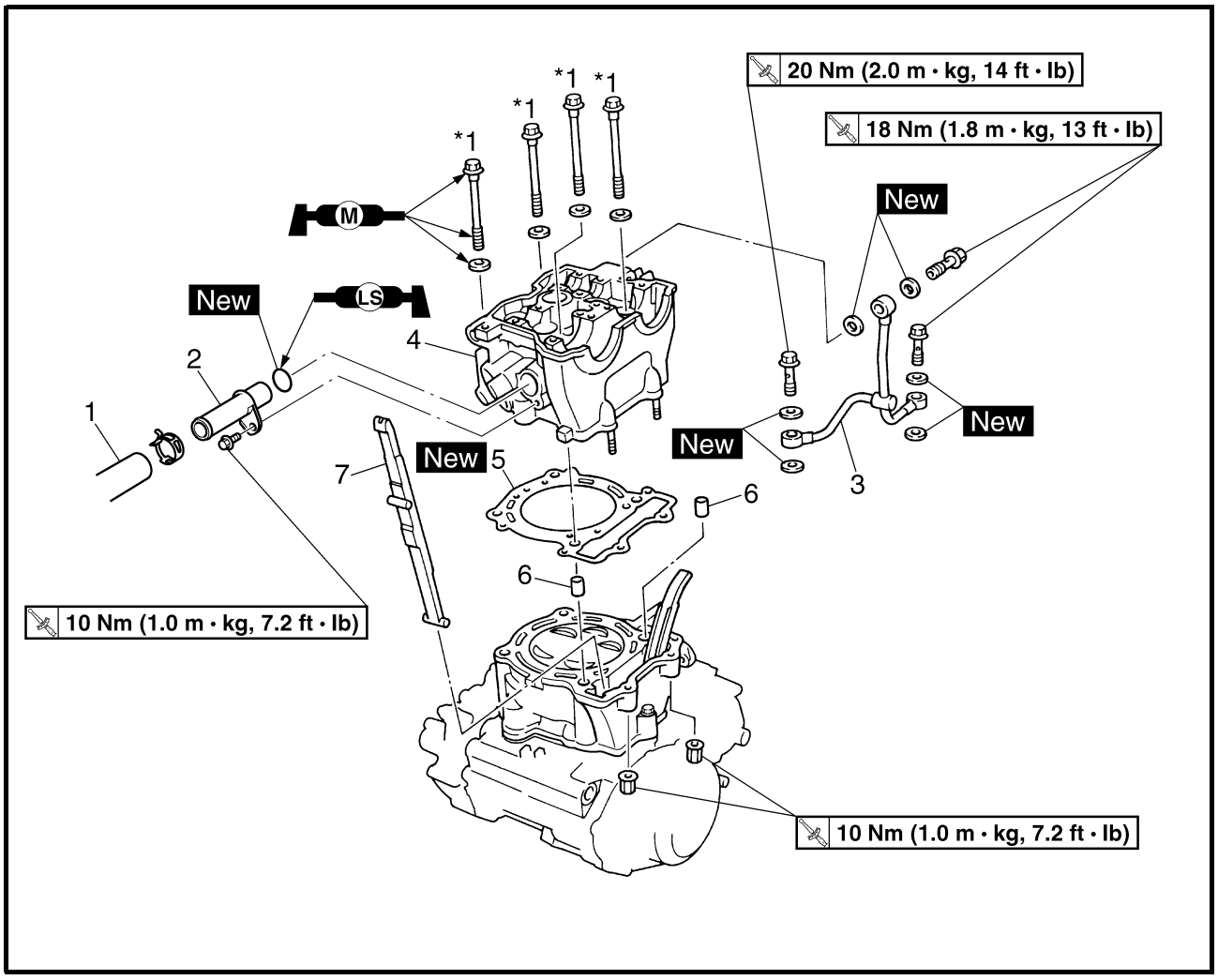

Order	Job/Part	Q'ty	Remarks
4	Cylinder head	1	Refer to "REMOVING THE CYLINDER HEAD" and "INSTALLING THE CYLINDER HEAD".
5	Cylinder head gasket	1	
6	Dowel pin	2	
7	Timing chain guide (exhaust side)	1	
			For installation, reverse the removal procedure.

NOTE:

*1: Tighten the cylinder head bolts to 30 Nm (3.0 m · kg, 22 ft · lb) in the proper tightening sequence, remove and retighten the cylinder head bolts to 20 Nm (2.0 m · kg, 14 ft · lb) in the proper tightening sequence, and then tighten the cylinder head bolts further in two steps of 90° to reach the specified angle of 180° in the proper tightening sequence.

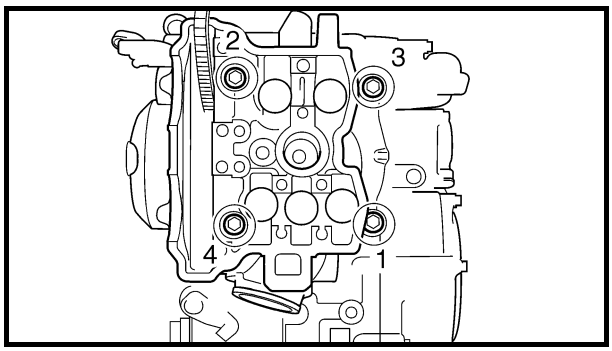

REMOVING THE CYLINDER HEAD

1. Remove:
   - cylinder head

NOTE:

- Loosen the bolts in the proper sequence.
- Follow the numerical order shown in the illustration. Loosen each bolt 1/4 of a turn at a time until all of the bolts are loose.

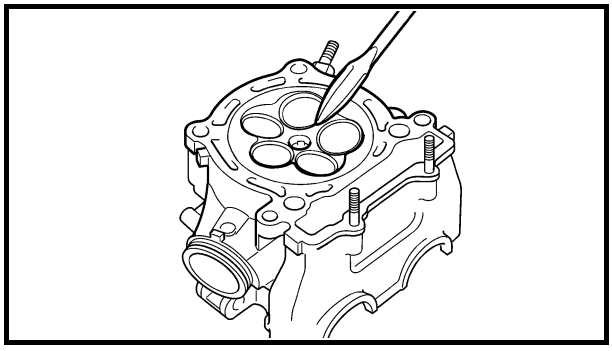

EBS00230

CHECKING THE CYLINDER HEAD

1. Eliminate:
   - combustion chamber carbon deposits (with a rounded scraper)

NOTE:

Do not use a sharp instrument to avoid damaging or scratching:

- spark plug bore threads
- valve seats

2. Check:
   - cylinder head
     Damage/scratches → Replace.
   - cylinder head water jacket
     Mineral deposits/rust → Eliminate.

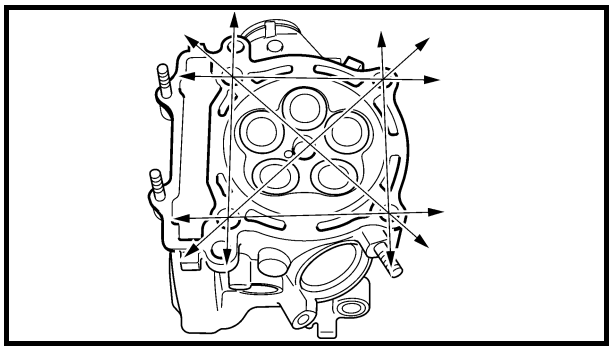

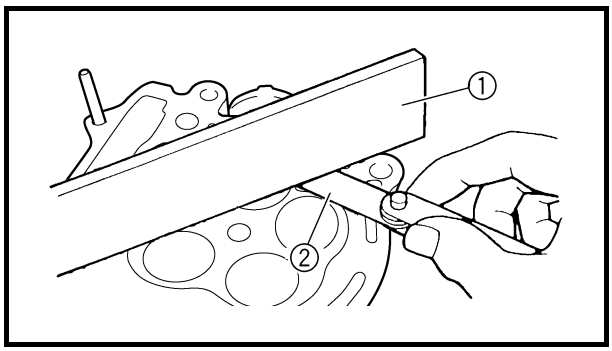

3. Measure:
   - cylinder head warpage
     Out of specification → Resurface the cylinder head.

	Maximum cylinder head warpage 0.05 mm (0.002 in)

▼▼▼▼▼▼▼▼▼▼▼▼▼▼▼▼▼▼▼▼▼▼▼▼▼▼▼▼▼▼▼▼▼▼▼▼▼▼

a. Place a straightedge ① and a thickness gauge ② across the cylinder head.
b. Measure the warpage.
c. If the limit is exceeded, resurface the cylinder head as follows.
d. Place a 400 ~ 600 grit wet sandpaper on the surface plate and resurface the cylinder head using a figure-eight sanding pattern.

NOTE:
To ensure an even surface, rotate the cylinder head several times.

▲▲▲▲▲▲▲▲▲▲▲▲▲▲▲▲▲▲▲▲▲▲▲▲▲▲▲▲▲▲▲▲▲▲

CHECKING THE OIL DELIVERY PIPE

1. Check:
   - oil delivery pipe 1
     Cracks/damage → Replace.
     Clogged → Blow out with compressed air.

CHECKING THE TIMING CHAIN GUIDE

1. Check:
   - timing chain guide (exhaust side)
     Wear/damage → Replace.

INSTALLING THE CYLINDER HEAD

1. Install:
   - timing chain guide (exhaust side)
   - gasket New
   - dowel pins
2. Install:
   - cylinder head

NOTE:
Pass the timing chain through the timing chain cavity.

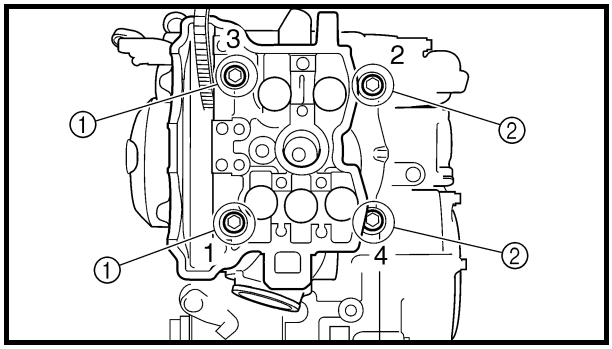

3. Install:
   - washers
   - bolts ①: ℓ = 159 mm (6.26 in)
   - bolts ②: ℓ = 149 mm (5.87 in)

▼▼▼▼▼▼▼▼▼▼▼▼▼▼▼▼▼▼▼▼▼▼▼▼▼▼▼▼▼▼▼▼▼

NOTE:

Tighten the bolts to the specified torque in two or three steps in the proper tightening sequence as shown.

---

a. Wash the threads and contact surfaces of the bolts, the contact surfaces of the washers, the contact surface of the cylinder head, and the threads of the crankcase.
b. Apply molybdenum disulfide grease on the threads and contact surfaces of the bolts and on both contact surfaces of the washers.
c. Install the washers and bolts.
d. Tighten the bolts to the specified torque in two or three steps in the proper tightening sequence as shown.

Cylinder head bolts
1st
30 Nm (3.0 m · kg, 22 ft · lb)

e. Remove the bolts.
f. Again apply molybdenum disulfide grease on the threads and contact surfaces of the bolts and on both contact surfaces of the washers.
g. Retighten the bolts.

Cylinder head bolts
2nd
20 Nm (2.0 m · kg, 14 ft · lb)

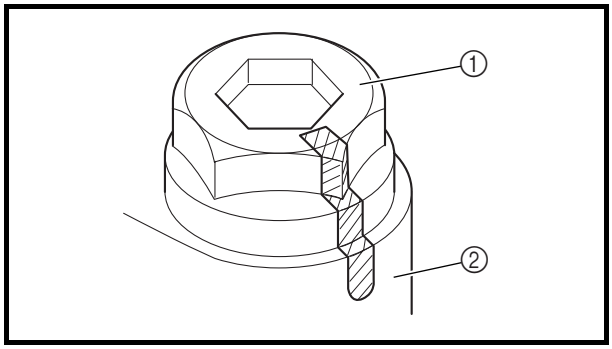

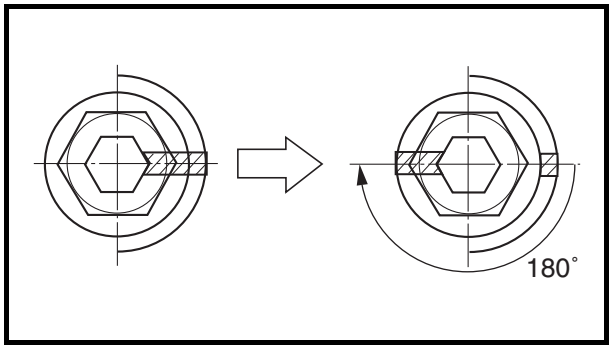

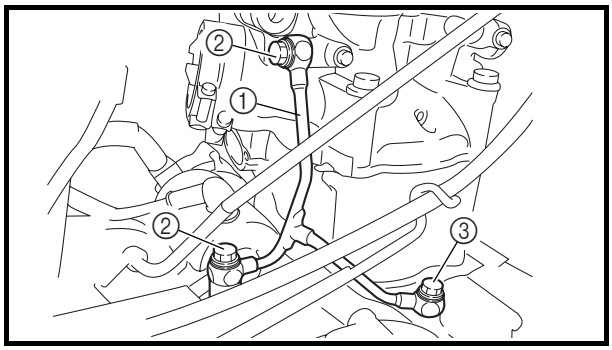

h. Put a mark on the corner ① of the cylinder head bolt and the cylinder head ② as shown.

NOTE:
Tighten the bolts 90° in each of the two steps to reach the specified angle of 180° in the proper tightening sequence as shown.

Cylinder head bolts
Final
Specified angle 180°

▲▲▲▲▲▲▲▲▲▲▲▲▲▲▲▲▲▲▲▲▲▲▲▲▲▲▲▲▲▲▲▲▲▲

4. Install:
   - cylinder head nuts

10 Nm (1.0 m · kg, 7.2 ft · lb)

5. Install:
   - copper washers New
   - oil delivery pipe 1 ①
   - union bolts (M8) ②

18 Nm (1.8 m · kg, 13 ft · lb)

   - union bolt (M10) ③

20 Nm (2.0 m · kg, 14 ft · lb)

EBS00234

VALVES AND VALVE SPRINGS

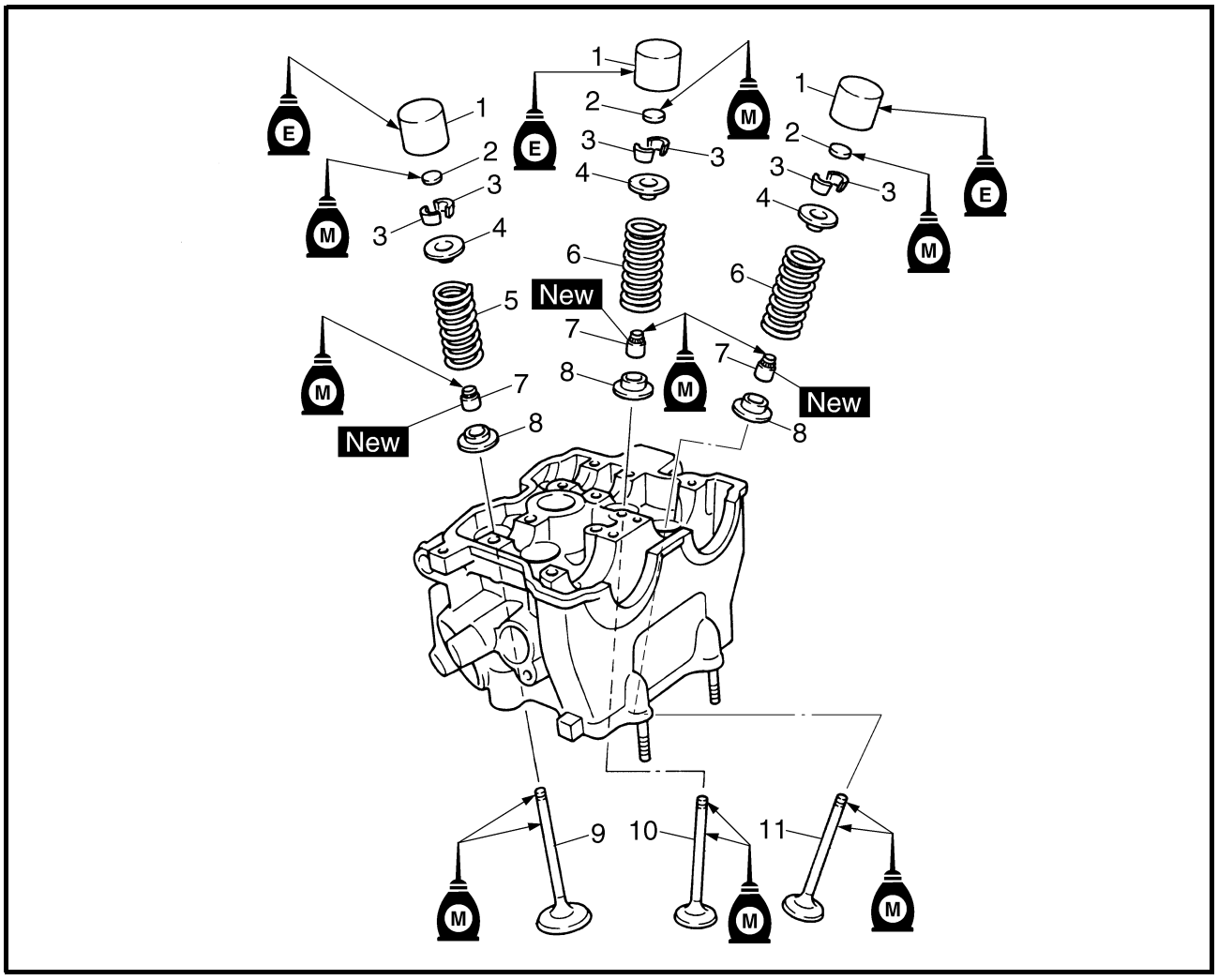

Order	Job/Part	Q'ty	Remarks
	Removing the valves and valve springs		Remove the parts in the order listed.
	Cylinder head		Refer to "CYLINDER HEAD".
1	Valve lifter	5	Refer to "REMOVING THE VALVES AND VALVE SPRINGS" and "INSTALLING THE VALVES AND VALVE SPRINGS".
2	Adjusting pad	5	
3	Valve cotter	10	
4	Upper valve spring seat	5	
5	Exhaust valve spring	2	red
6	Intake valve spring	3	blue

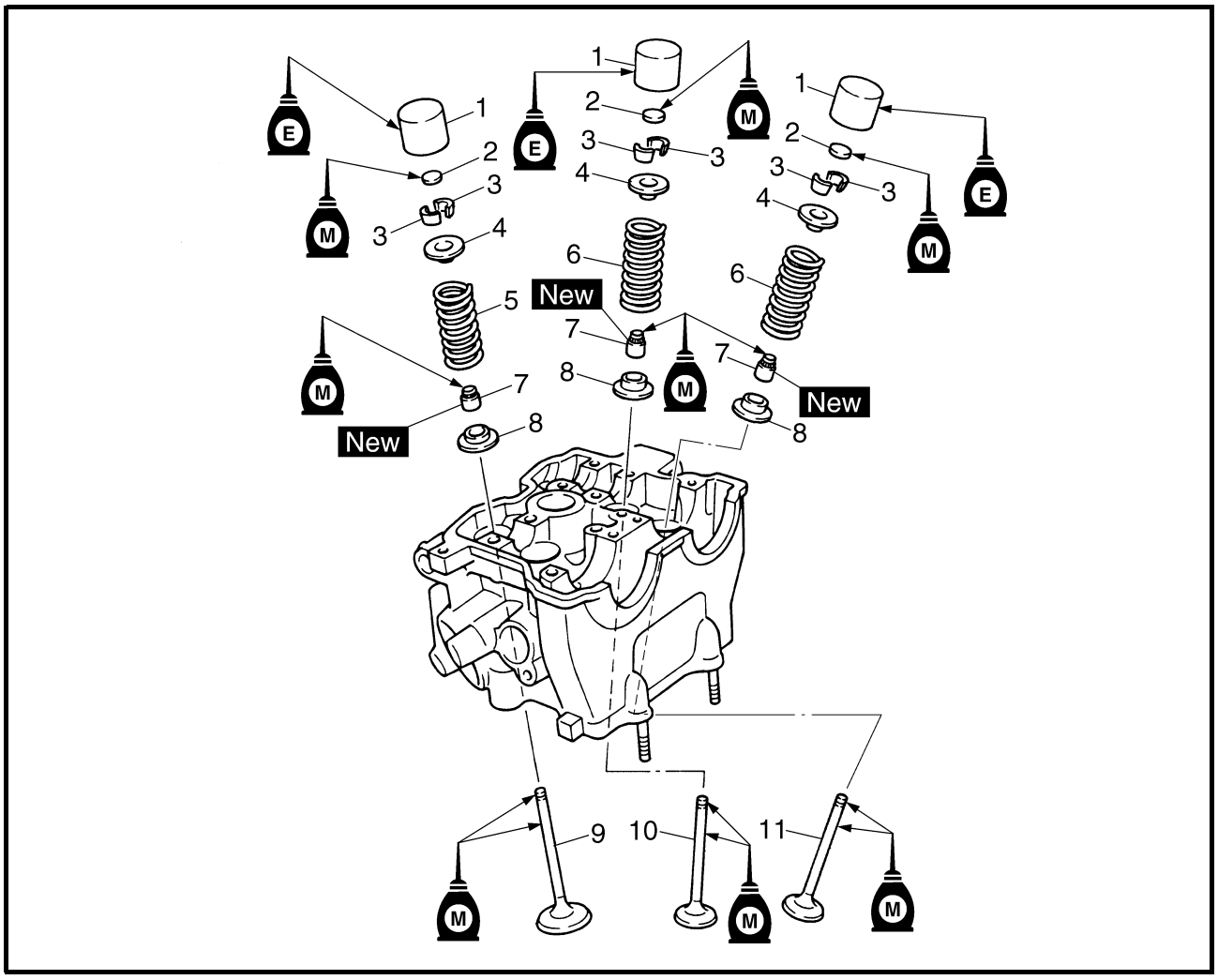

Order	Job/Part	Q'ty	Remarks
7	Stem seal	5	Refer to "REMOVING THE VALVES AND VALVE SPRINGS" and "INSTALLING THE VALVES AND VALVE SPRINGS".
8	Lower valve spring seat	5	
9	Exhaust valve	2	
10	Intake valve 1	1	ℓ = 76.3 mm (3.00 in)
11	Intake valve 2	2	ℓ = 77.2 mm (3.04 in)
			For installation, reverse the removal procedure.

EBS00238

REMOVING THE VALVES AND VALVE SPRINGS

The following procedure applies to all of the valves and related components.

NOTE:

Before removing the internal parts of the cylinder head (e.g., valves, valve springs, valve seats), make sure the valves properly seal.

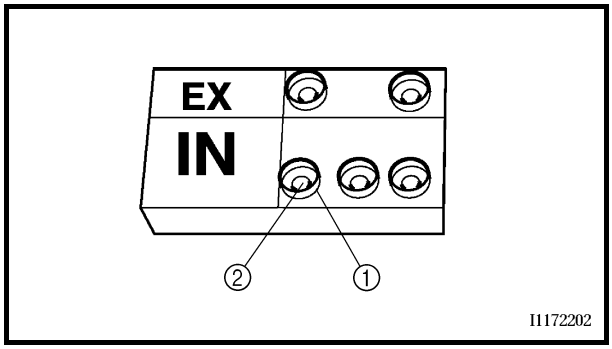

1. Remove:
   - valve lifter ①
   - valve pad ②

NOTE:

Make a note of the position of each valve lifter and valve pad so that they can be reinstalled in their original place.

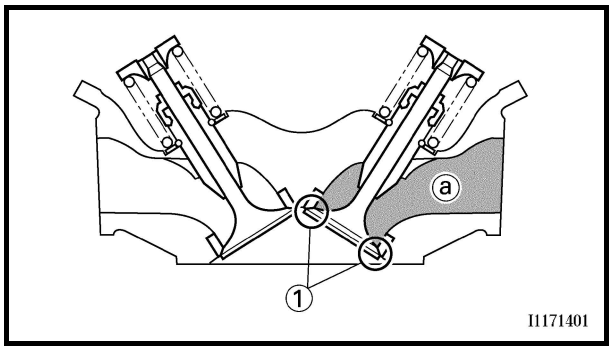

2. Check:
   - valve sealing
     Leakage at the valve seat → Check the valve face, valve seat and valve seat width.
     Refer to “CHECKING THE VALVES AND VALVE SPRINGS”.

▼▼▼▼▼▼▼▼▼▼▼▼▼▼▼▼▼▼▼▼▼▼▼▼▼▼▼▼▼▼▼▼▼▼

a. Pour a clean solvent ⓐ into the intake and exhaust ports.
b. Check that the valve seals properly.
   There should be no leakage at the valve seat ①.

▲▲▲▲▲▲▲▲▲▲▲▲▲▲▲▲▲▲▲▲▲▲▲▲▲▲▲▲▲▲▲▲▲▲

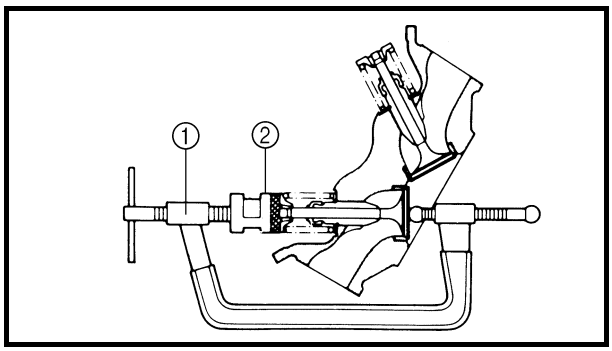

3. Remove:
   - valve cotters

NOTE:

Attach a valve spring compressor ① and attachment ② between the valve spring retainer and the cylinder head to remove the valve cotters.

Valve spring compressor
P/N. YM-04019, 90890-04019
Valve spring compressor attachment
P/N. YM-04114, 90890-04114

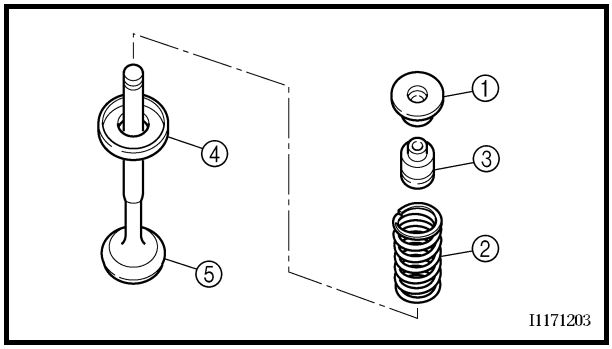

4. Remove:
   - upper valve spring seat ①
   - valve spring ②
   - valve stem seal ③
   - lower valve spring seat ④
   - valve ⑤

NOTE:
Identify the position of each part very carefully so that it can be reinstalled in its original place.

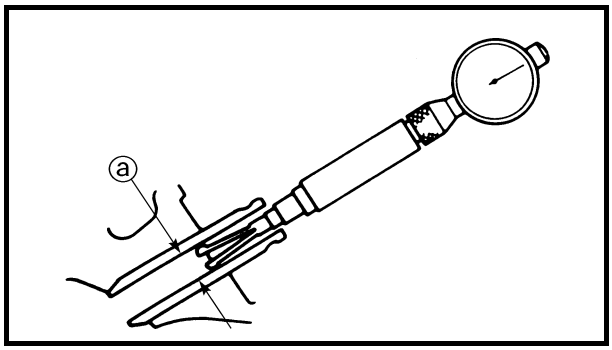

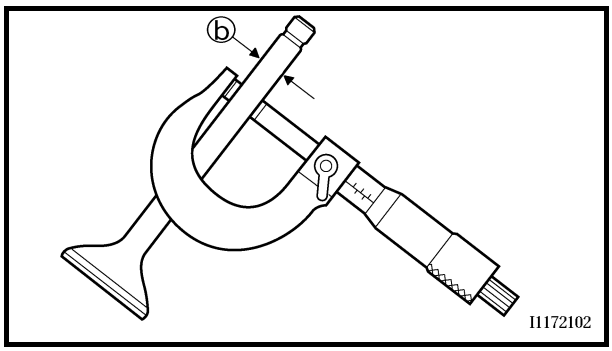

EBS00240

CHECKING THE VALVES AND VALVE SPRINGS

1. Measure:
   - stem-to-guide clearance

Stem-to-guide clearance =
valve guide inside diameter ⓐ -
valve stem diameter ⓑ

Out of specification → Replace the valve guide.

Stem-to-guide clearance
Intake
0.010 ~ 0.037 mm
(0.0004 ~ 0.0015 in)
<Limit>: 0.080 mm (0.003 in)
Exhaust
0.020 ~ 0.047 mm
(0.0008 ~ 0.0019 in)
<Limit>: 0.100 mm (0.004 in)

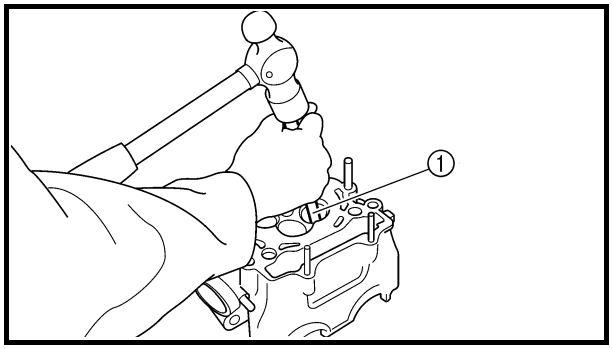

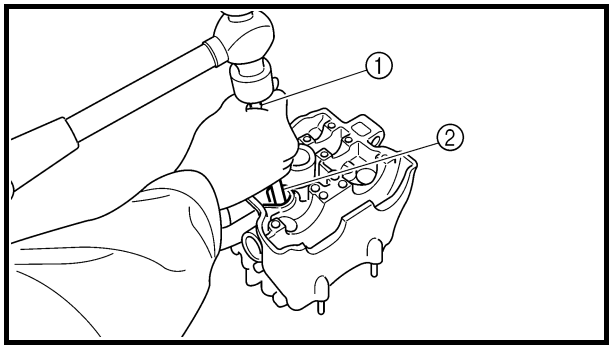

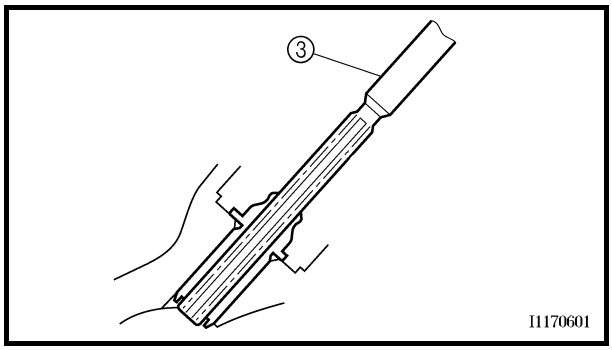

2. Replace:
   - valve guide

▼▼▼▼▼▼▼▼▼▼▼▼▼▼▼▼▼▼▼▼▼▼▼▼▼▼▼▼▼▼▼▼▼▼

NOTE:
To ease guide removal, installation and to maintain correct fit, heat the cylinder head to 100 °C (212 °F) in an oven.

a. Remove the valve guide using a valve guide remover ①.
b. Install the new valve guide using a valve guide remover ① and valve guide installer ②.
c. After installing the valve guide, bore the valve guide using a valve guide reamer ③ to obtain proper stem-to-guide clearance.

Valve guide remover
Intake (ø 4.5)
P/N. YM-04116/90890-04116
Exhaust (ø 5)
P/N. YM-04097/90890-04097
Valve guide installer
Intake (ø 4.5)
P/N. YM-04117/90890-04117
Exhaust (ø 5)
P/N. YM-04098/90890-04098
Valve guide reamer
Intake (ø 4.5)
P/N. YM-04118/90890-04118
Exhaust (ø 5)
P/N. YM-04099/90890-04099

NOTE:
After replacing the valve guide reface the valve seat.

▲▲▲▲▲▲▲▲▲▲▲▲▲▲▲▲▲▲▲▲▲▲▲▲▲▲▲▲▲▲▲▲▲▲

3. Check:
   - valve face
     Pitting/wear → Grind the face.
   - valve stem end
     Mushroom shape or diameter larger than the body of the stem → Replace.

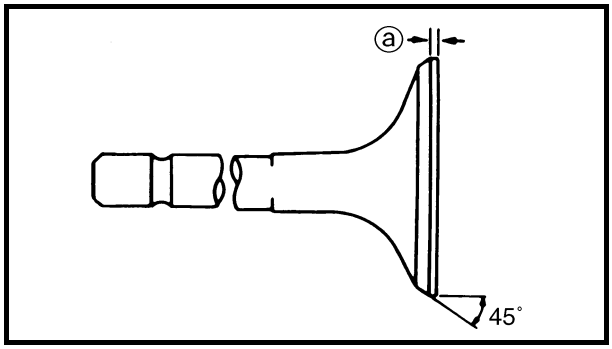

4. Measure:
   - margin thickness ⓐ
     Out of specification → Replace.

Margin thickness
Intake
1.0 mm (0.0394 in)
<Limit>: 0.85 mm (0.033 in)
Exhaust
1.0 mm (0.0394 in)
<Limit>: 0.85 mm (0.033 in)

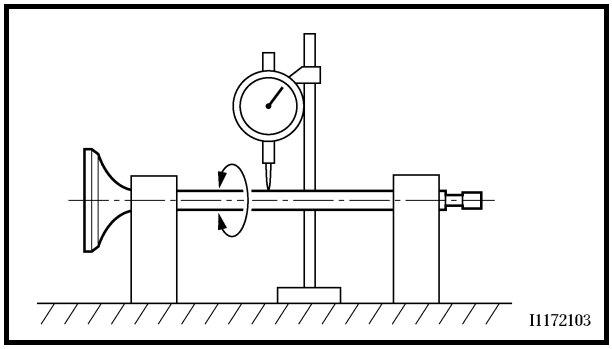

5. Measure:
   - valve stem runout
     Out of specification → Replace.

Valve stem runout
0.01 mm (0.0004 in)

NOTE:
- When installing a new valve always replace the guide.
- If the valve is removed or replaced always replace the oil seal.

6. Eliminate:
   - carbon deposits
     (from the valve face and valve seat)
7. Check:
   - valve seats
     Pitting/wear → Reface the valve seat.

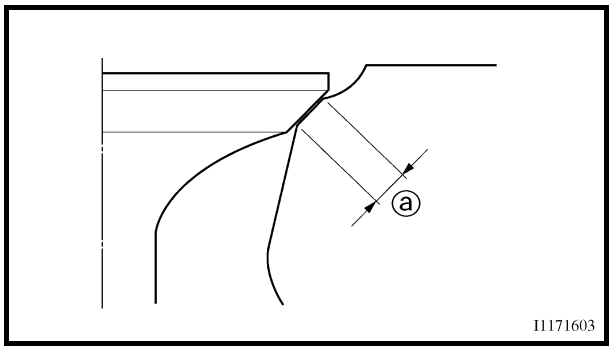

8. Measure:
   - valve seat width ⓐ
     Out of specification → Reface the valve seat.

Valve seat width
Intake
0.9 ~ 1.1 mm
(0.0354 ~ 0.0433 in)
<Limit>: 1.6 mm (0.06 in)
Exhaust
0.9 ~ 1.1 mm
(0.0354 ~ 0.0433 in)
<Limit>: 1.6 mm (0.06 in)

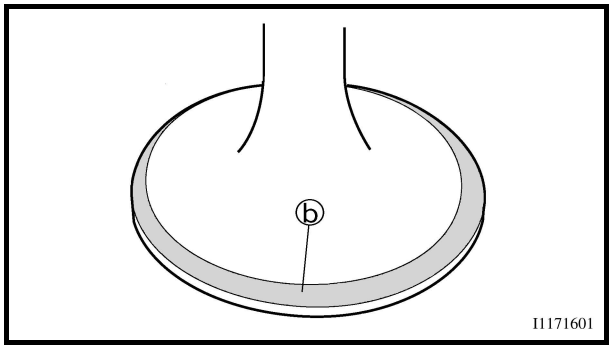

▼▼▼▼▼▼▼▼▼▼▼▼▼▼▼▼▼▼▼▼▼▼▼▼▼▼▼▼▼▼▼▼▼▼

a. Apply Mechanic's blueing dye (Dykem) ⓑ to the valve face.
b. Install the valve into the cylinder head.
c. Press the valve through the valve guide and onto the valve seat to make a clear pattern.
d. Measure the valve seat width. Where the valve seat and valve face made contact, blueing will have been removed.
e. If the valve seat is too wide, too narrow, or the seat is not centered, the valve seat must be refaced.

▲▲▲▲▲▲▲▲▲▲▲▲▲▲▲▲▲▲▲▲▲▲▲▲▲▲▲▲▲▲▲▲▲▲

9. Lap:
   - valve face
   - valve seat

NOTE:
After refacing the valve seat or replacing the valve and valve guide, the valve seat and valve face should be lapped.

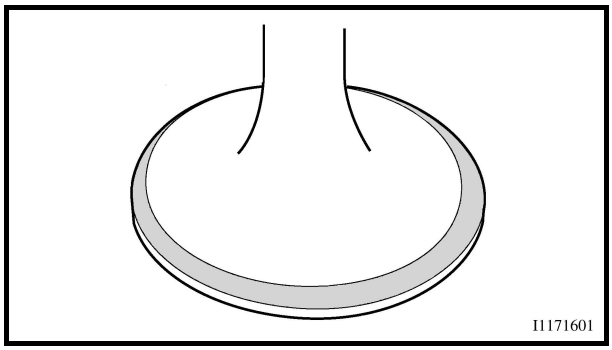

▼▼▼▼▼▼▼▼▼▼▼▼▼▼▼▼▼▼▼▼▼▼▼▼▼▼▼▼▼▼▼▼▼▼

a. Apply a coarse lapping compound to the valve face.

CAUTION:
Do not let the compound enter the gap between the valve stem and the valve guide.

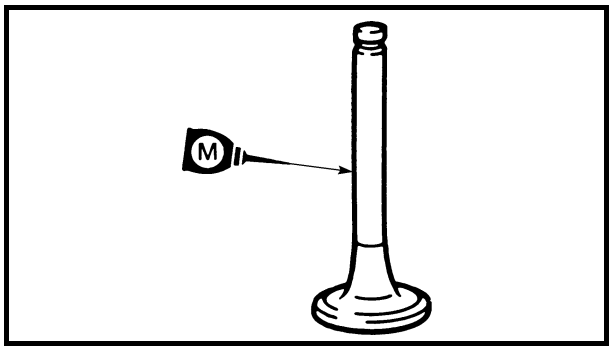

b. Apply molybdenum disulfide oil to the valve stem.
c. Install the valve into the cylinder head.
d. Turn the valve until the valve face and valve seat are evenly polished, then clean off all of the compound.

NOTE:
For best lapping results, lightly tap the valve seat while rotating the valve back and forth between your hands.

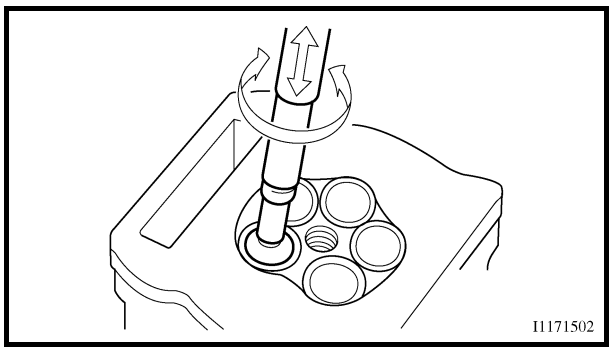

e. Apply a fine lapping compound to the valve face and repeat the above steps.

NOTE:
After every lapping operation be sure to clean off all of the compound from the valve face and valve seat.

f. Apply Mechanic's blueing dye (Dykem) to the valve face.
g. Install the valve into the cylinder head.
h. Press the valve through the valve guide and onto the valve seat to make a clear pattern.
i. Measure the valve seat width again. If the valve seat width is out of specification, reface and relap the valve seat.

▲▲▲▲▲▲▲▲▲▲▲▲▲▲▲▲▲▲▲▲▲▲▲▲▲▲▲▲▲▲▲▲

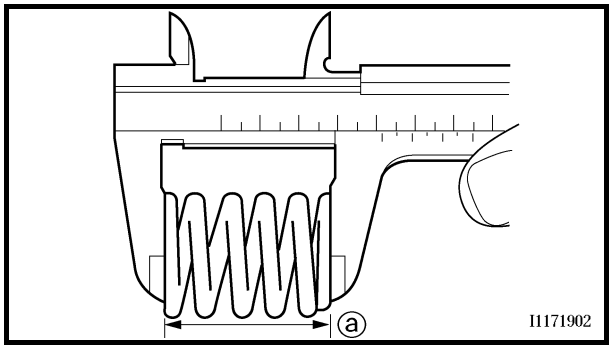

10.Measure:
- valve spring free length ⓐ
  Out of specification → Replace.

Valve spring free length
Intake
37.03 mm (1.46 in)
<Limit>: 35.17 mm (1.38 in)
Exhaust
37.68 mm (1.48 in)
<Limit>: 35.79 mm (1.41 in)

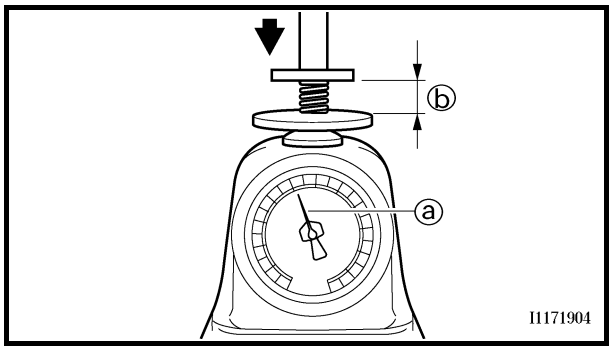

11.Measure:
- compressed valve spring force ⓐ
  Out of specification → Replace.

ⓑ Installed length

Compressed valve spring force (installed)
Intake
111.3 ~ 127.9 N at 27.87 mm (11.35 ~ 13.04 kg at 27.87 mm, 25.02 ~ 28.75 lb at 1.10 in)
Exhaust
127.4 ~ 146.4 N at 27.38 mm (12.99 ~ 14.93 kg at 27.38 mm, 28.64 ~ 32.91 lb at 1.08 in)

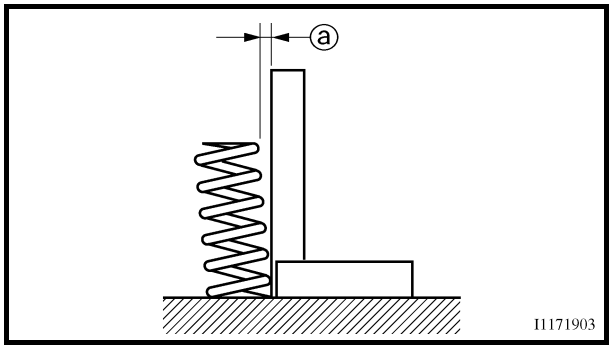

12.Measure:
- valve spring tilt ⓐ
  Out of specification → Replace.

Valve spring tilt limit
Intake
2.5°/1.61 mm (0.063 in)
Exhaust
2.5°/1.65 mm (0.065 in)

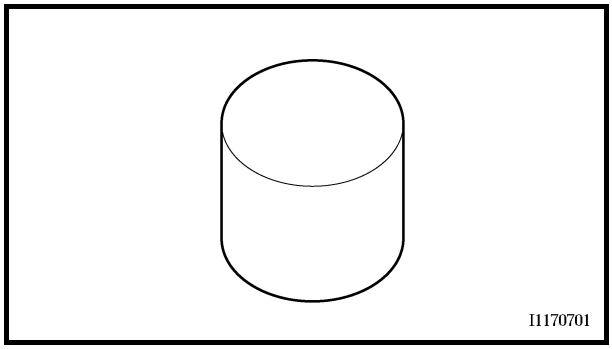

EAS00242
CHECKING THE VALVE LIFTERS

The following procedure applies to all of the valve lifters.

1. Check:
   - valve lifter
     Damage/scratches → Replace the valve lifters and cylinder head.

EBS00241
INSTALLING THE VALVES AND VALVE SPRINGS

1. Apply:
   - molybdenum disulfide oil
     (onto the valve stem and valve stem seal)

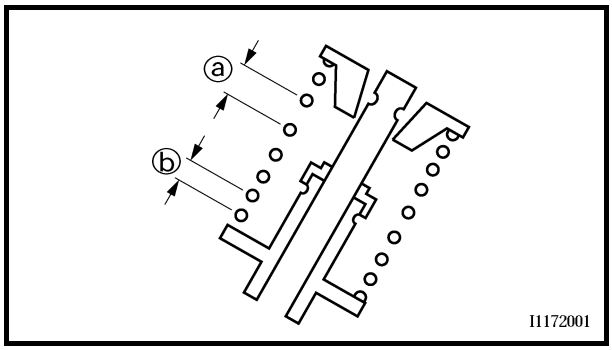

2. Install:
   - valves
   - lower valve spring seats
   - valve stem seals New
   - valve springs
   - upper valve spring seats

NOTE:
Install the valve springs with the larger pitch ⓐ facing upwards.

ⓑ Smaller pitch

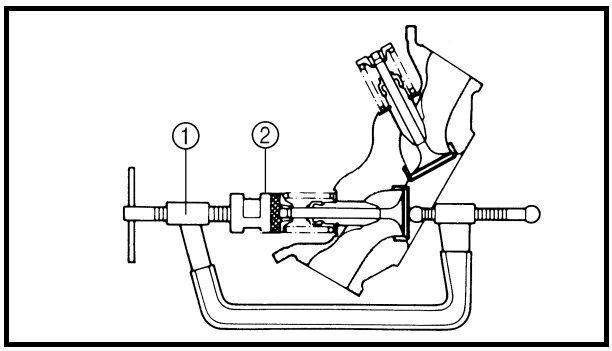

3. Install:
   - valve cotters

NOTE:
Install the valve cotters while compressing the valve spring with the valve spring compressor ① and attachment ②.

Valve spring compressor
P/N. YM-04019, 90890-04019
Valve spring compressor attachment
P/N. YM-04114, 90890-04114

4. To secure the valve cotters onto the valve stem, lightly tap the valve tip with a piece of wood.

CAUTION:
Hitting the valve tip with excessive force could damage the valve.

5. Install:
   - valve pads
   - valve lifters

NOTE:
- Lubricate the valve lifters with engine oil and valve pads with molybdenum disulfide oil.
- The valve lifters must move smoothly when rotated with a finger.
- Each valve lifter and valve pad must be reinstalled in its original position.

EBS00245

CYLINDER AND PISTON

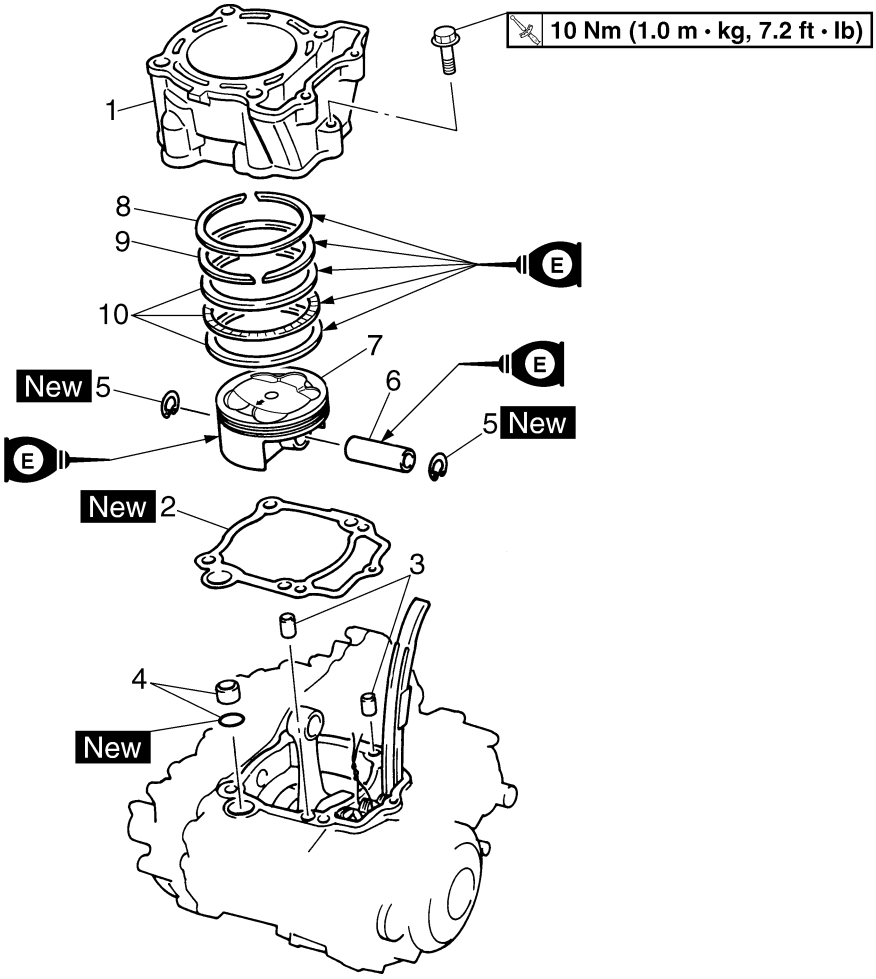

Order	Job/Part	Q'ty	Remarks
	Removing the cylinder and piston		Remove the parts in the order listed.
	Cylinder head		Refer to "CYLINDER HEAD".
1	Cylinder	1	Refer to "INSTALLING THE CYLINDER".
2	Cylinder gasket	1	
3	Dowel pin	2	
4	Dowel pin/O-ring	1/1	
5	Piston pin clip	2	
6	Piston pin	1	
7	Piston	1	Refer to "REMOVING THE PISTON" and "INSTALLING THE PISTON".
8	Top ring	1	
9	2nd ring	1	
10	Oil ring	1	
			For installation, reverse the removal procedure.

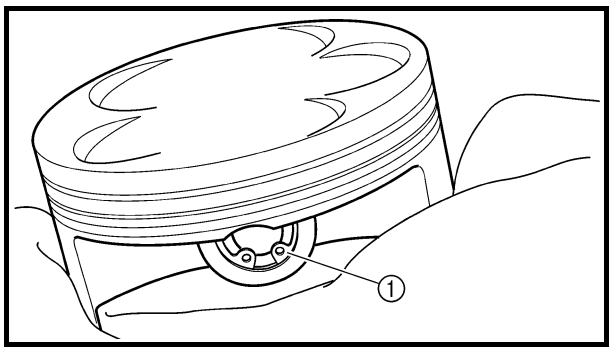

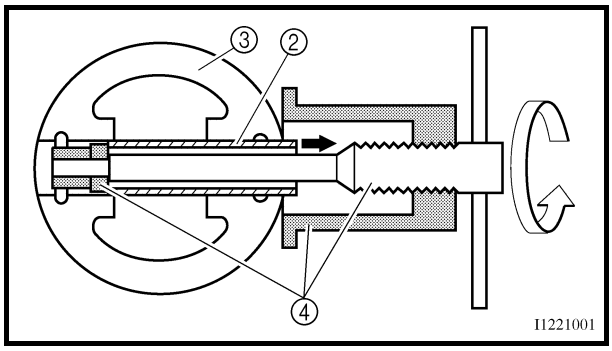

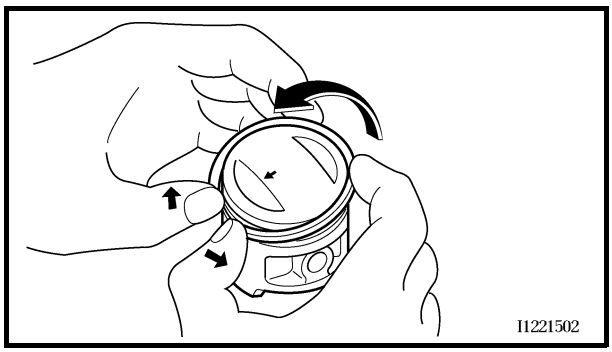

EBS00247

REMOVING THE PISTON

1. Remove:
   - piston pin clips ①
   - piston pin ②
   - piston ③

NOTE:

Before removing each piston pin, deburr the clip groove and pin hole area. If the piston pin groove is deburred and the piston pin is still difficult to remove, use the piston pin puller ④.

Piston pin puller
P/N. YU-01304, 90890-01304

CAUTION:

Do not use a hammer to drive the piston pin out.

2. Remove:
   - piston rings

NOTE:

Spread the end gaps apart while at the same time lifting the piston ring over the top of the piston crown, as shown in the illustration.

EBS00248

CHECKING THE CYLINDER AND PISTON

1. Check:
   - piston wall
   - cylinder wall
     Vertical scratches → Replace the cylinder, and the piston and piston rings as a set.

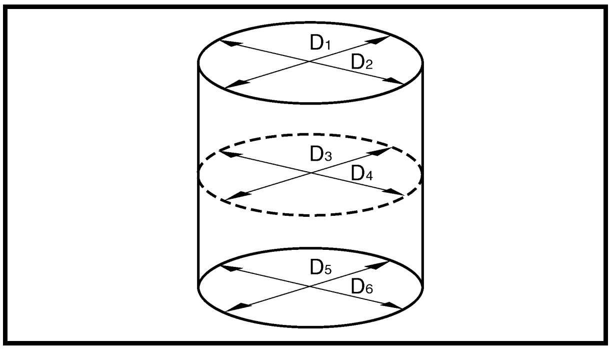

2. Measure:
   - piston-to-cylinder clearance

▼▼▼▼▼▼▼▼▼▼▼▼▼▼▼▼▼▼▼▼▼▼▼▼▼▼▼▼▼▼▼▼▼▼

a. Measure the cylinder bore “C” with a cylinder bore gauge.

NOTE:

Measure the cylinder bore “C” in parallel to and right angles to the crankshaft. Then, find the average of the measurements.

Cylinder bore “C”	**95.00 ~ 95.01 mm (3.7402 ~ 3.7406 in)**
Taper limit “T”	**0.05 mm (0.002 in)**
Out of round “R”	**0.05 mm (0.002 in)**
“C” = Maximum D	
“T” = (Maximum D_1 or D_2) – (Maximum D_5 or D_6)	
“R” = (Maximum D_1, D_3 or D_5) – (Minimum D_2, D_4 or D_6)	

b. If out of specification, replace the cylinder, and the piston and piston rings as a set.

c. Measure piston skirt diameter “P” with the micrometer.

ⓐ 10 mm (0.39 in) from the bottom edge of the piston

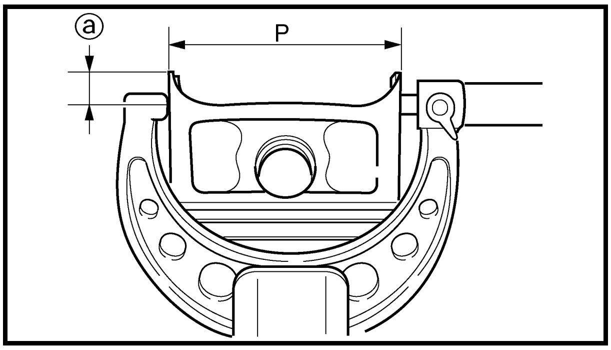

Piston size “P”	
Standard	**94.945 ~ 94.960 mm (3.7380 ~ 3.7386 in)**

d. If out of specification, replace the piston and piston rings as a set.

e. Calculate the piston-to-cylinder clearance with the following formula.

Piston-to-cylinder clearance =
Cylinder bore “C” -
Piston skirt diameter “P”

Piston-to-cylinder clearance
0.04 ~ 0.065 mm
(0.0016 ~ 0.0026 in)
<Limit>: 0.10 mm (0.004 in)

f. If out of specification, replace the cylinder, and the piston and piston rings as a set.

▲▲▲▲▲▲▲▲▲▲▲▲▲▲▲▲▲▲▲▲▲▲▲▲▲▲▲▲▲▲▲▲

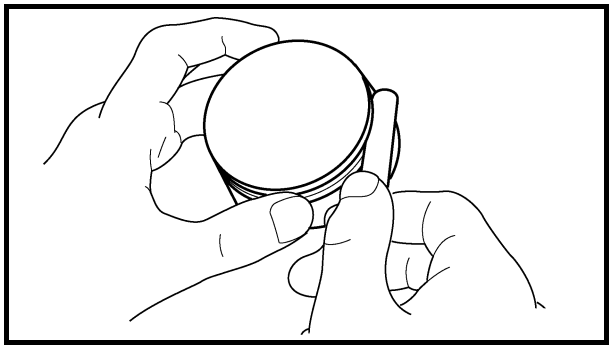

EBS00250

CHECKING THE PISTON RINGS

1. Measure:
   - piston ring side clearance
     Out of specification → Replace the piston and piston rings as a set.

NOTE:

Before measuring the piston ring side clearance, eliminate any carbon deposits from the piston ring grooves and piston rings.

Piston ring side clearance
Top ring
0.030 ~ 0.065 mm
(0.0012 ~ 0.0026 in)
<Limit>: 0.12 mm (0.0047 in)
2nd ring
0.020 ~ 0.055 mm
(0.0008 ~ 0.0022 in)
<Limit>: 0.12 mm (0.0047 in)

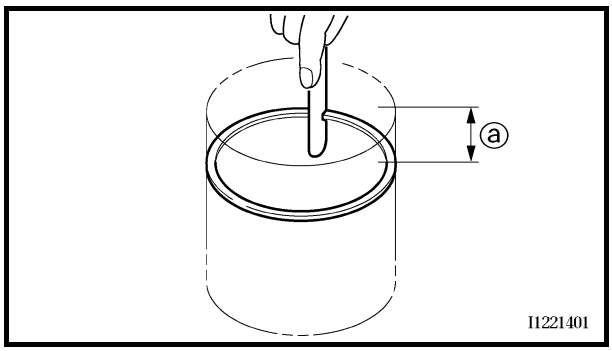

2. Install:
   - piston ring
     (into the cylinder)

NOTE:

Level the piston ring into the cylinder with the piston crown.

ⓐ 10 mm (0.39 in)

3. Measure:
   - piston ring end gap
     Out of specification → Replace the piston ring.

NOTE:
The oil ring expander spacer's end gap cannot be measured. If the oil ring rail's gap is excessive, replace all three piston rings.

Piston ring end gap
Top ring
0.20 ~ 0.30 mm
(0.008 ~ 0.012 in)
<Limit>: 0.55 mm (0.022 in)
2nd ring
0.35 ~ 0.50 mm
(0.014 ~ 0.020 in)
<Limit>: 0.85 mm (0.034 in)
Oil ring
0.20 ~ 0.50 mm
(0.008 ~ 0.020 in)

EBS00251
CHECKING THE PISTON PIN

1. Check:
   - piston pin
     Blue discoloration/grooves → Replace the piston pin and then check the lubrication system.

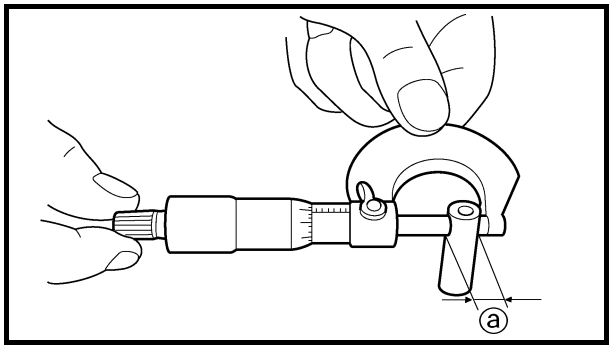

2. Measure:
   - piston pin outside diameter ⓐ
     Out of specification → Replace the piston pin.

Piston pin outside diameter
19.991 ~ 20.000 mm
(0.7870 ~ 0.7874 in)
<Limit>: 19.971 mm (0.786 in)

3. Measure:
   - piston pin bore inside diameter
     Out of specification → Replace the piston.

Piston pin bore inside diameter
20.004 ~ 20.015 mm
(0.7876 ~ 0.7880 in)
<Limit>: 20.045 mm (0.789 in)

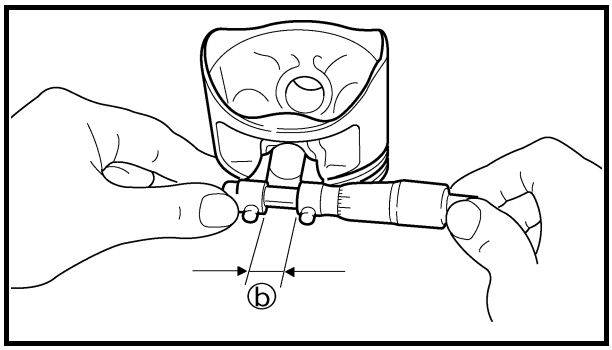

4. Calculate:
   - piston-pin-to-piston-pin-bore clearance
     Out of specification → Replace the piston pin and piston as a set.

Piston-pin-to-piston-pin-bore clearance =
Piston pin bore diameter ⓑ –
Piston pin outside diameter ⓐ

Piston-pin-to-piston clearance
0.004 ~ 0.024 mm
(0.0002 ~ 0.0009 in)
<Limit>: 0.074 mm (0.0029 in)

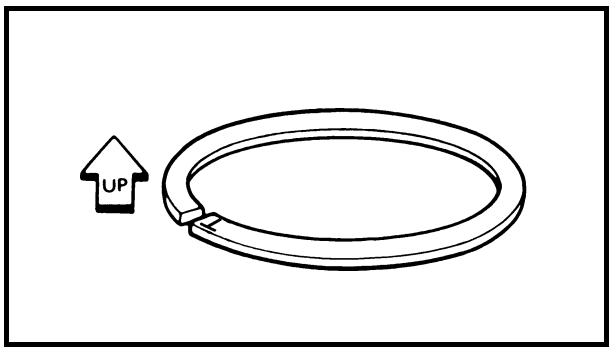

EBS00252

INSTALLING THE PISTON

1. Install:
   - piston rings
     (onto the piston)

NOTE:

- Be sure to install the piston rings so that the manufacturer's marks or numbers are located on the upper side of the rings.
- Lubricate the piston and piston rings liberally with engine oil.

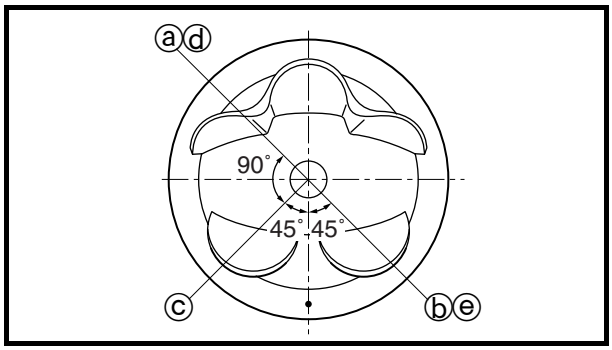

2. Position:
   - top ring
   - 2nd ring
   - oil ring
     Offset the piston ring end gaps as shown.

ⓐ Top ring end
ⓑ 2nd ring end
ⓒ Oil ring end (upper)
ⓓ Oil ring
ⓔ Oil ring end (lower)

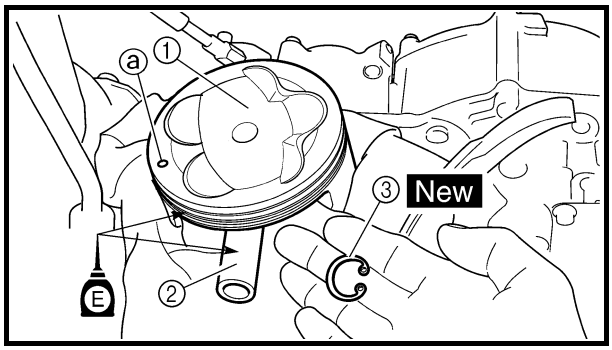

3. Install:
   - piston ①
   - piston pin ②
   - piston pin clips ③ New

NOTE:

- Apply engine oil onto the piston pin, piston rings and piston.
- Be sure that the punch mark ⓐ on the piston points to the exhaust side of the engine.
- Before installing the piston pin clips, cover the crankcase with a clean rag to prevent the piston pin clips from falling into the crankcase.
- Install the piston clips with their ends facing downward.

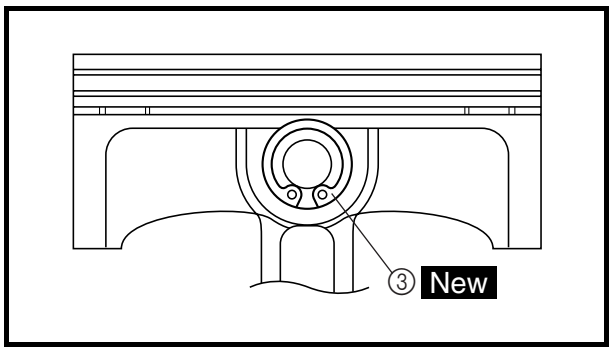

4. Lubricate:
   - piston
   - piston rings
   - cylinder

NOTE:
Apply a liberal coating of engine oil.

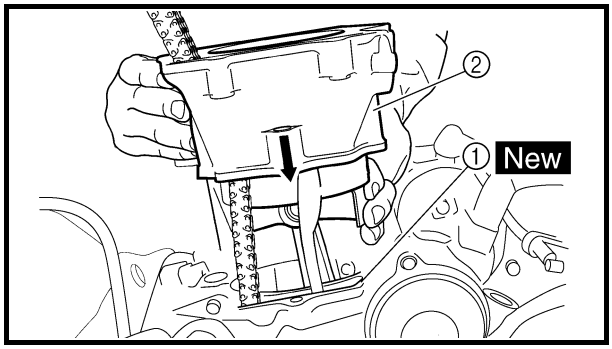

EBS00253
INSTALLING THE CYLINDER

1. Install:
   - cylinder gasket ① New
   - dowel pins
   - O-ring
   - cylinder ②
   - bolts **10 Nm (1.0 m · kg, 7.2 ft · lb)**

NOTE:
Install the cylinder with one hand while compressing the piston rings with the other hand.

CAUTION:
- **Be careful not to damage the timing chain damper during installation.**
- **Pass the timing chain through the timing chain cavity.**

EBS00256

A.C. MAGNETO

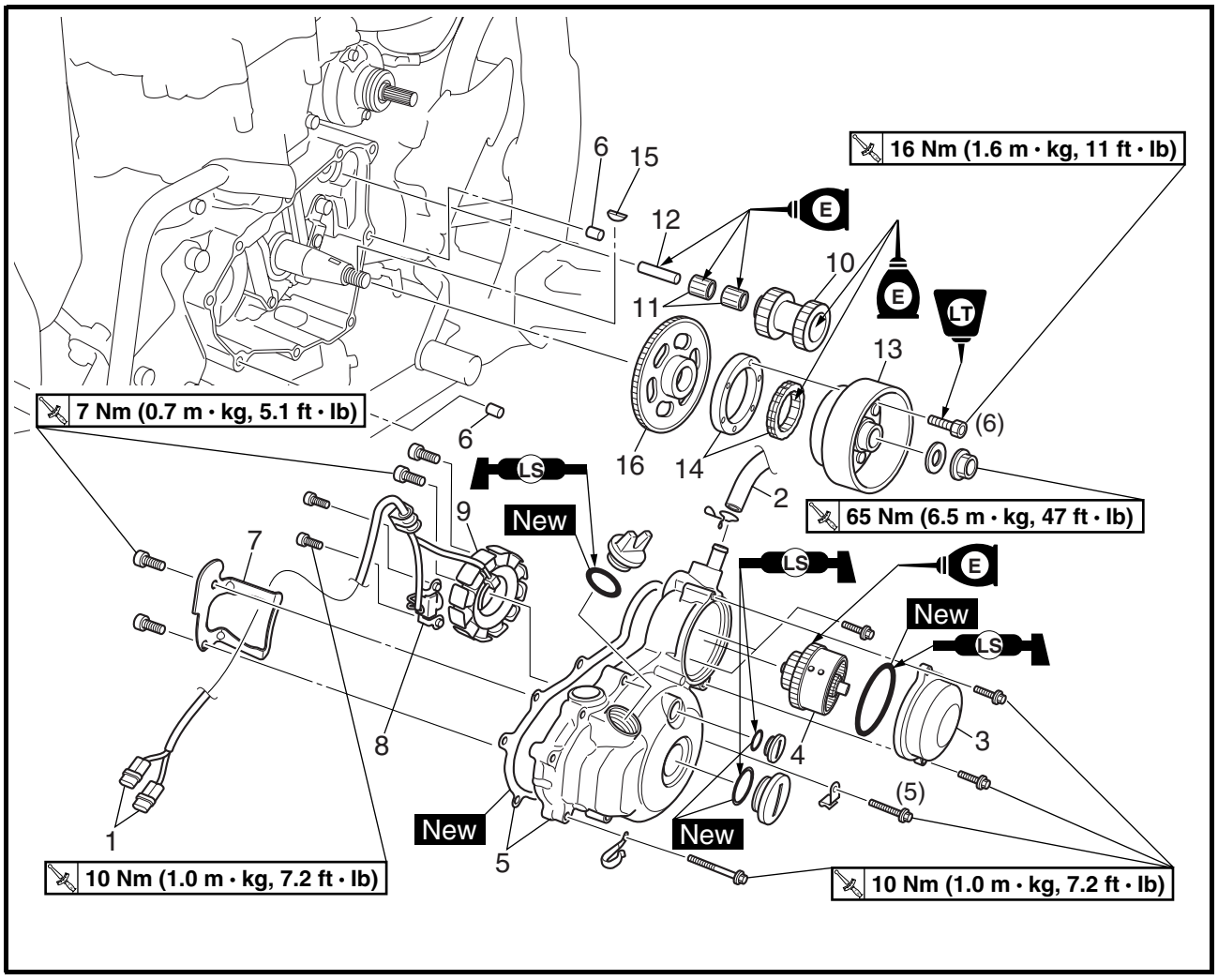

Order	Job/Part	Q'ty	Remarks
	Removing the A.C. magneto		Remove the parts in the order listed.
	Engine oil		Drain.
	Front fender		Refer to "SEAT, FENDERS AND FUEL TANK" in chapter 3.
1	A.C. magneto coupler	2	Disconnect.
2	Crankcase breather hose	1	
3	Torque limiter cover	1	Refer to "REMOVING THE A.C. MAGNETO ROTOR" and "INSTALLING THE A.C. MAGNETO ROTOR".
4	Torque limiter	1	**NOTE:** Do not disassemble.
5	A.C. magneto cover/gasket	1/1	
6	Dowel pin	2	
7	Lead holder	1	
8	Pickup coil	1	

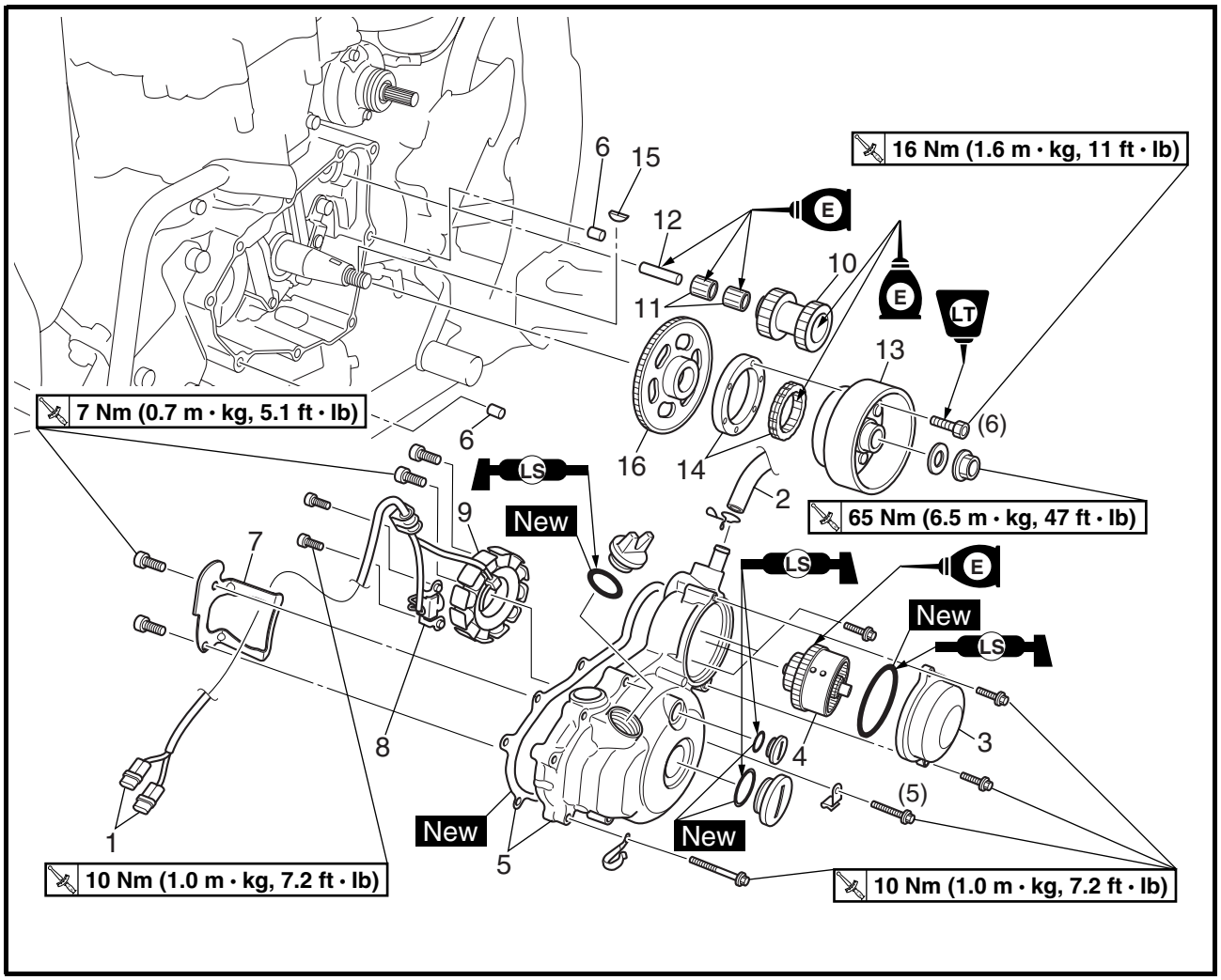

Order	Job/Part	Q'ty	Remarks
9	Stator coil	1	
10	Starter idle gear	1	
11	Bearing	2	
12	Starter idle gear shaft	1	
13	A.C. magneto rotor	1	Refer to "REMOVING THE A.C. MAGNETO ROTOR" and "INSTALLING THE A.C. MAGNETO ROTOR".
14	Starter clutch	1	
15	Woodruff key	1	
16	Starter wheel gear	1	
			For installation, reverse the removal procedure.

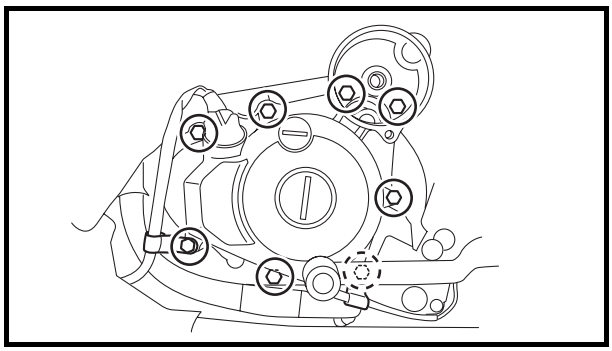

EBS00259

REMOVING THE A.C. MAGNETO ROTOR

1. Remove:
   - A.C. magneto cover

NOTE:

Loosen each bolt 1/4 of a turn at a time, in stages and in a crisscross pattern. After all of the bolts are fully loosened, remove them.

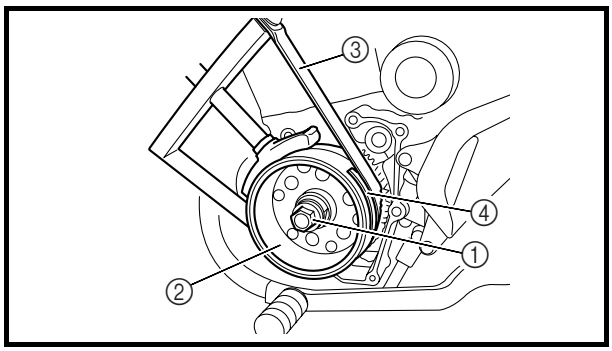

2. Remove:
   - A.C. magneto rotor nut ①
   - washer

NOTE:

- While holding the A.C. magneto rotor ② with the sheave holder ③, loosen the rotor nut.
- Do not allow the sheave holder to touch the projection ④ on the rotor.

Sheave holder
P/N. YS-01880-A, 90890-01701

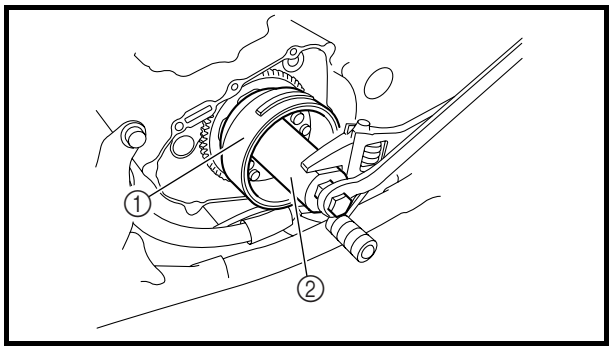

3. Remove:
   - A.C. magneto rotor ①

NOTE:

Use the rotor puller ②.

Rotor puller
P/N. YM-04142, 90890-04142

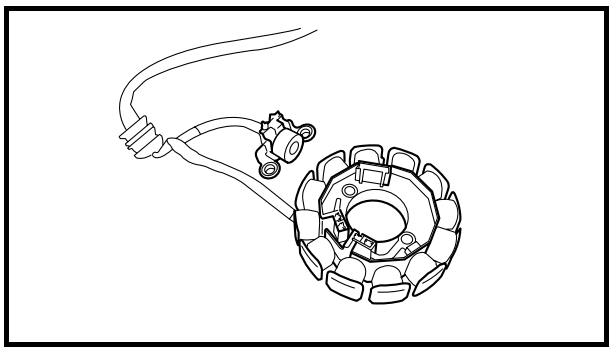

EBS00262

CHECKING THE STATOR COIL AND PICKUP COIL

1. Check:
   - stator coil
   - pickup coil
     Damage → Replace the pickup coil/stator assembly.

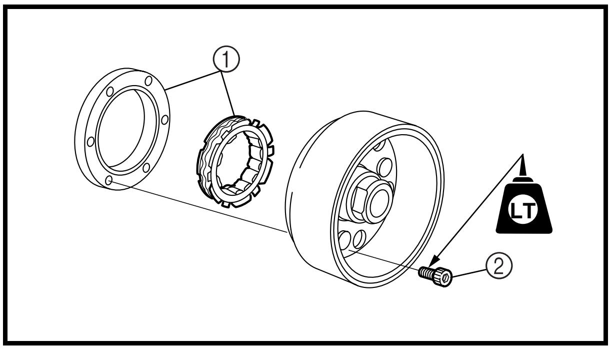

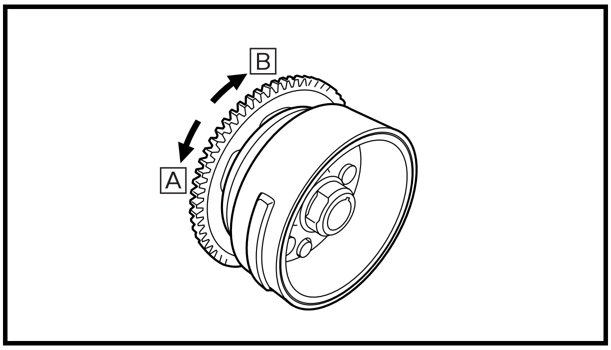

EBS00263

CHECKING THE STARTER CLUTCH

1. Check:
   - starter one-way clutch ①
     Cracks/damage → Replace.
   - bolts ②
     Loose → Replace with a new one, and clinch the end of the bolt.

Starter clutch bolt
16 Nm (1.6 m · kg, 11 ft · lb)
LOCTITE®

▼▼▼▼▼▼▼▼▼▼▼▼▼▼▼▼▼▼▼▼▼▼▼▼▼▼▼▼▼▼▼▼

a. Install the starter wheel gear to the starter clutch, and hold the starter clutch.

b. When turning the starter wheel gear counter clockwise A, the starter clutch and the wheel gear should be engaged.
   If not, the starter clutch is faulty. Replace it.

c. When turning the starter wheel gear clockwise B, the starter wheel gear should turn freely.
   If not, the starter clutch is faulty. Replace it.

▲▲▲▲▲▲▲▲▲▲▲▲▲▲▲▲▲▲▲▲▲▲▲▲▲▲▲▲▲▲▲▲

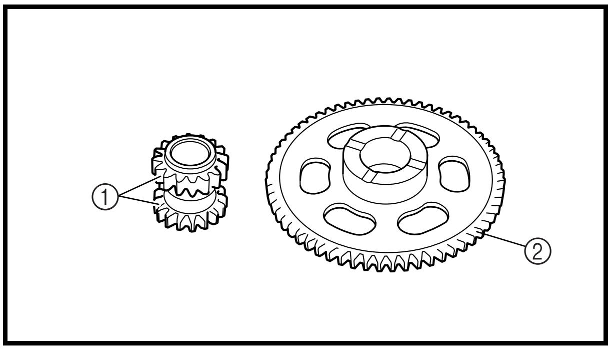

2. Check:
   - starter idle gear teeth ①
   - starter wheel gear teeth ②
     Burrs/clips/roughness/wear → Replace.

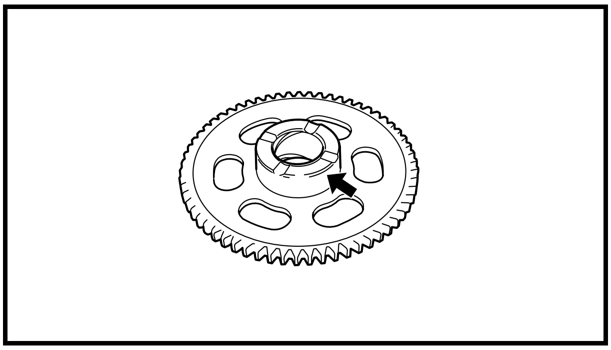

3. Check:
   - starter wheel gear
     (contacting surface)
     Damage/pitting/wear → Replace.

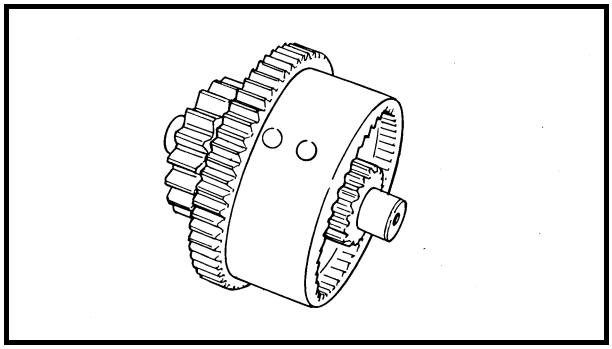

CHECKING THE TORQUE LIMITER

1. Check:
   - torque limiter
     Damage/wear → Replace.

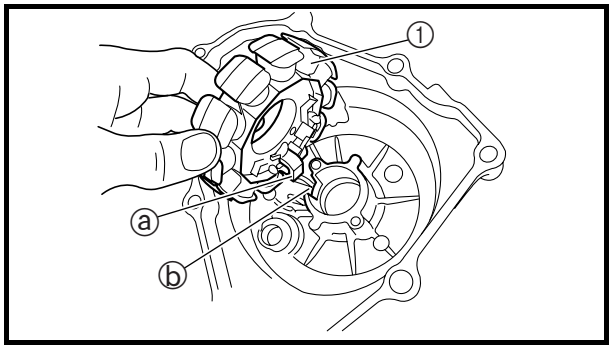

EBS00268

INSTALLING THE A.C. MAGNETO ROTOR

1. Install:
   - stator coil ①
   - pickup coil

NOTE:

Align the projection ⓐ on the stator coil with the slot ⓑ in the A.C. magneto cover.

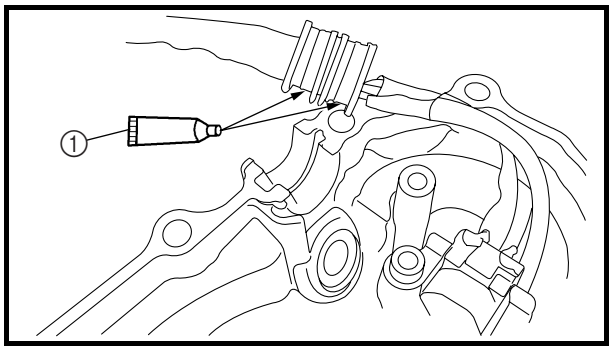

2. Apply:
   - sealant (Quick Gasket®) or Yamaha bond No. 1215 ①
     (into the slit)

Sealant (Quick Gasket®)
P/N. ACC-11001-05-01
Yamaha bond No. 1215
P/N. 90890-85505

3. Install:
   - woodruff key
   - A.C. magneto rotor

NOTE:

- Before installing the rotor, clean the outside of the crankshaft and the inside of the rotor.
- After installing the rotor, check that the rotor rotates smoothly. If not, reinstall the key and rotor.

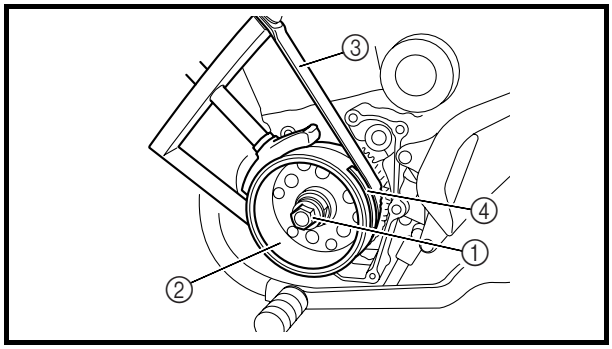

4. Tighten:
   - A.C. magneto rotor nut ①

65 Nm (6.5 m · kg, 47 ft · lb)

NOTE:
- While holding the A.C. magneto rotor ② with the sheave holder ③, tighten the A.C. magneto rotor nut.
- Do not allow the sheave holder to touch the projection ④ on the rotor.

Sheave holder
P/N. YS-01880-A, 90890-01701

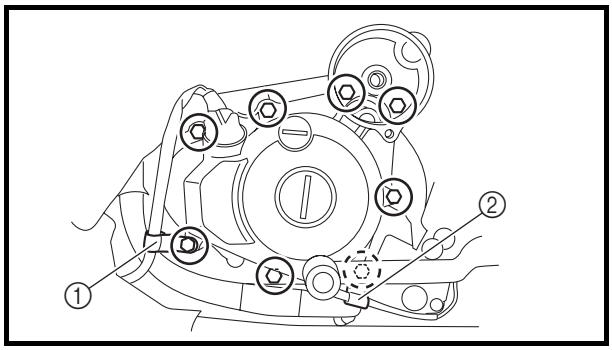

5. Install:
   - gasket New
   - A.C. magneto cover
   - A.C. magneto lead holder ①
   - neutral switch lead holder ②
   - bolts **10 Nm (1.0 m · kg, 7.2 ft · lb)**

NOTE:
Tighten the A.C. magneto cover bolts in stages, using a crisscross pattern.

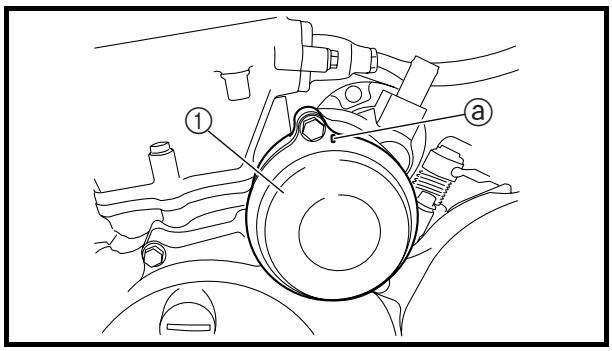

6. Install:
   - torque limiter cover ①

10 Nm (1.0 m · kg, 7.2 ft · lb)

NOTE:
Install the torque limiter cover with the projection ⓐ facing up.

EBS00291

CLUTCH

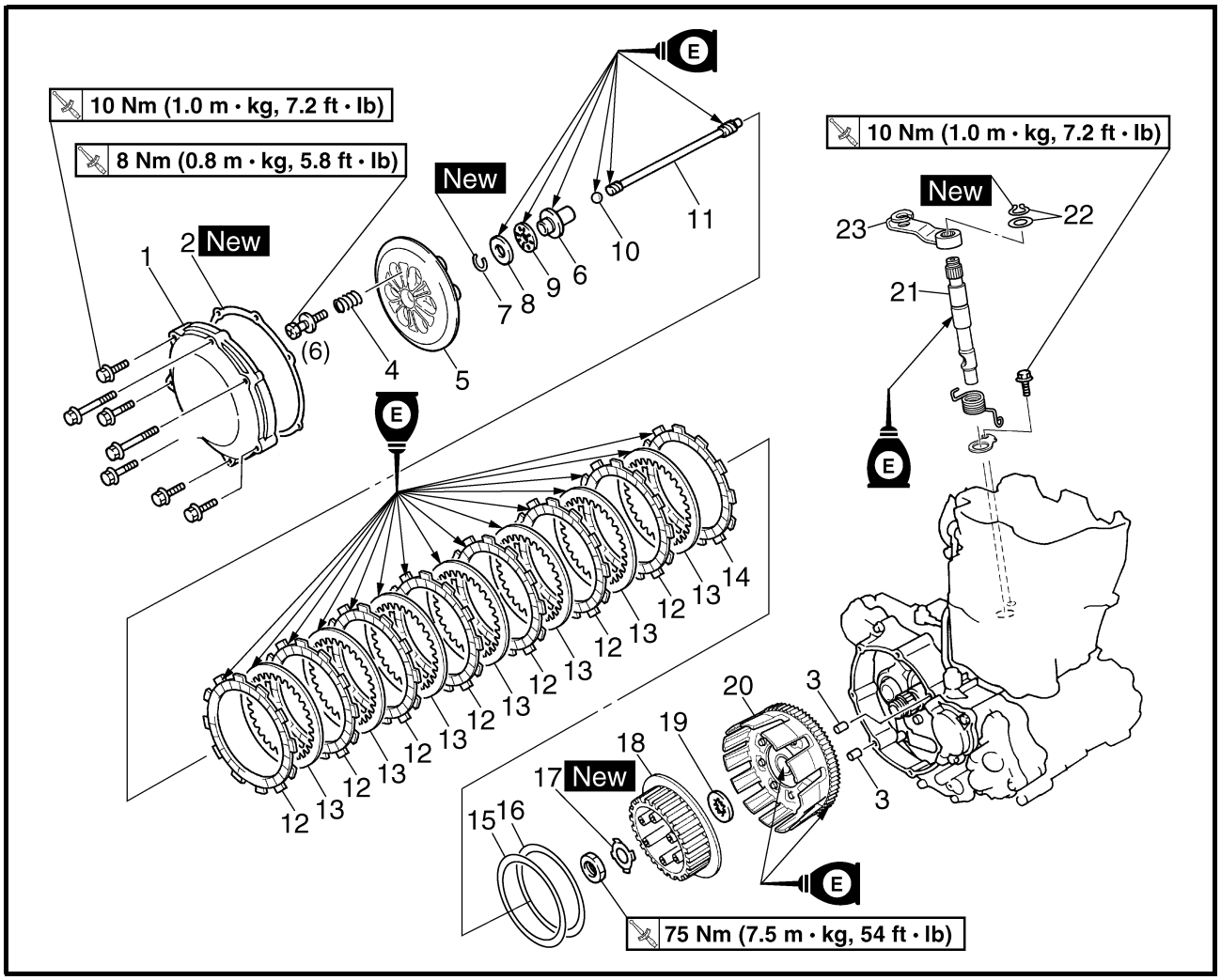

Order	Job/Part	Q'ty	Remarks
	Removing the clutch		Remove the parts in the order listed.
	Engine oil		Drain.
	Clutch cable		Refer to "LEADS, CABLES AND HOSES".
1	Clutch cover	1	Refer to "REMOVING THE CLUTCH" and "INSTALLING THE CLUTCH".
2	Gasket	1	
3	Dowel pin	2	
4	Clutch spring	6	Refer to "INSTALLING THE CLUTCH".
5	Pressure plate	1	
6	Push rod 1	1	
7	Circlip	1	
8	Plain washer	1	
9	Bearing	1	
10	Ball	1	

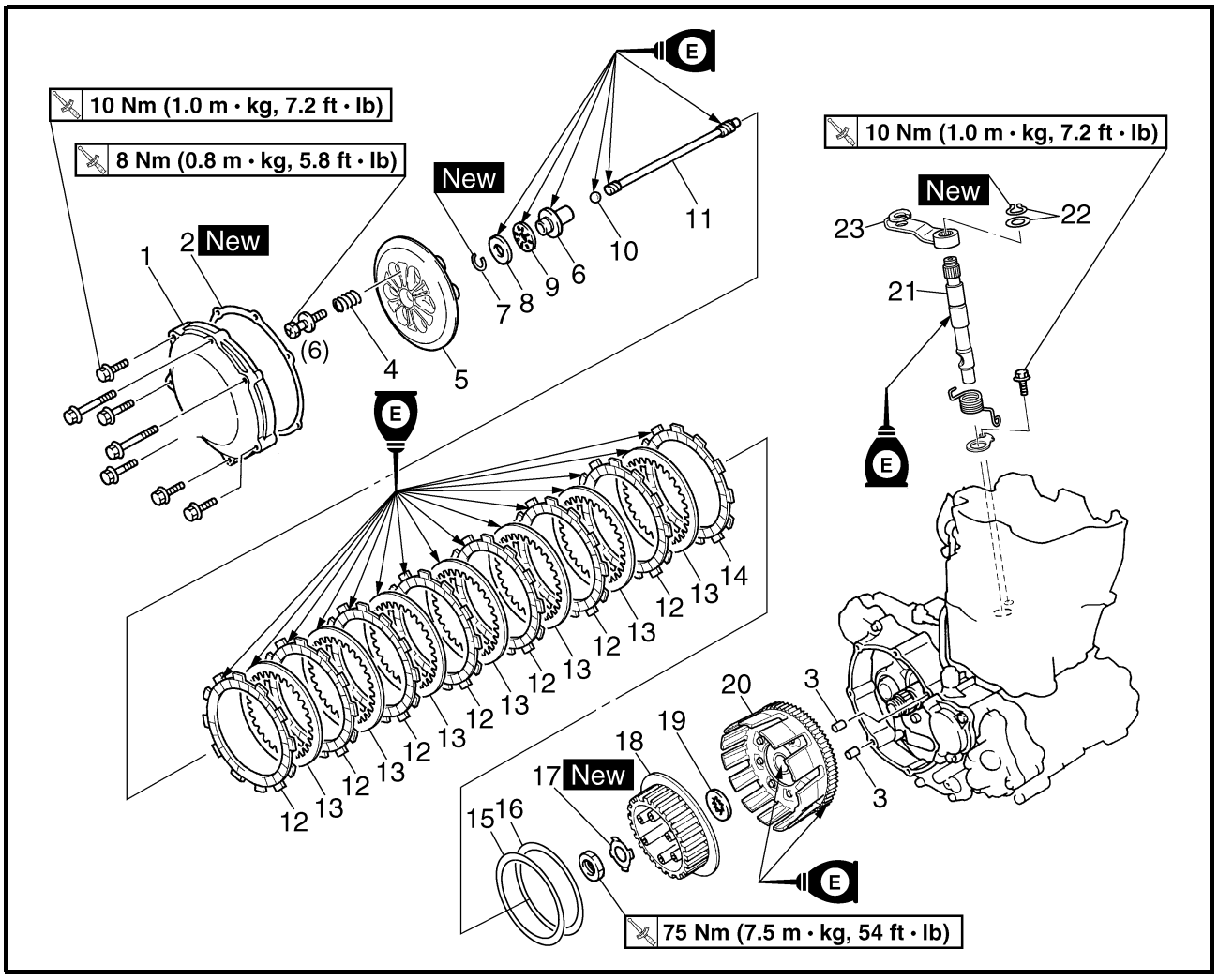

Order	Job/Part	Q'ty	Remarks
11	Push rod 2	1	
12	Friction plate 1	7	Refer to "INSTALLING THE CLUTCH".
13	Clutch plate	7	
14	Friction plate 2	1	
15	Spring washer	1	
16	Seat plate	1	
17	Lock washer	1	Refer to "REMOVING THE CLUTCH" and "INSTALLING THE CLUTCH".
18	Clutch boss	1	
19	Thrust washer	1	
20	Clutch housing	1	
21	Push lever shaft	1	Refer to "INSTALLING THE CLUTCH".
22	Circlip/washer	1/1	
23	Push lever	1	
			For installation, reverse the removal procedure.

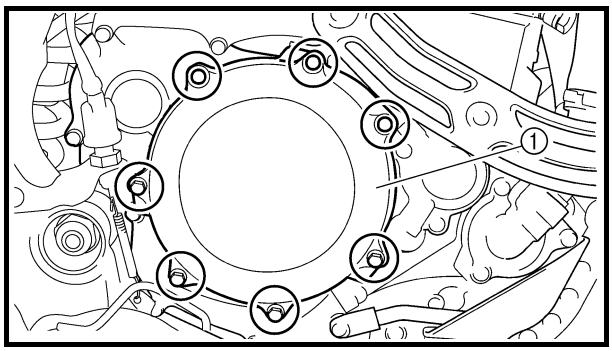

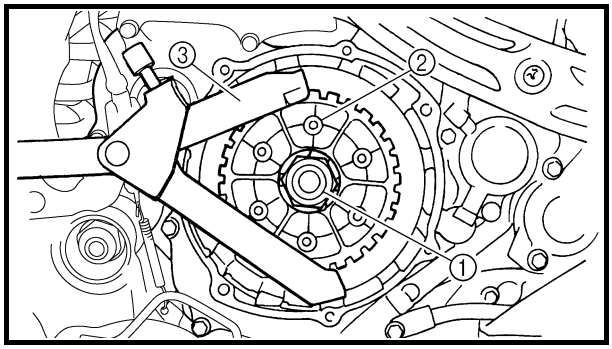

EBS00297

REMOVING THE CLUTCH

1. Remove:
   - clutch cover ①

NOTE:

Loosen each bolt 1/4 of a turn at a time, in stages and in a crisscross pattern. After all of the bolts are fully loosened, remove them.

2. Straighten the lock washer tab.
3. Loosen:
   - clutch boss nut ①

NOTE:

While holding the clutch boss ② with the universal clutch holder ③, loosen the clutch boss nut.

Universal clutch holder
P/N. YM-91042, 90890-04086

EBS00300

CHECKING THE FRICTION PLATES

The following procedure applies to all of the friction plates.

1. Check:
   - friction plate 1
   - friction plate 2
     Damage/wear → Replace the friction plates as a set.

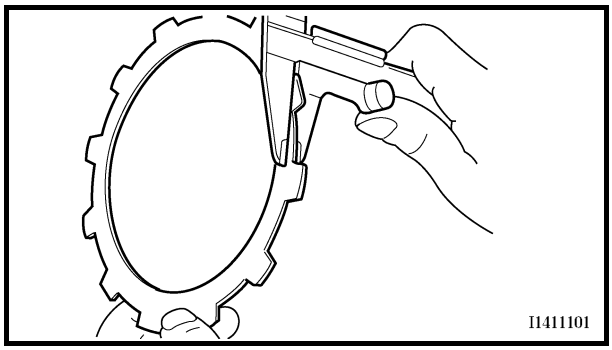

2. Measure:
   - friction plate 1 thickness
   - friction plate 2 thickness
     Out of specification → Replace the friction plates as a set.

NOTE:

Measure the friction plate at four places.

Friction plate 1 thickness
2.9 ~ 3.1 mm (0.114 ~ 0.122 in)
<Limit>: 2.8 mm (0.110 in)
Friction plate 2 thickness
2.9 ~ 3.1 mm (0.114 ~ 0.122 in)
<Limit>: 2.8 mm (0.110 in)

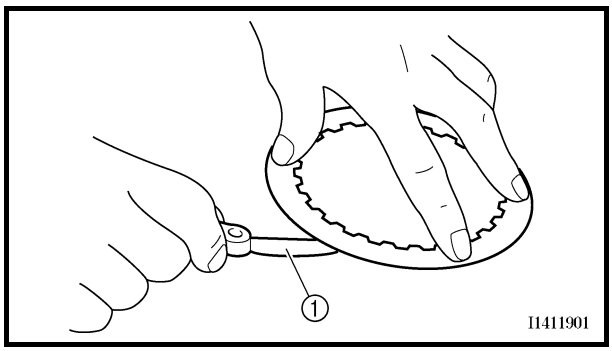

EBS00301
CHECKING THE CLUTCH PLATES

The following procedure applies to all of the clutch plates.

1. Check:
   - clutch plate
     Damage → Replace the clutch plates as a set.
2. Measure:
   - clutch plate warpage
     (with a surface plate and thickness gauge ①)
     Out of specification → Replace the clutch plates as a set.

Clutch plate warpage
0.2 mm (0.0079 in)

EBS00302
CHECKING THE CLUTCH SPRINGS

The following procedure applies to all of the clutch springs.

1. Check:
   - clutch spring
     Damage → Replace the clutch springs as a set.

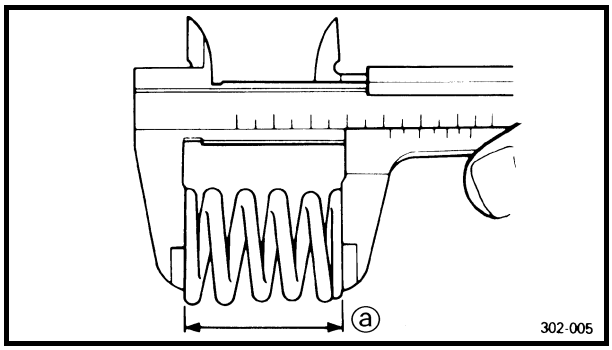

2. Measure:
   - clutch spring free length ⓐ
     Out of specification → Replace the clutch spring as a set.

Clutch spring free length
51.8 mm (2.04 in)
<Limit>: 50.0 mm (1.97 in)

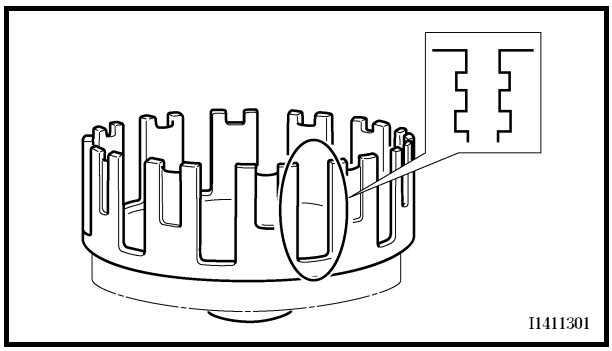

EBS00303
CHECKING THE CLUTCH HOUSING

1. Check:
   - clutch housing dogs
     Damage/pitting/wear → Deburr the clutch housing dogs or replace the clutch housing.

NOTE:
Pitting on the clutch housing dogs will cause erratic clutch operation.

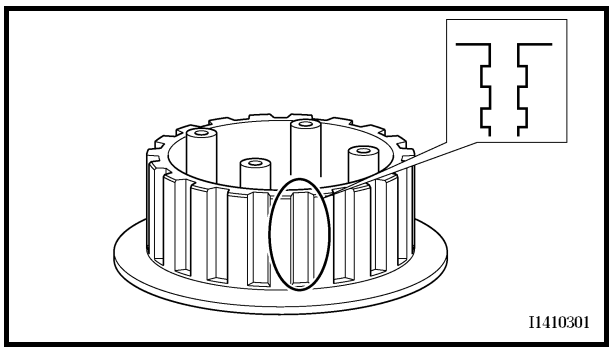

EBS00304
CHECKING THE CLUTCH BOSS
1. Check:
   - clutch boss splines
     Damage/pitting/wear → Replace the clutch boss.

NOTE:
Pitting on the clutch boss splines will cause erratic clutch operation.

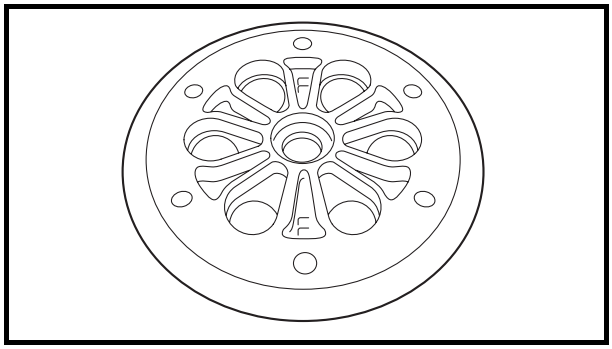

EBS00305
CHECKING THE PRESSURE PLATE
1. Check:
   - pressure plate
     Cracks/damage → Replace.

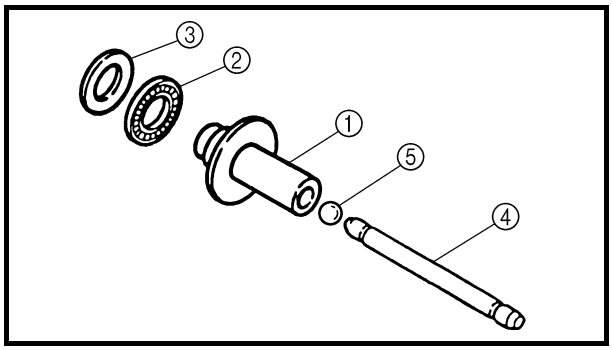

CHECKING THE PUSH RODS
1. Check:
   - push rod 1 ①
   - bearing ②
   - plain washer ③
   - push rod 2 ④
   - ball ⑤
     Wear/damage/cracks/bend → Replace the defective part(s).

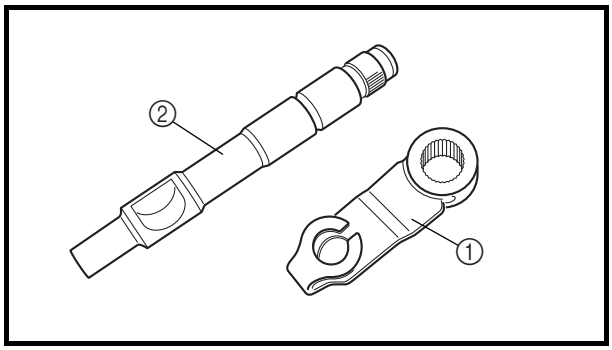

CHECKING THE PUSH LEVER
1. Check:
   - push lever ①
   - push lever shaft ②
     Damage/wear → Replace.

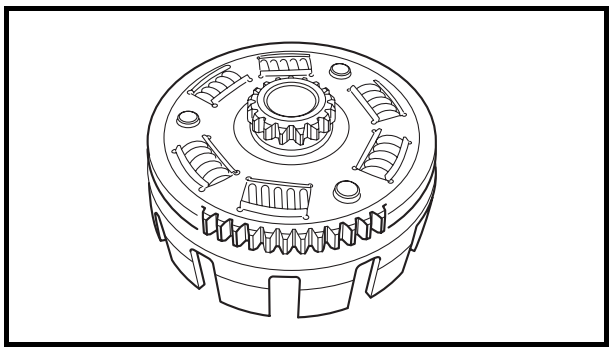

EBS00307
CHECKING THE PRIMARY DRIVEN GEAR
1. Check:
   - primary driven gear
     Damage/wear → Replace the primary drive gear and clutch housing as a set.
     Excessive noise during operation → Replace the primary drive gear and clutch housing as a set.

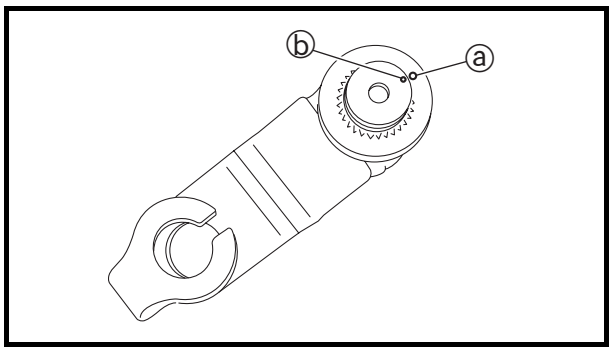

EBS00311

INSTALLING THE CLUTCH

1. Install:
   - push lever

NOTE:

Align the punch mark ⓐ on the push lever with the punch mark ⓑ on the push lever shaft.

2. Install:
   - clutch housing

NOTE:

- Make sure that the primary driven gear teeth and primary drive gear teeth mesh correctly.
- Make sure that the oil pump drive gear teeth and oil pump driven gear teeth mesh correctly.

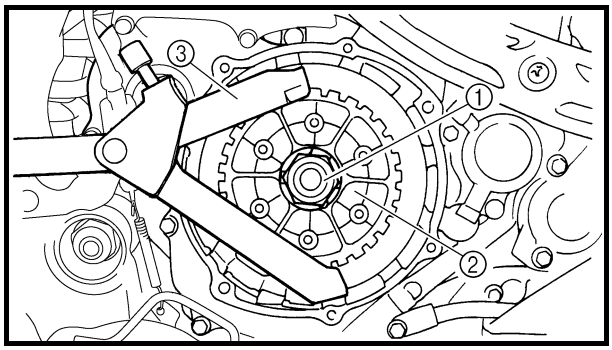

3. Tighten:
   - thrust washer
   - clutch boss
   - lock washer New
   - clutch boss nut ①

75 Nm (7.5 m · kg, 54 ft · lb)

NOTE:

While holding the clutch boss ② with the universal clutch holder ③, tighten the clutch boss nut.

Universal clutch holder
P/N. YM-91042, 90890-04086

4. Bend the lock washer tab along a flat side of the nut.

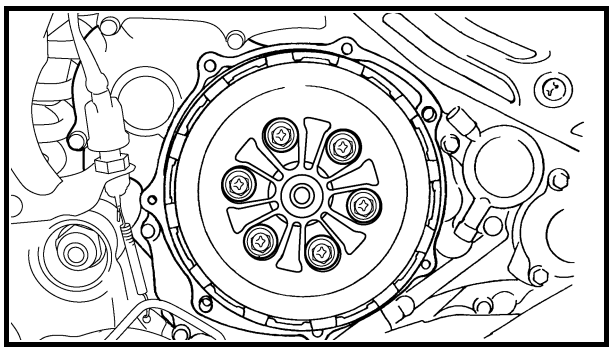

5. Install:
   - clutch spring **8 Nm (0.8 m · kg, 5.8 ft · lb)**

NOTE:

Tighten the bolts in stages, using a crisscross pattern.

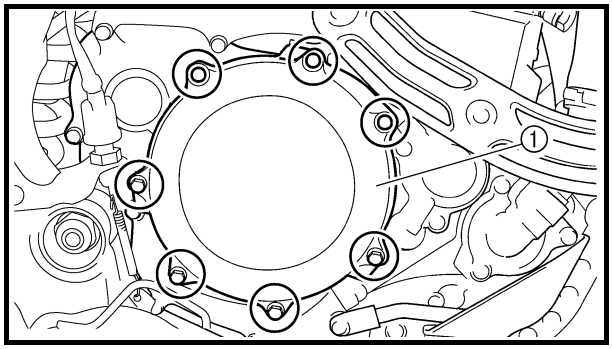

6. Install:
   - clutch cover ①

10 Nm (1.0 m · kg, 7.2 ft · lb)

NOTE:
Tighten the bolts in stages, using a crisscross pattern.

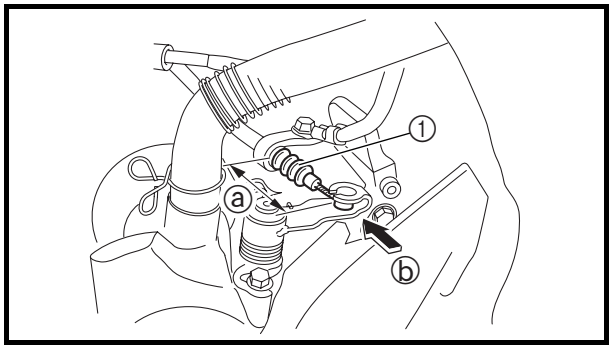

7. Install:
   - clutch cable ①
8. Check:
   - clutch cable length ⓐ
     Out of specification → Adjust.

NOTE:
Push the push lever in direction ⓑ and check the cable length ⓐ.

Clutch cable length
38.0 ~ 45.2 mm (1.50 ~ 1.78 in)

9. Adjust:
   - clutch cable length

▼▼▼▼▼▼▼▼▼▼▼▼▼▼▼▼▼▼▼▼▼▼▼▼▼▼▼▼▼▼▼▼▼▼

a. Remove the circlip and washer.
b. Remove the push lever.
c. Install the push lever so that the clutch cable length is within specification.
d. Install the washer and a new circlip.

▲▲▲▲▲▲▲▲▲▲▲▲▲▲▲▲▲▲▲▲▲▲▲▲▲▲▲▲▲▲▲▲▲▲

BALANCER

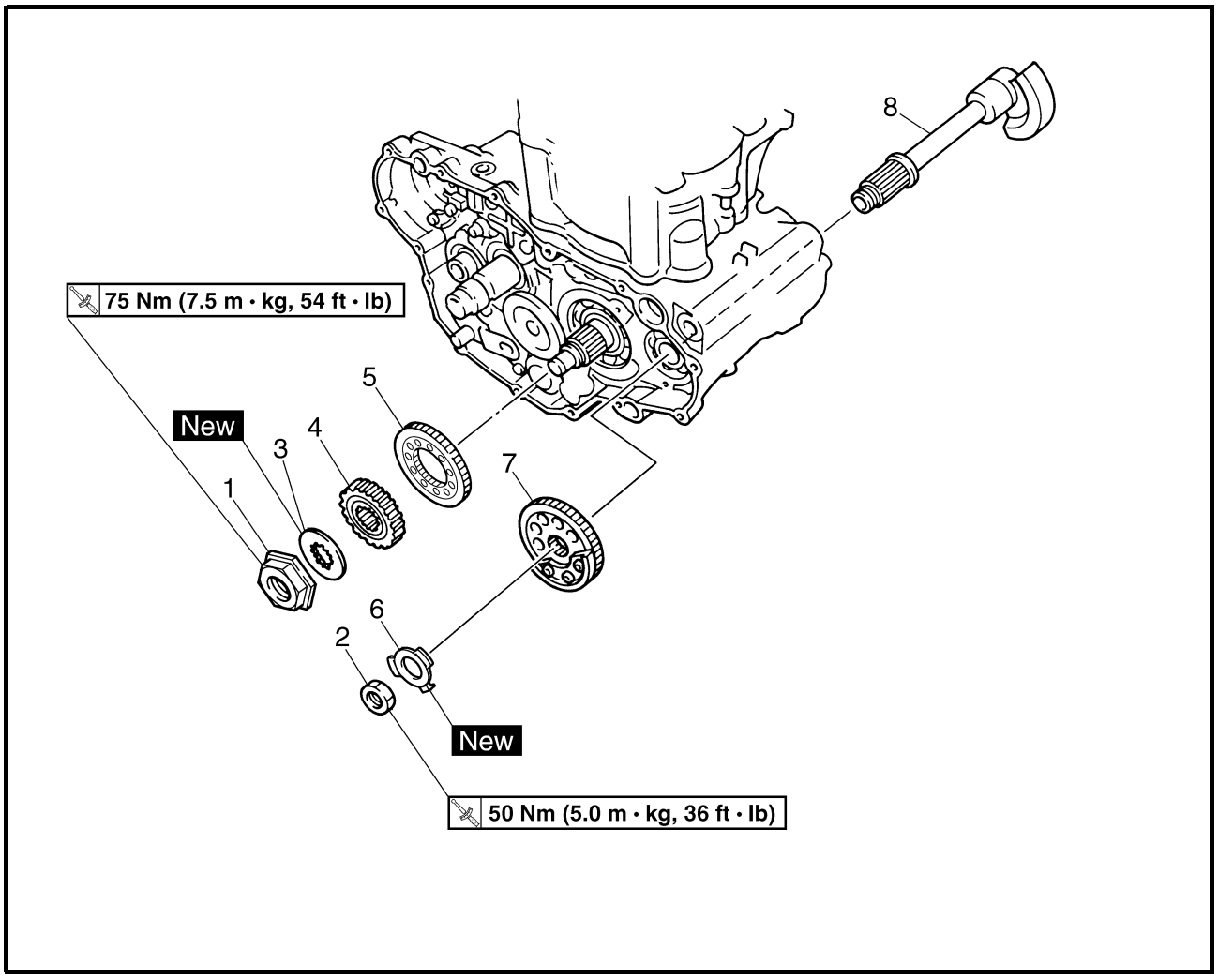

Order	Job/Part	Q'ty	Remarks
	Removing the balancer		Remove the parts in the order listed.
	Clutch housing		Refer to "CLUTCH".
	Right crankcase cover		Refer to "WATER PUMP" in chapter 5.
	A.C. magneto rotor		Refer to "A.C. MAGNETO".
1	Primary drive gear nut	1	Refer to "REMOVING THE BALANCER DRIVE GEAR AND BALANCER DRIVEN GEAR" and "INSTALLING THE BALANCER DRIVE GEAR AND BALANCER DRIVEN GEAR".
2	Balancer driven gear nut	1	
3	Lock washer	1	
4	Primary drive gear	1	
5	Balancer drive gear	1	
6	Lock washer	1	
7	Balancer driven gear	1	
8	Balancer	1	
			For installation, reverse the removal procedure.

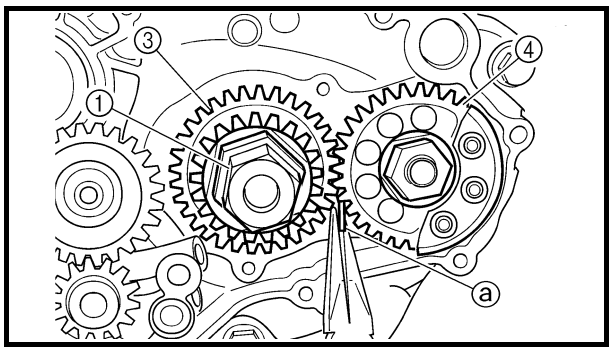

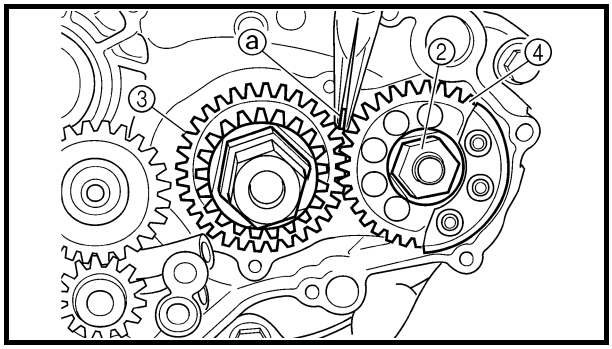

REMOVING THE BALANCER DRIVE GEAR AND BALANCER DRIVEN GEAR

1. Straighten the lock washer tab.
2. Loosen:
   - primary drive gear nut ①
   - balancer driven gear nut ②

NOTE:

Place an aluminum plate ⓐ between the teeth of the balancer drive gear ③ and driven gear ④.

3. Remove:
   - balancer drive gear
   - balancer driven gear

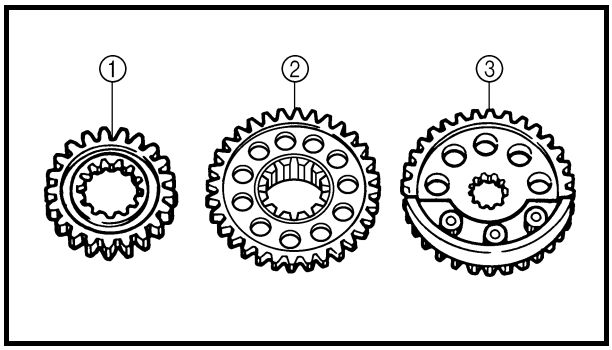

CHECKING THE PRIMARY DRIVE GEAR, BALANCER DRIVE GEAR AND BALANCER DRIVEN GEAR

1. Check:
   - primary drive gear ①
   - balancer drive gear ②
   - balancer driven gear ③
     Wear/damage → Replace.

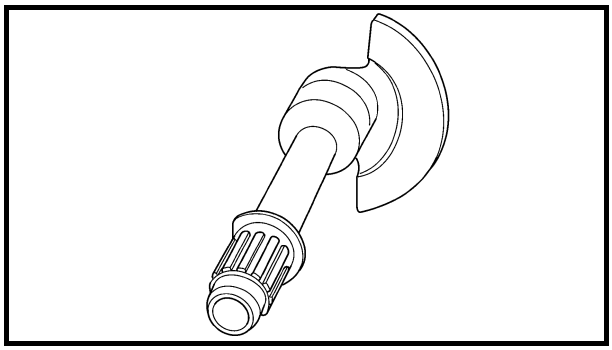

CHECKING THE BALANCER

1. Check:
   - balancer
     Cracks/damage → Replace.

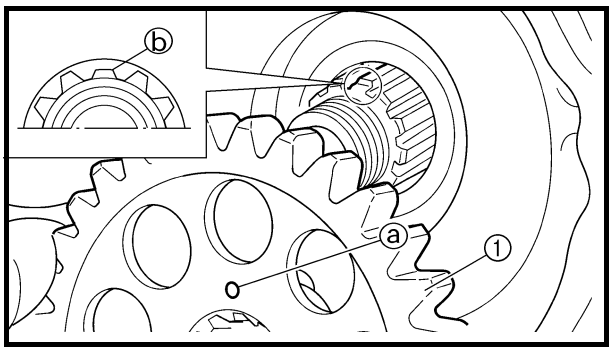

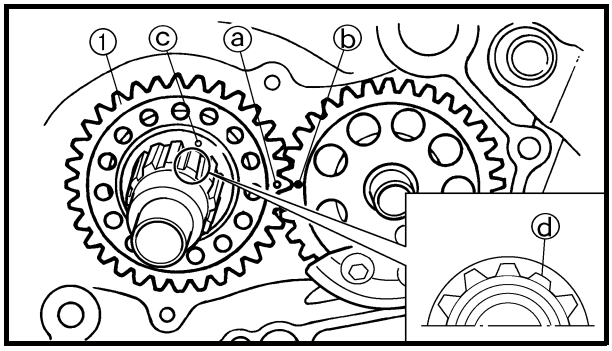

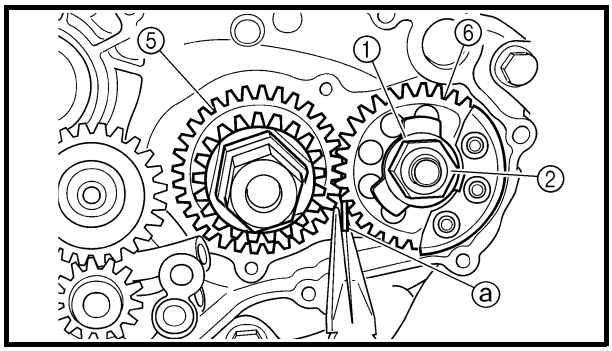

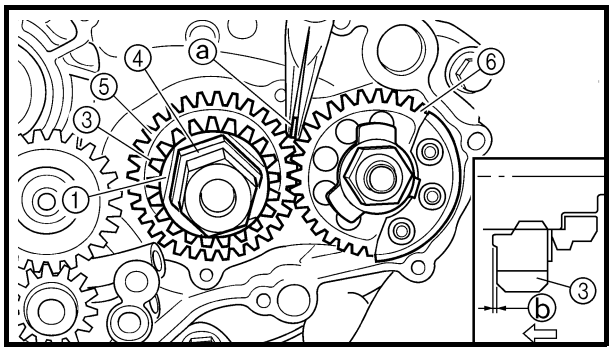

INSTALLING THE BALANCER DRIVE GEAR AND BALANCER DRIVEN GEAR

1. Install:
   - balancer driven gear ①

NOTE:

Install the balancer driven gear onto the balancer while aligning the punch mark ⓐ on the balancer driven gear with the shorter spline ⓑ on the balancer end.

2. Install:
   - balancer drive gear ①

NOTE:

- Align the punch mark ⓐ on the balancer drive gear with the punch mark ⓑ on the balancer driven gear.
- Align the punch mark ⓒ on the balancer drive gear with the shorter spline ⓓ on the crankshaft.

3. Install:
   - lock washer ① New
   - balancer driven gear nut ②

     50 Nm (5.0 m · kg, 36 ft · lb)
   - primary drive gear ③
   - primary drive gear nut ④

     75 Nm (7.5 m · kg, 54 ft · lb)

NOTE:

- Install the primary drive gear with its stepped side ⓑ facing the engine.
- Place an aluminum plate ⓐ between the teeth of the balancer drive gear ⑤ and driven gear ⑥.

4. Bend the lock washer tab.

EBS00315

OIL PUMP

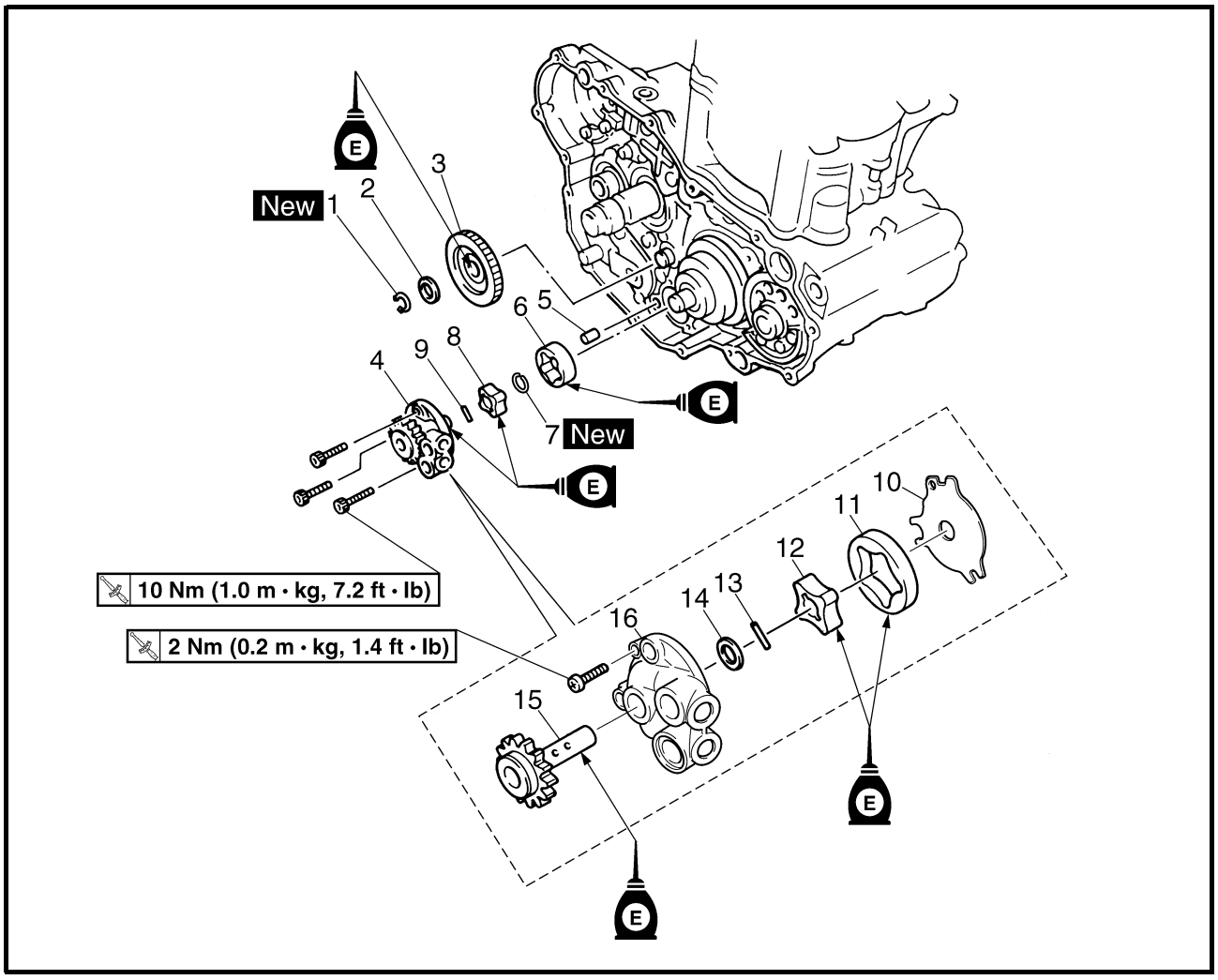

Order	Job/Part	Q'ty	Remarks
	Removing the oil pump		Remove the parts in the order listed.
	Clutch housing		Refer to "CLUTCH".
	Right crankcase cover		Refer to "WATER PUMP" in chapter 5.
1	Circlip	1	
2	Washer	1	
3	Oil pump drive gear	1	
4	Oil pump assembly	1	
5	Dowel pin	1	
6	Outer rotor 2	1	
7	Circlip	1	
8	Inner rotor 2	1	

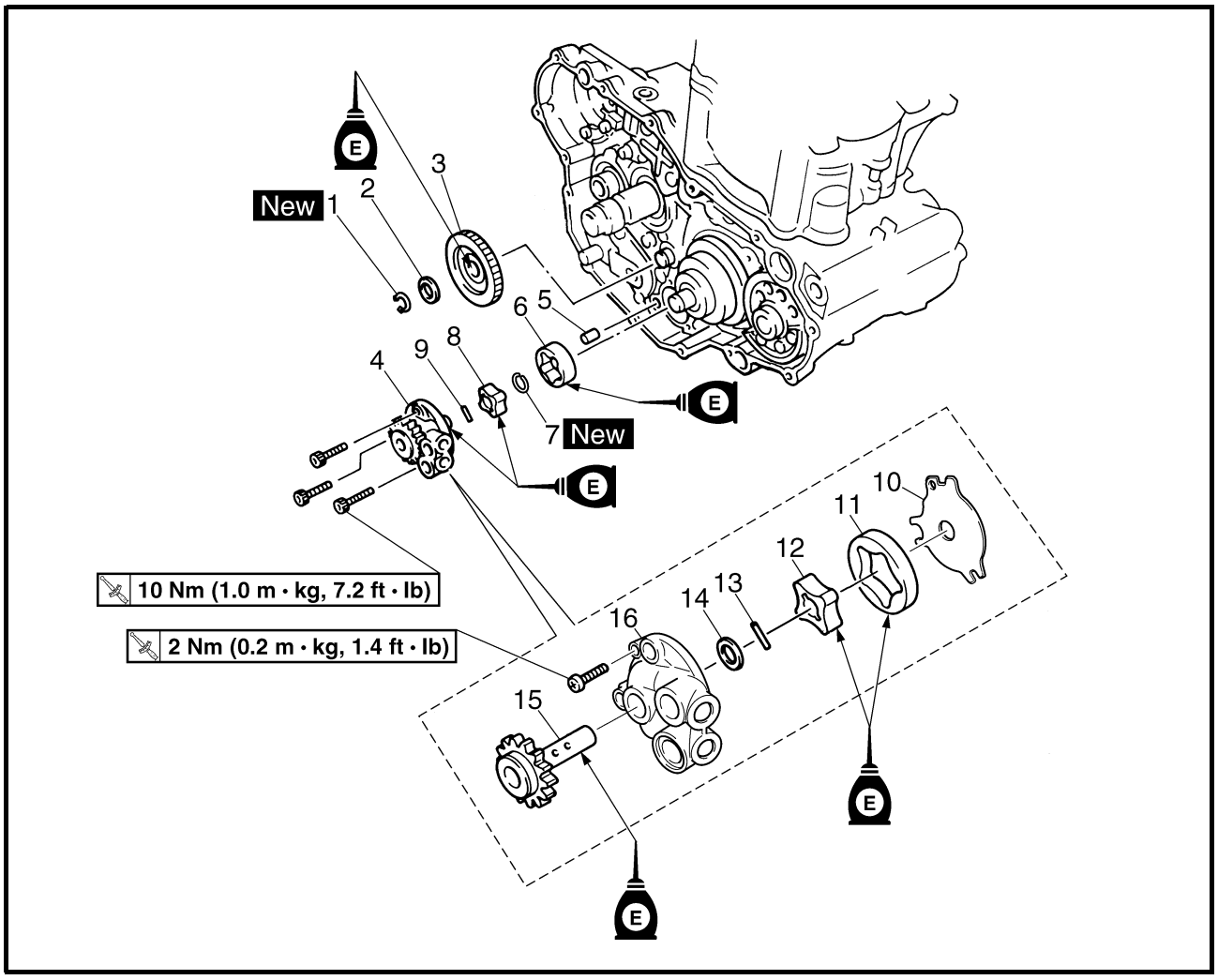

Order	Job/Part	Q'ty	Remarks
9	Pin	1	
10	Oil pump housing cover	1	
11	Outer rotor 1	1	
12	Inner rotor 1	1	
13	Pin	1	
14	Washer	1	
15	Oil pump driven gear	1	
16	Oil pump housing	1	
			For installation, reverse the removal procedure.

EBS00317

CHECKING THE OIL PUMP

1. Check:
   - oil pump drive gear
   - oil pump driven gear
   - oil pump housing
   - oil pump housing cover

   Cracks/wear/damage → Replace.

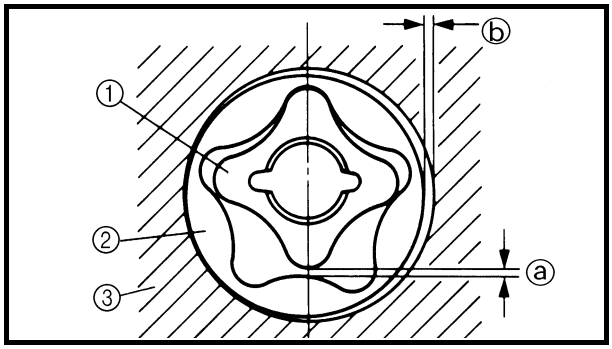

2. Measure:
   - inner-rotor-to-outer-rotor-tip clearance ⓐ
   - outer-rotor-to-oil-pump-housing clearance ⓑ

   Out of specification → Replace the oil pump.

① inner rotor
② outer rotor
③ oil pump housing

Inner-rotor-to-outer-rotor-tip clearance
0.07 ~ 0.12 mm
(0.0028 ~ 0.0047 in)
<Limit>: 0.20 mm (0.0079 in)
Outer-rotor-to-oil-pump-housing clearance
0.09 ~ 0.17 mm
(0.0035 ~ 0.0067 in)
<Limit>: 0.24 mm (0.0094 in)

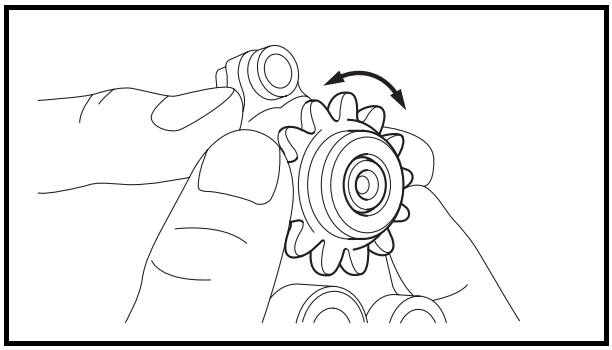

3. Check:
   - oil pump operation

   Unsmooth → Repeat steps (1) and (2) or replace the defective parts.

SHIFT SHAFT

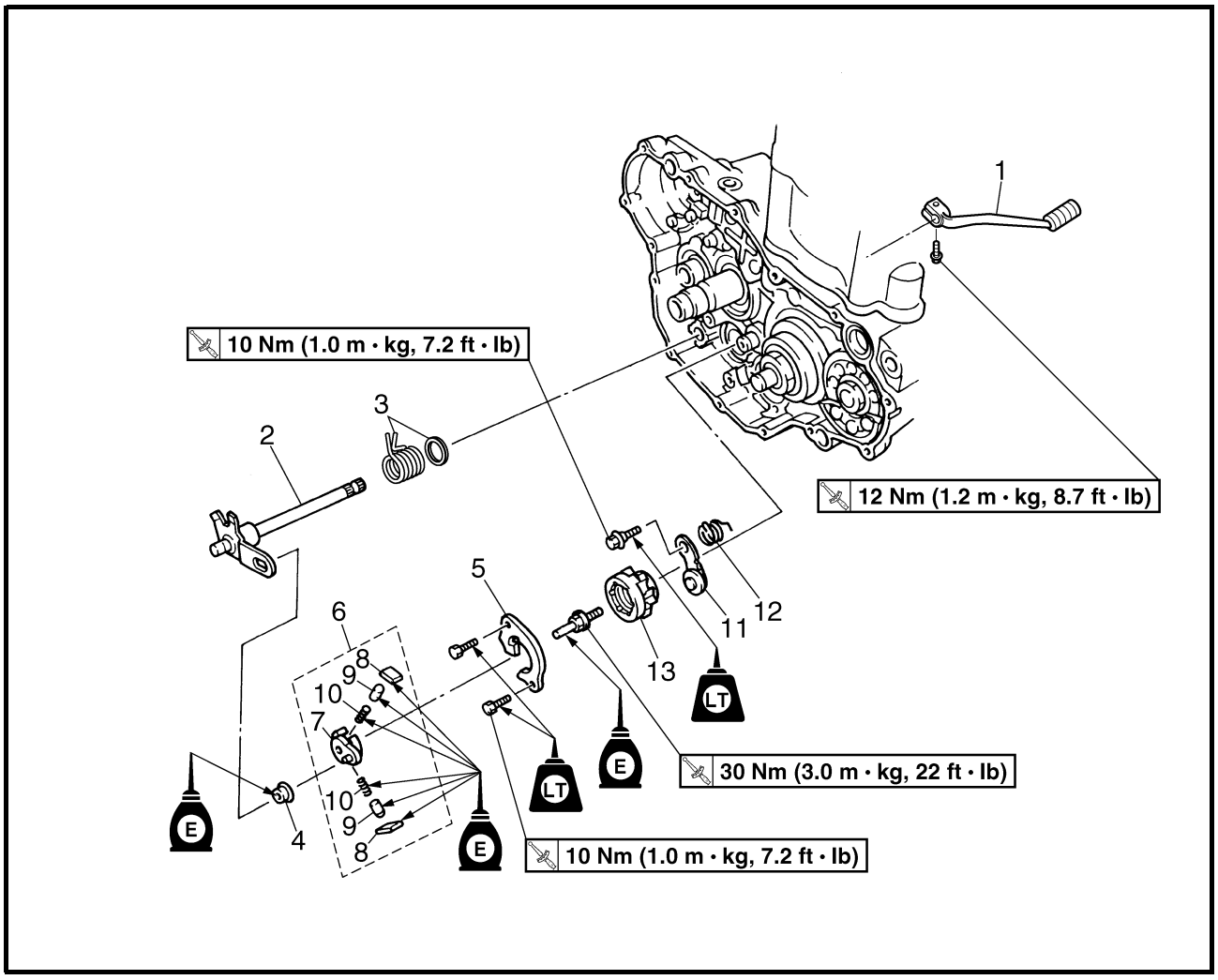

Order	Job/Part	Q'ty	Remarks
	Removing the shift shaft		Remove the parts in the order listed.
	Clutch		Refer to "CLUTCH".
	Oil pump drive gear		Refer to "OIL PUMP".
1	Shift pedal	1	Refer to "INSTALLING THE SHIFT SHAFT".
2	Shift shaft	1	
3	Shift shaft spring/washer	1/1	
4	Roller	1	Refer to "INSTALLING THE SHIFT LEVER".
5	Shift guide	1	
6	Shift lever assembly	1	
7	Pawl holder	1	
8	Pawl	2	
9	Pawl pin	2	
10	Spring	2	

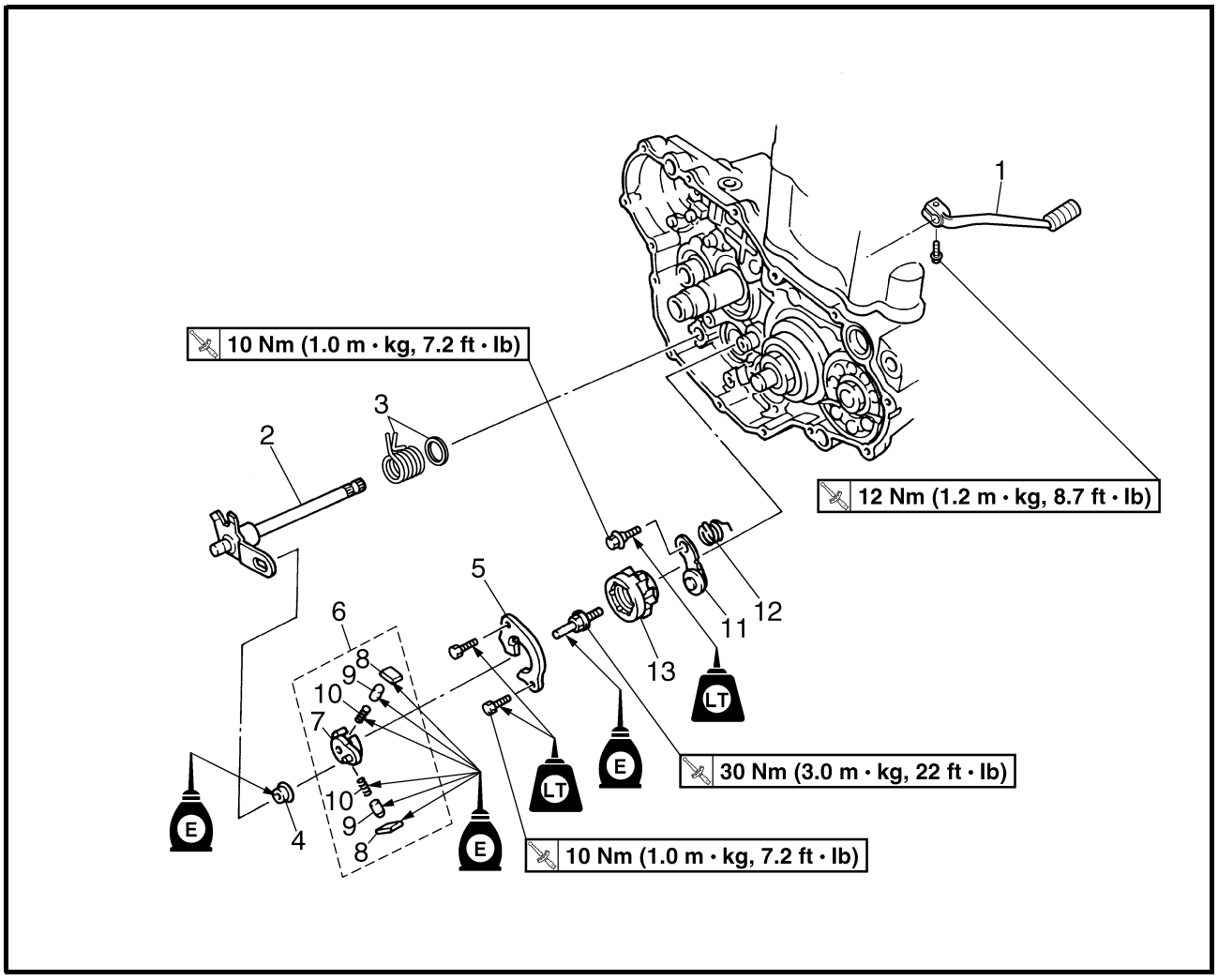

Order	Job/Part	Q'ty	Remarks
11	Stopper lever	1	Refer to "INSTALLING THE SHIFT LEVER".
12	Stopper lever spring	1	
13	Shift drum segment	1	
			For installation, reverse the removal procedure.

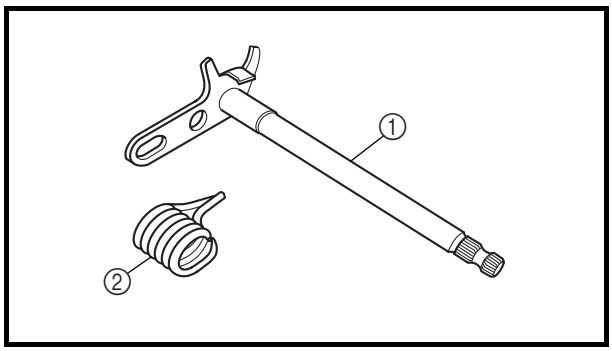

EBS01018
CHECKING THE SHIFT SHAFT
1. Check:
   - shift shaft ①
     Bends/damage/wear → Replace.
   - shift shaft spring ②
     Damage/wear → Replace.

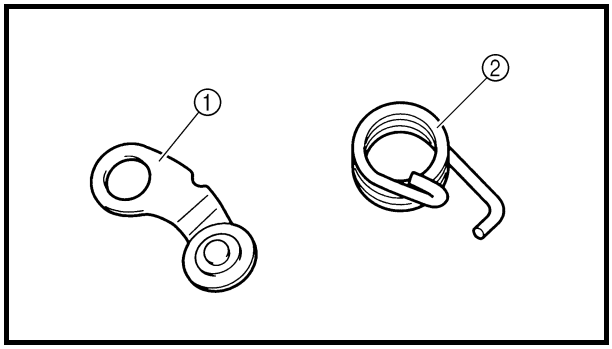

EBS01019
CHECKING THE STOPPER LEVER
1. Check:
   - stopper lever ①
     Bends/damage → Replace.
     Roller turns roughly → Replace the stopper lever.
   - stopper spring ②
     Damage/wear → Replace.

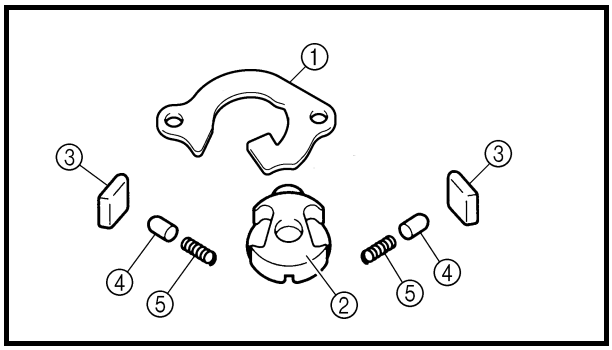

EBS00359
CHECKING THE SHIFT GUIDE AND SHIFT LEVER
1. Check:
   - shift guide ①
   - pawl holder ②
   - pawls ③
   - pawl pins ④
   - springs ⑤
     Wear/cracks/damage → Replace.

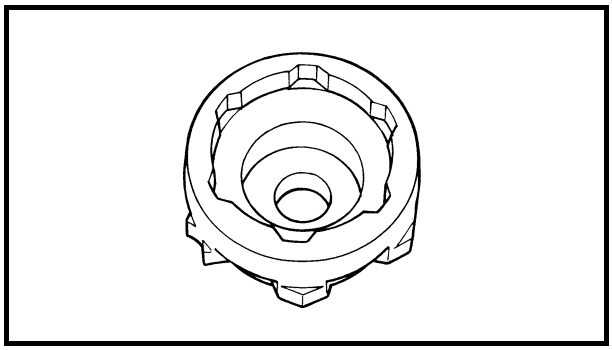

CHECKING THE SHIFT DRUM SEGMENT
1. Check:
   - shift drum segment
     Damage/wear → Replace.

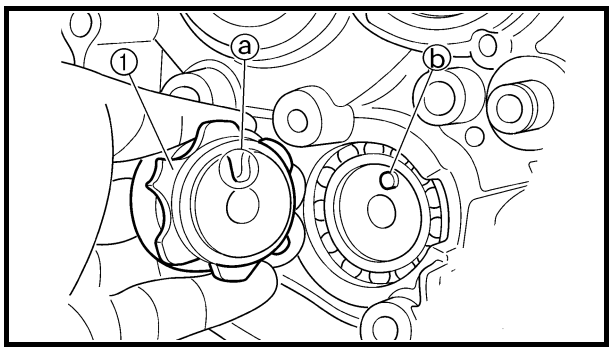

INSTALLING THE SHIFT LEVER
1. Install:
   - shift drum segment ①
   - shift drum segment bolt

	30 Nm (3.0 m · kg, 22 ft · lb)

NOTE:
Align the notch ⓐ on the shift drum segment with the pin ⓑ on the shift drum.

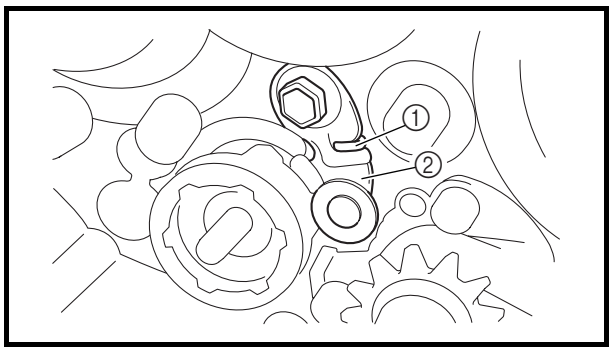

2. Install:
   - stopper lever spring ①
   - stopper lever ②

   10 Nm (1.0 m · kg, 7.2 ft · lb)

NOTE:
Align the stopper lever roller with a slot on the shift drum segment.

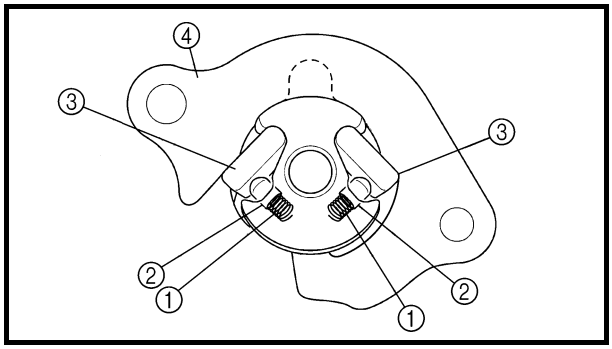

3. Install:
   - springs ①
   - pawl pins ②
   - pawls ③
   - shift guide ④ **10 Nm (1.0 m · kg, 7.2 ft · lb)**
     (to the pawl holder)

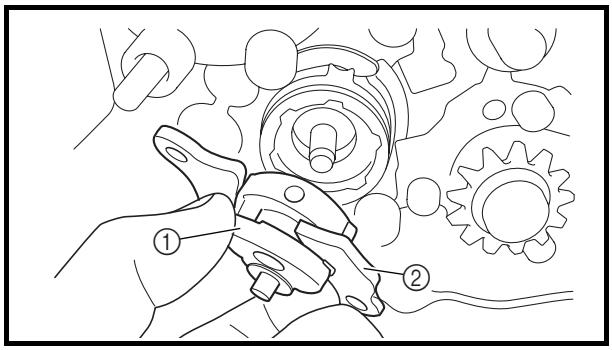

4. Install:
   - shift lever assembly ①
   - shift guide ② **10 Nm (1.0 m · kg, 7.2 ft · lb)**

NOTE:
The shift lever assembly is installed at the same time as the shift guide.

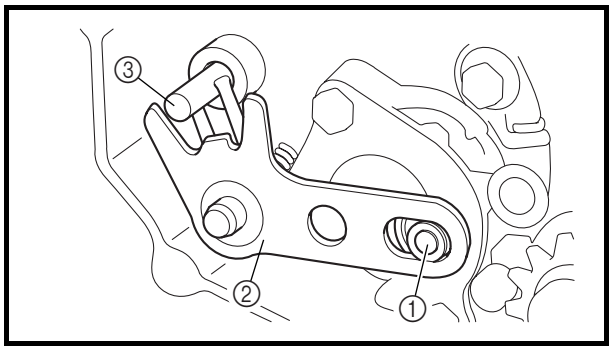

INSTALLING THE SHIFT SHAFT

1. Install:
   - roller ①
   - shift shaft spring
   - shift shaft ②

NOTE:
- Install the end of the shift shaft spring onto the shift shaft spring stopper ③.
- Install the end of the shift shaft lever onto the roller ①.

2. Install:
   - shift pedal **12 Nm (1.2 m · kg, 8.7 ft · lb)**
3. Adjust:
   - shift pedal height
     Refer to “ADJUSTING THE SHIFT PEDAL” in chapter 3.

EBS00320

CRANKCASE

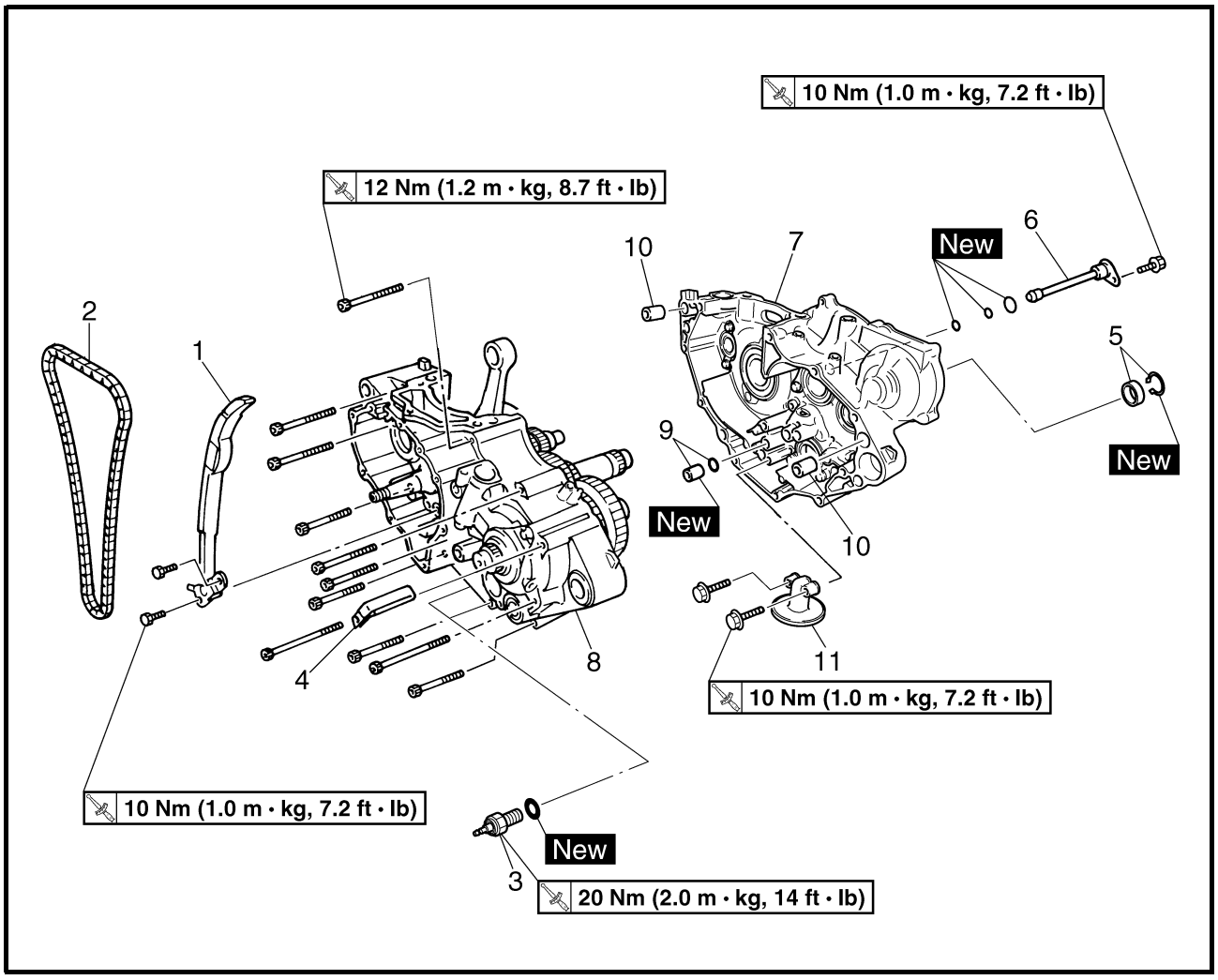

Order	Job/Part	Q'ty	Remarks
	Separating the crankcase		Remove the parts in the order listed.
	Engine assembly		Refer to "ENGINE REMOVAL".
	Camshafts		Refer to "CAMSHAFTS".
	Cylinder head		Refer to "CYLINDER HEAD".
	A.C. magneto		Refer to "A.C. MAGNETO".
	Clutch		Refer to "CLUTCH".
	Balancer		Refer to "BALANCER".
	Oil pump		Refer to "OIL PUMP".
	Shift drum segment		Refer to "SHIFT SHAFT".
	Starter motor		Refer to "STARTER MOTOR" in chapter 8.
1	Timing chain guide (intake side)	1	
2	Timing chain	1	
3	Neutral switch	1	
4	Hose guide	1	

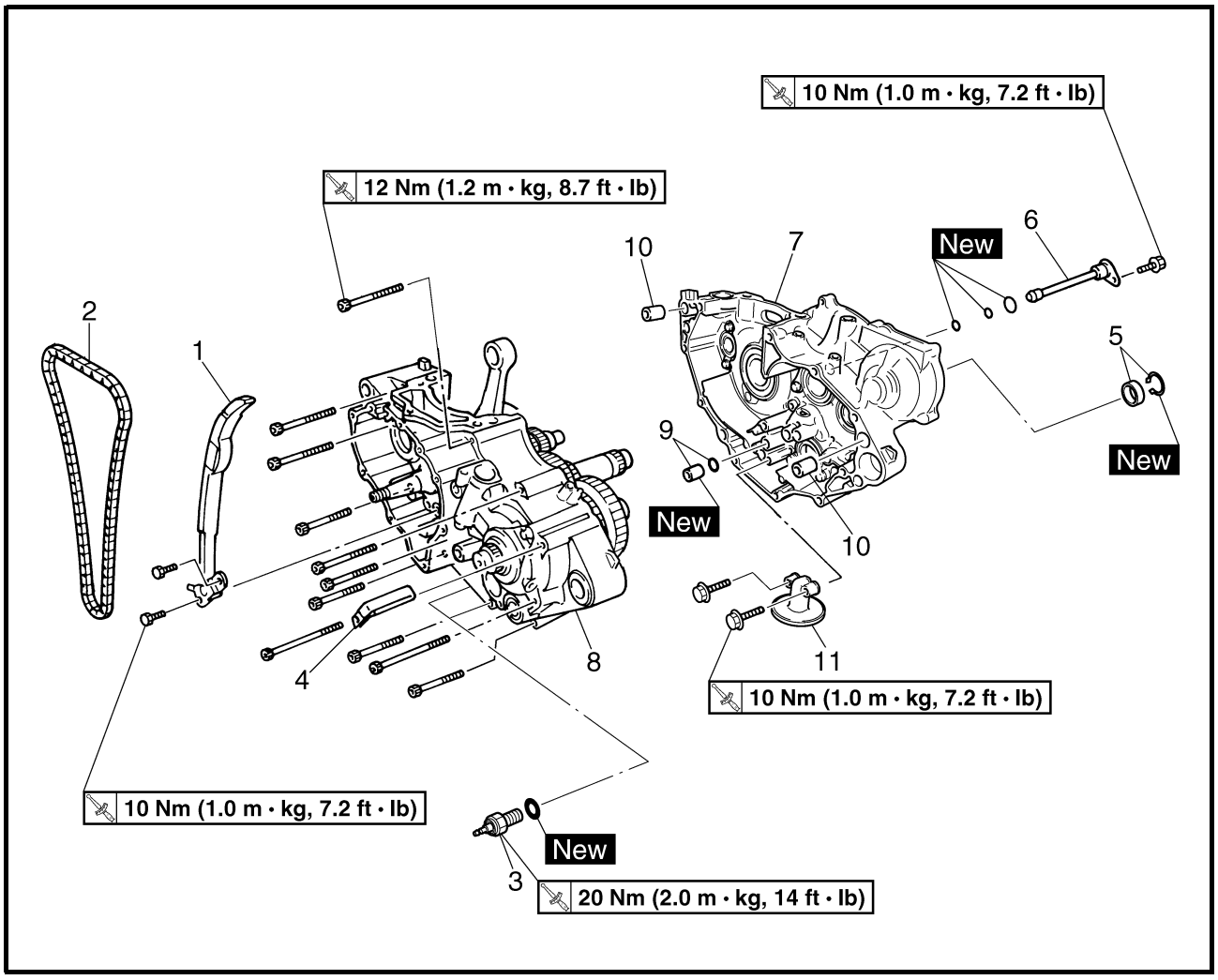

Order	Job/Part	Q'ty	Remarks
5	Circlip/spacer	1/1	
6	Oil delivery pipe 2	1	
7	Right crankcase	1	Refer to "SEPARATING THE CRANKCASE".
8	Left crankcase	1	
9	Dowel pin/O-ring	1/1	
10	Dowel pin	2	
11	Oil stainer	1	
			For installation, reverse the removal procedure.

EBS00321
OIL SEAL AND BEARING

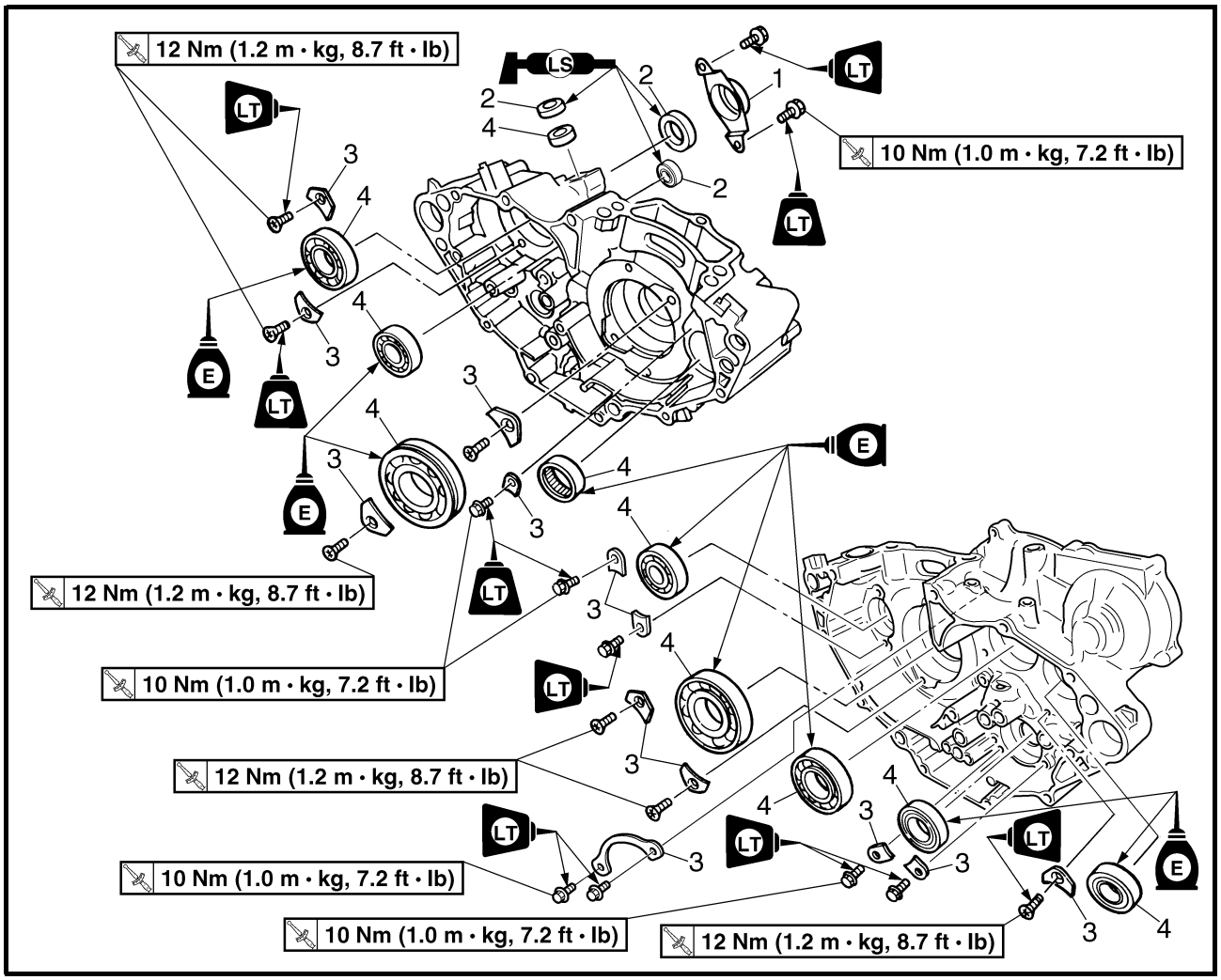

Order	Job/Part	Q'ty	Remarks
	Removing the crankcase bearings		Remove the parts in the order listed.
	Crankshaft		Refer to "CRANKSHAFT".
	Transmission		Refer to "TRANSMISSION".
1	Oil seal holder	1	
2	Oil seal	3	
3	Bearing retainer	13	
4	Bearing	10	
			For installation, reverse the removal procedure.

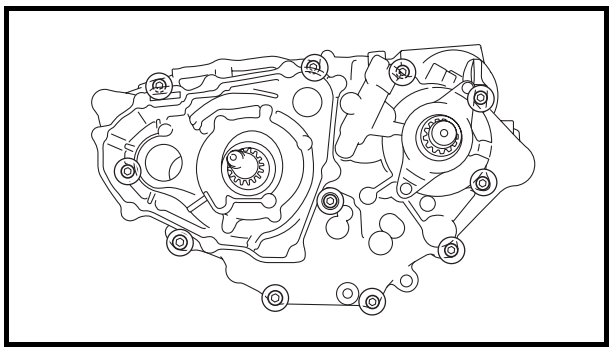

EBS00332

SEPARATING THE CRANKCASE

1. Separate:
   - right crankcase
   - left crankcase

▼▼▼▼▼▼▼▼▼▼▼▼▼▼▼▼▼▼▼▼▼▼▼▼▼▼▼▼▼▼▼▼▼▼▼▼▼▼

a. Remove the crankcase bolts.

NOTE:

- Loosen each bolt 1/4 of a turn at a time and after all the bolts are loosened, remove them.
- Loosen the bolts in stages, using a criss-cross pattern.

Left crankcase

b. Remove the right crankcase.

NOTE:

Insert a screwdriver or pry bar into the pry points in the crankcase and then carefully pry apart the crankcase halves.

CAUTION:

Use a soft hammer to tap on one side of the crankcase. Tap only on reinforced portions of the crankcase. Do not tap on the crankcase mating surfaces. Work slowly and carefully. Make sure that the crankcase halves separate evenly.

c. Remove the dowel pins and O-ring.

▲▲▲▲▲▲▲▲▲▲▲▲▲▲▲▲▲▲▲▲▲▲▲▲▲▲▲▲▲▲▲▲▲▲▲▲▲▲

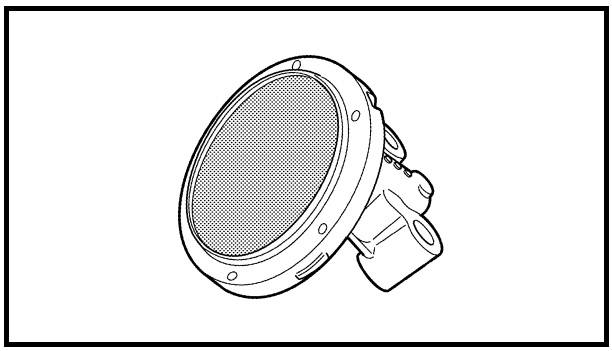

EBS00325

CHECKING THE OIL STRAINER AND OIL DELIVERY PIPE 2

1. Check:
   - oil strainer
     Damage → Replace.
     Contaminants → Clean with engine oil

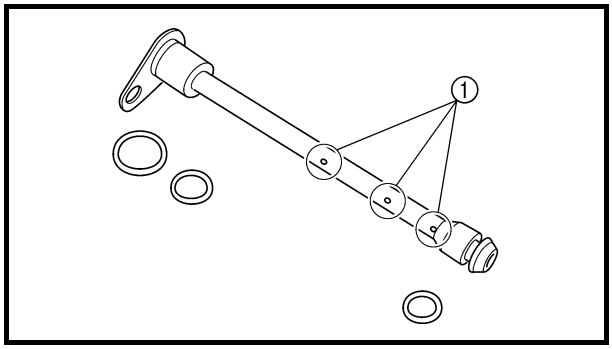

2. Check:
   - oil delivery pipe 2
     Cracks/damage → Replace.
   - oil delivery pipe holes ①
     Clogged → Blow out with compressed air.

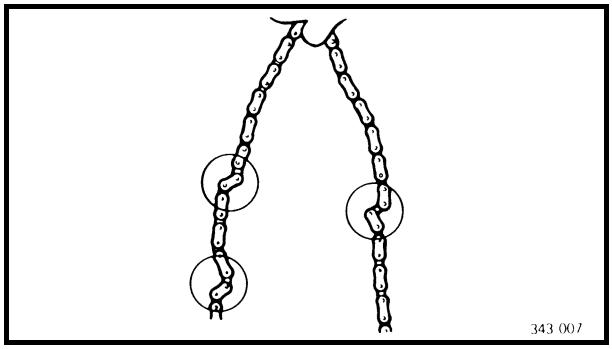

EBS00335

CHECKING THE TIMING CHAIN AND GUIDE

1. Check:
   - timing chain
     Cracks/stiffness → Replace the timing chain and camshaft as a set.
2. Check:
   - timing chain guide (intake side)
     Wear/damage → Replace.

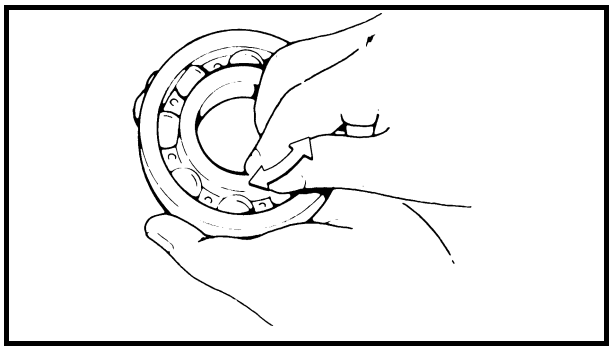

EBS00339

CHECKING THE BEARINGS AND OIL SEALS

1. Check:
   - bearings
     Clean and lubricate, then rotate the inner race with a finger.
     Roughness → Replace.
2. Check:
   - oil seals
     Damage/wear → Replace.

EBS00338

CHECKING THE CRANKCASE

1. Thoroughly wash the case halves in a mild solvent.
2. Clean all the gasket mating surfaces and crankcase mating surfaces thoroughly.
3. Check:
   - crankcase
     Cracks/damage → Replace.
   - oil delivery passages
     Clogged → Blow out with compressed air.

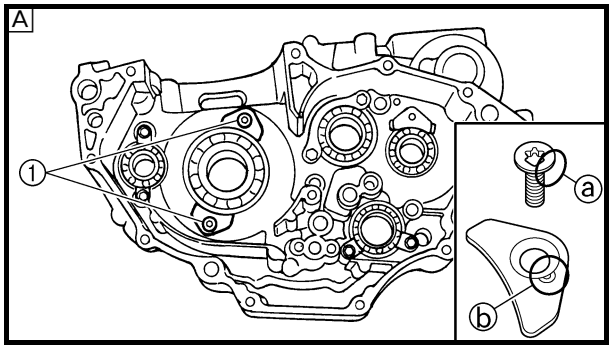

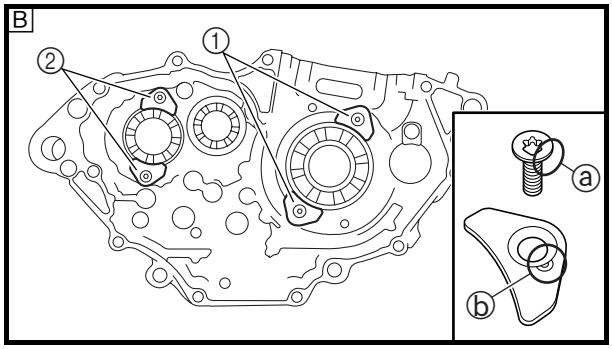

EBS00342

ASSEMBLING THE CRANKCASE

1. Install:
   - bearing New
   - bearing retainer
   - bolt (bearing retainer)

     10 Nm (1.0 m · kg, 7.2 ft · lb)
   - screw [bearing retainer (crankshaft)] ①

     12 Nm (1.2 m · kg, 8.7 ft · lb)
   - screw [bearing retainer (drive axle)] ②

     12 Nm (1.2 m · kg, 8.7 ft · lb)

NOTE:

- Install the bearing by pressing its outer race evenly.
- To prevent the screws [bearing retainer (crankshaft)] from becoming loose, flatten the edge ⓐ of each screw into the depression ⓑ using a punch, etc. Be careful not to damage the hole for the screwdriver in the screw head.

A Right crankcase
B Left crankcase

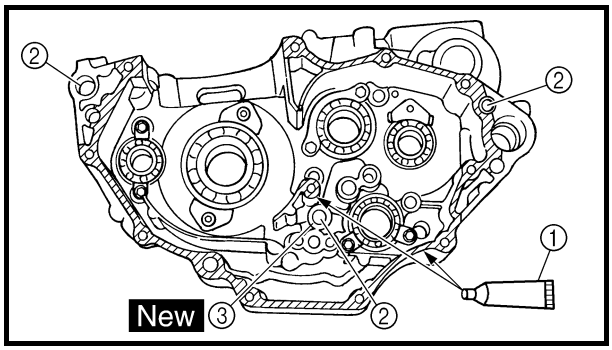

2. Apply:
   - sealant (Quick Gasket®) or Yamaha bond No. 1215 ①
     (to the mating surfaces of both case halves)

Sealant (Quick Gasket®)
ACC-11001-05-01
Yamaha bond No. 1215
90890-85505

3. Install:
   - dowel pins ②
   - O-ring ③ New

4. Fit the right crankcase onto the left crankcase. Tap lightly on the case with a soft hammer.

CAUTION:

Before installing and torquing the crankcase holding bolts, be sure to check whether the transmission is functioning properly by manually rotating the shift drum in both directions.

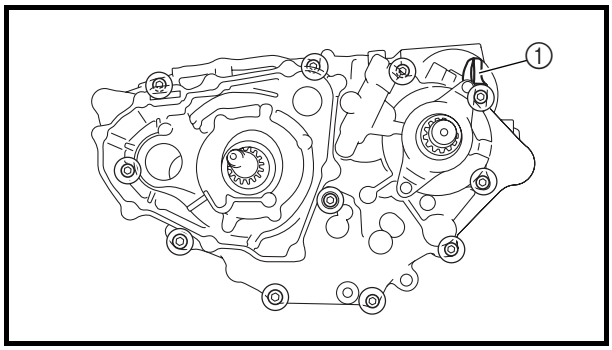

5. Install:
   - hose guide ①
   - crankcase bolts
6. Tighten:
   - crankcase bolts
     (follow the proper tightening sequence)

	12 Nm (1.2 m · kg, 8.7 ft · lb)

NOTE:

Tighten the bolts in stages, using a crisscross pattern.

7. Apply:
   - 4-stroke engine oil
     (to the crankshaft pin, bearing and oil delivery hole)
8. Check:
   - crankshaft and transmission operation
     Unsmooth operation → Repair.

CRANKSHAFT

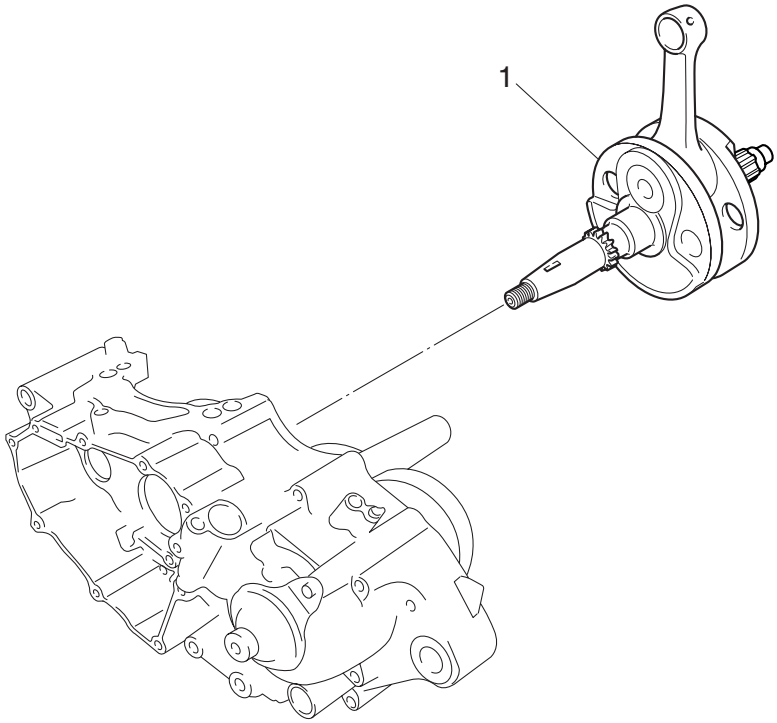

Order	Job/Part	Q'ty	Remarks
	Removing the crankshaft		Remove the parts in the order listed.
	Crankcase		Separate. Refer to "CRANKCASE".
1	Crankshaft	1	Refer to "REMOVING THE CRANKSHAFT" and "INSTALLING THE CRANKSHAFT". For installation, reverse the removal procedure.

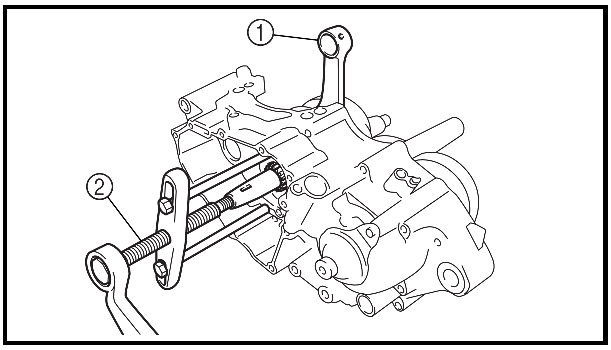

EBS00337

REMOVING THE CRANKSHAFT

1. Remove:
   - crankshaft ①

     Use a crankcase separating tool ②.

	Crankcase separating tool **P/N. YU-01135-A, 90890-01135**

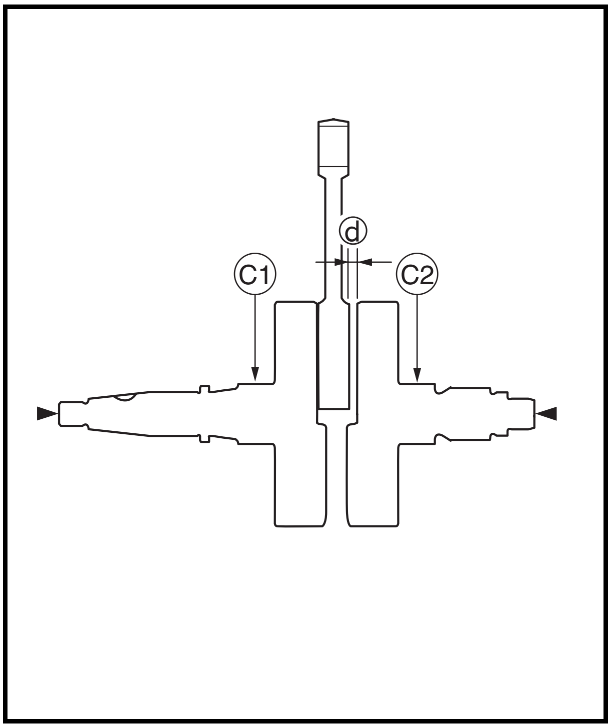

EBS00360

CHECKING THE CRANKSHAFT

1. Measure:
   - side clearance ⓓ

     Out of specification → Replace the crankshaft.

	Big end side clearance **0.15 ~ 0.45 mm** **(0.0059 ~ 0.0177 in)** **<Limit>: 0.50 mm (0.0197 in)**

2. Measure:
   - runout ⓒ

     Out of specification → Replace the crankshaft.

	Runout limit **C1: 0.05 mm (0.002 in)** **C2: 0.05 mm (0.002 in)**

▼▼▼▼▼▼▼▼▼▼▼▼▼▼▼▼▼▼▼▼▼▼▼▼▼▼▼▼▼▼▼▼▼▼

a. The crankshaft ① and the crankshaft pin ② oil passages must be properly interconnected with a tolerance of less than 1 mm (0.04 in).

▲▲▲▲▲▲▲▲▲▲▲▲▲▲▲▲▲▲▲▲▲▲▲▲▲▲▲▲▲▲▲▲▲▲

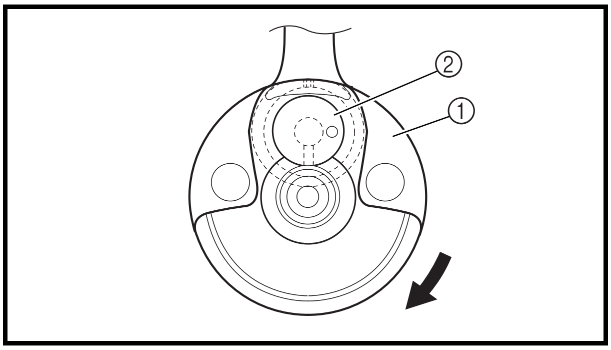

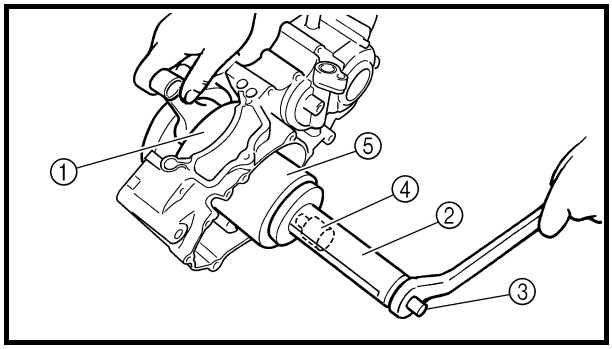

INSTALLING THE CRANKSHAFT

1. Install:
   - crankshaft ①

Crankshaft installer pot ②
P/N. 90890-01274
Crankshaft installer bolt ③
P/N. 90890-01275
Crankshaft installer set
P/N. YU-90050
Adapter ④
P/N. YM-90063, 90890-01278
Spacer (crankshaft installer) ⑤
P/N. YM-91044, 90890-04081

NOTE:

Hold the connecting rod at the Top Dead Center (TDC) with one hand while turning the nut of the installing tool with the other. Operate the installing tool until the crankshaft bottoms against the bearing.

CAUTION:

Apply engine oil to each bearing to protect the crankshaft against scratches and to make installation easier.

EBS00345

TRANSMISSION

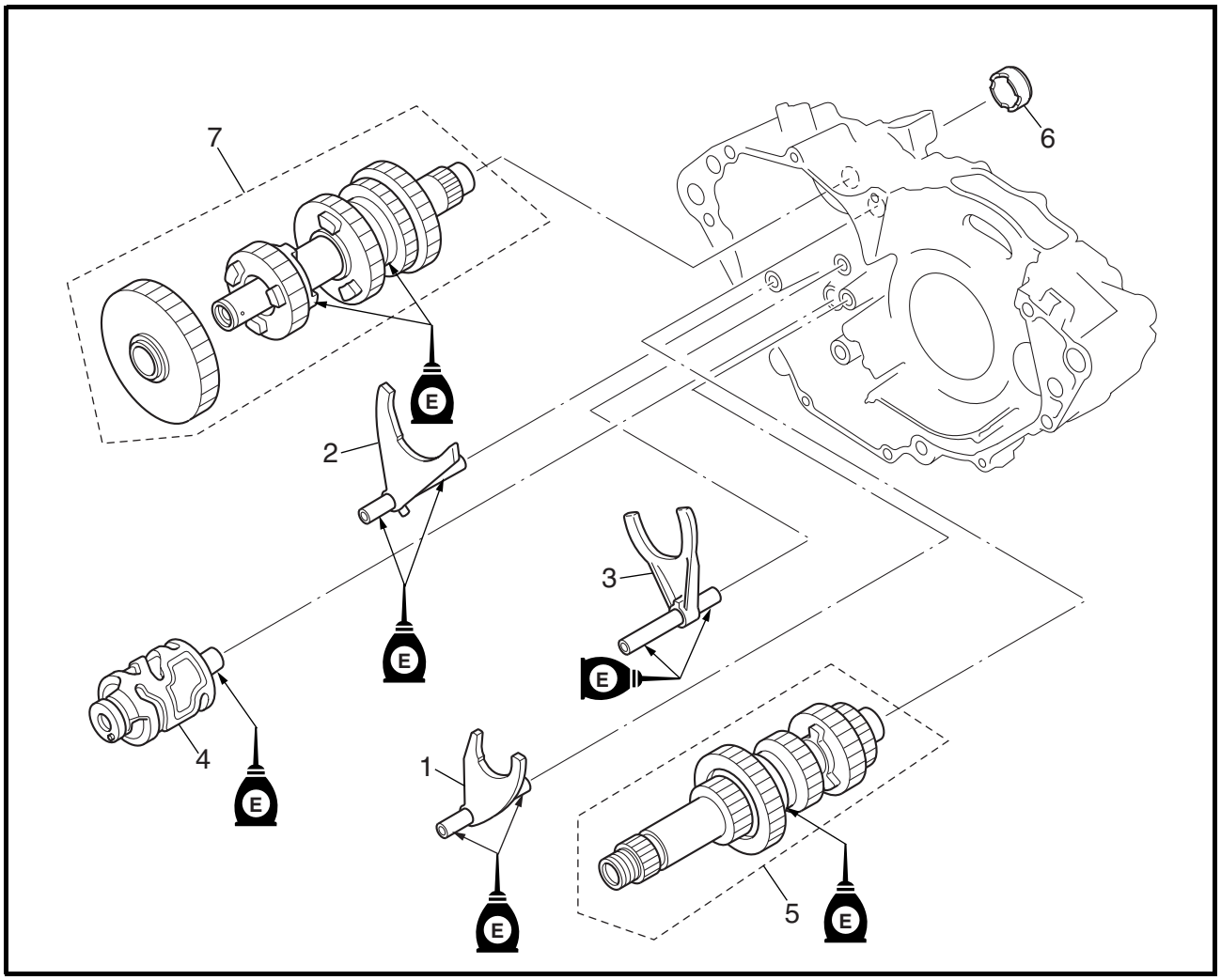

Order	Job/Part	Q'ty	Remarks
	Removing the transmission		Remove the parts in the order listed.
	Crankcase		Separate. Refer to "CRANKCASE".
1	Shift fork "C"	1	Refer to "INSTALLING THE TRANSMISSION".
2	Shift fork "R"	1	
3	Shift fork "L"	1	
4	Shift drum	1	
5	Main axle assembly	1	
6	Spacer	1	
7	Drive axle assembly	1	
			For installation, reverse the removal procedure.

EBS00347
MAIN AXLE

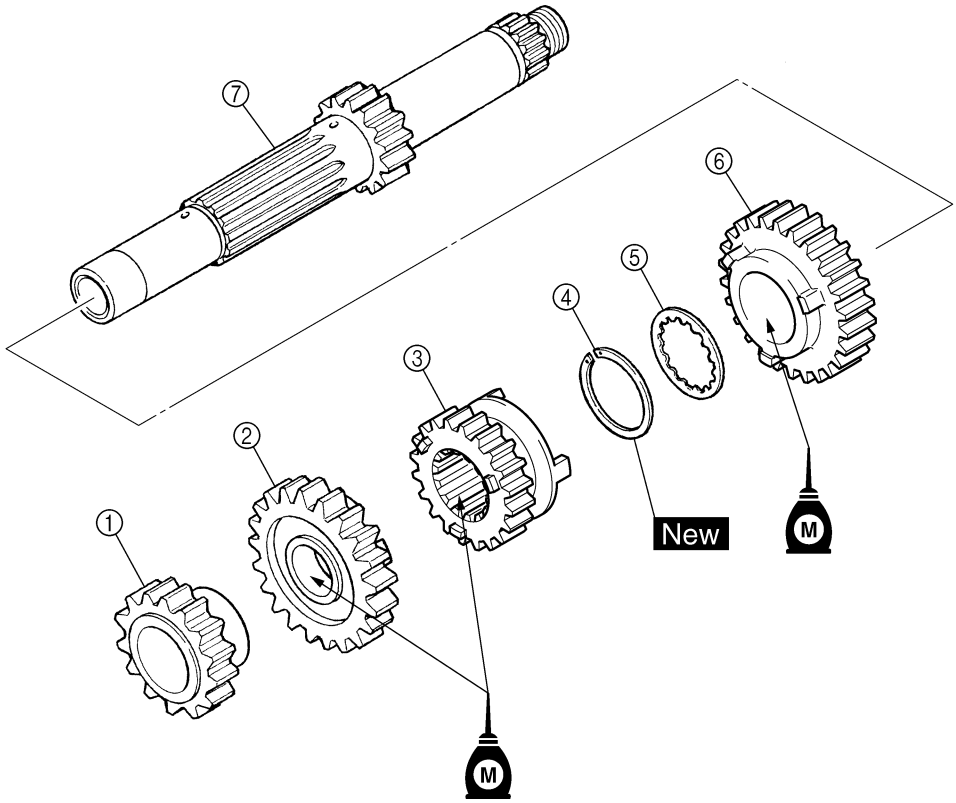

Order	Job/Part	Q'ty	Remarks
	Disassembling the main axle		Remove the parts in the order listed.
①	2nd pinion gear	1	Refer to "ASSEMBLING THE MAIN AXLE AND DRIVE AXLE".
②	4th pinion gear	1	
③	3rd pinion gear	1	
④	Circlip	1	Refer to "ASSEMBLING THE MAIN AXLE AND DRIVE AXLE".
⑤	Toothed washer	1	
⑥	5th pinion gear	1	
⑦	Main axle/1st pinion gear	1	
			For assembly, reverse the disassembly procedure.

EBS00348
DRIVE AXLE

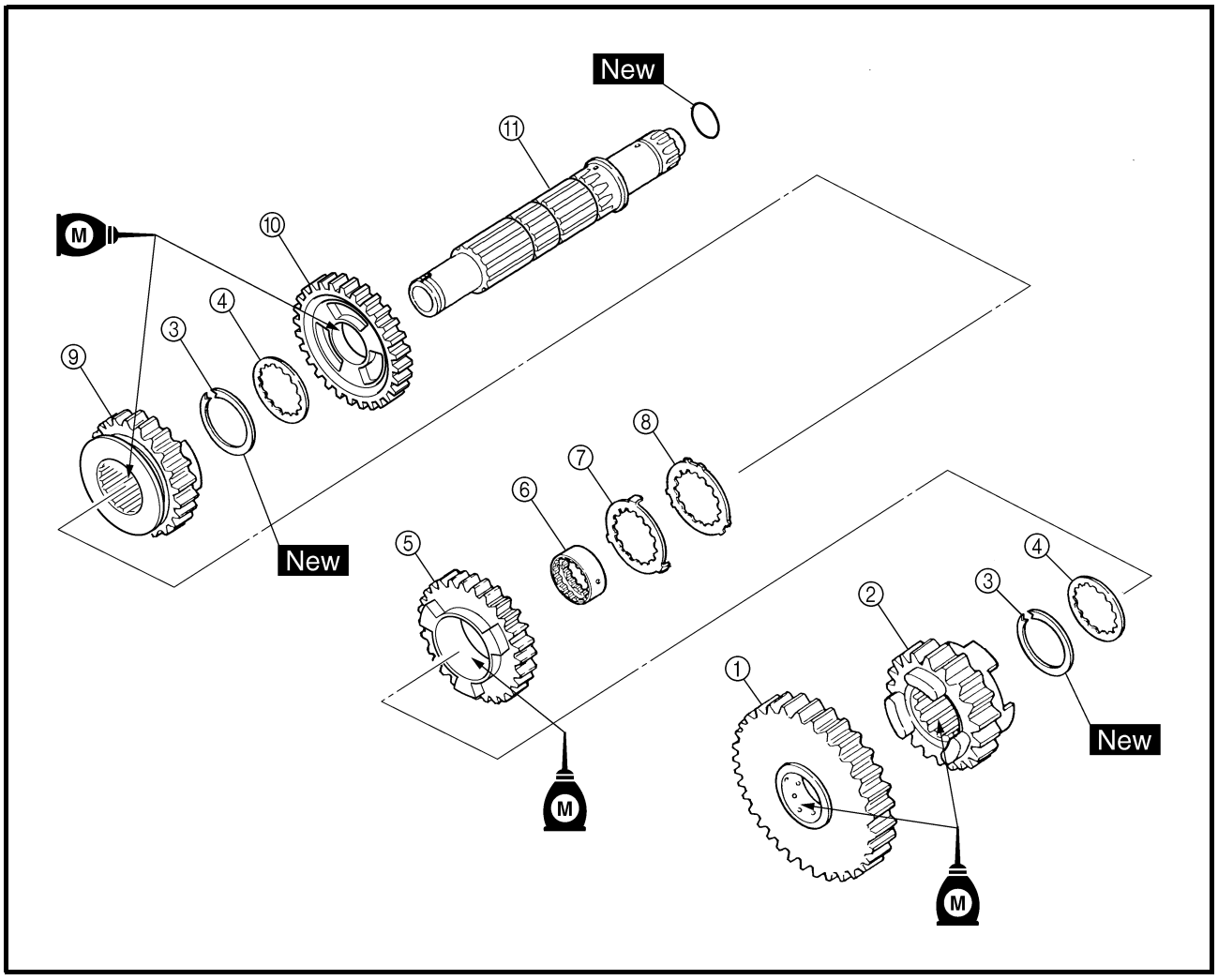

Order	Job/Part	Q'ty	Remarks
	Disassembling the drive axle		Remove the parts in the order listed.
	Crankcase		Refer to "CRANKCASE".
①	1st wheel gear	1	
②	5th wheel gear	1	
③	Circlip	2	Refer to "ASSEMBLING THE MAIN AXLE AND DRIVE AXLE".
④	Toothed washer	2	
⑤	3rd wheel gear	1	
⑥	Toothed spacer	1	
⑦	Toothed lock washer	1	
⑧	Toothed washer retainer	1	
⑨	4th wheel gear	1	
⑩	2nd wheel gear	1	
⑪	Drive axle	1	
			For assembly, reverse the disassembly procedure.

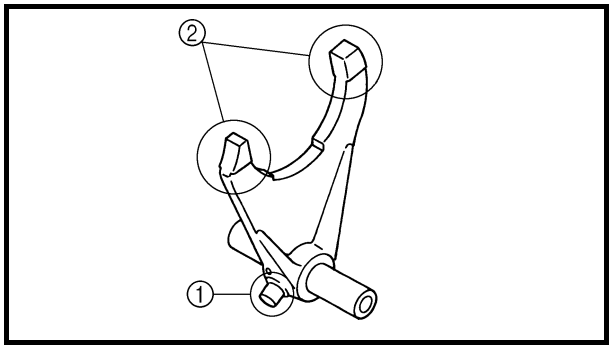

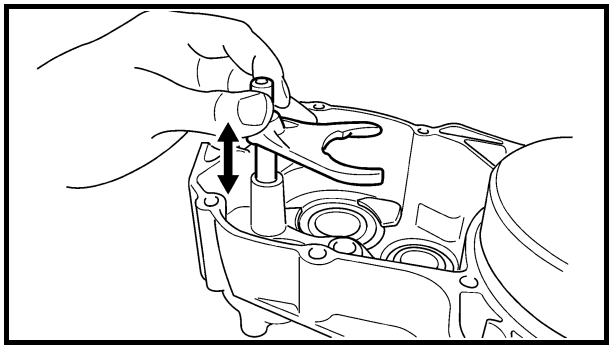

EBS00350

CHECKING THE SHIFT FORKS

The following procedure applies to all of the shift forks.

1. Check:
   - shift fork cam follower ①
   - shift fork pawl ②
     Bends/damage/scoring/wear → Replace the shift fork.
2. Check:
   - shift fork movement
     Rough movement → Replace the shift forks.

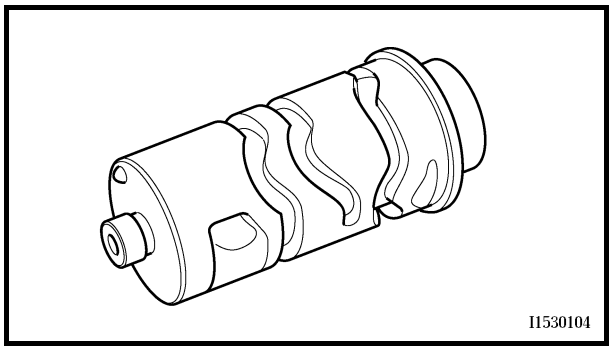

EBS00351

CHECKING THE SHIFT DRUM

1. Check:
   - shift drum grooves
     Scratches/wear/damage → Replace.

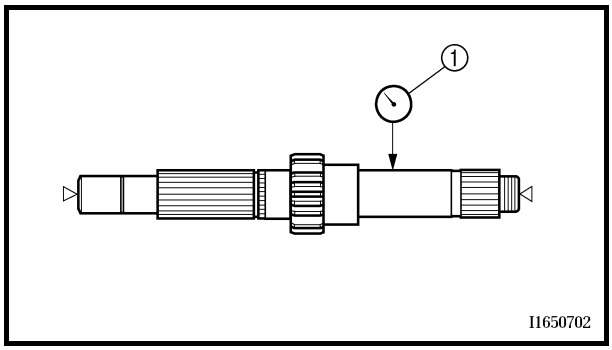

EBS00354

CHECKING THE TRANSMISSION

1. Measure:
   - main axle runout
     (with a centering device and dial gauge ①)
     Out of specification → Replace the main axle.

	Main axle runout limit **0.08 mm (0.0031 in)**

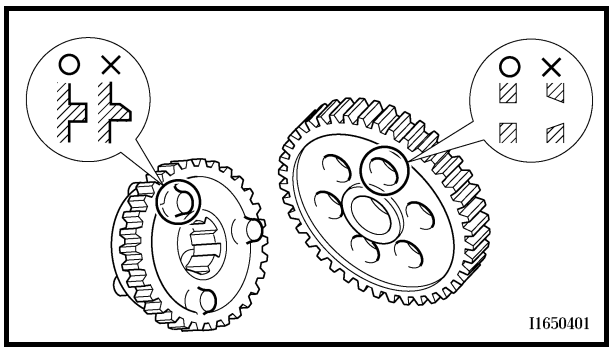

2. Check:
   - transmission gears
     Blue discoloration/pitting/wear → Replace the defective gear(s).
   - transmission gear dogs
     Cracks/damage/rounded edges → Replace the defective gear(s).

3. Check:
   - transmission gear engagement
     (each pinion gear to its respective wheel gear)
     Incorrect → Reassemble the transmission axle assemblies.
4. Check:
   - transmission gear movement
     Rough movement → Replace the defective part(s).
5. Check:
   - circlips
     Bends/damage/looseness → Replace.

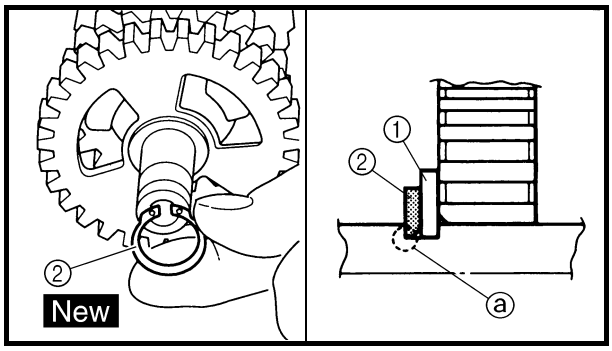

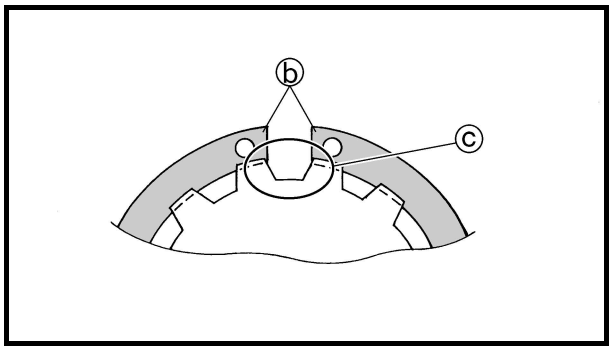

EBS00355

ASSEMBLING THE MAIN AXLE AND DRIVE AXLE

1. Install:
   - toothed washer ①
   - circlip ② New

NOTE:
- Be sure the circlip shape-edged corner ⓐ is positioned opposite side to the toothed washer and gear.
- Be sure the circlip end ⓑ is positioned at axle spline groove ⓒ.

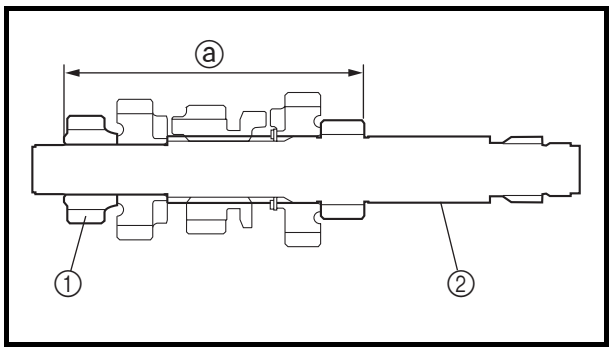

2. Install:
   - 2nd pinion gear ①

NOTE:
Press the 2nd pinion gear into the main axle ②, as shown in the illustration.

ⓐ 112.85 ~ 113.05 mm (4.443 ~ 4.451 in)

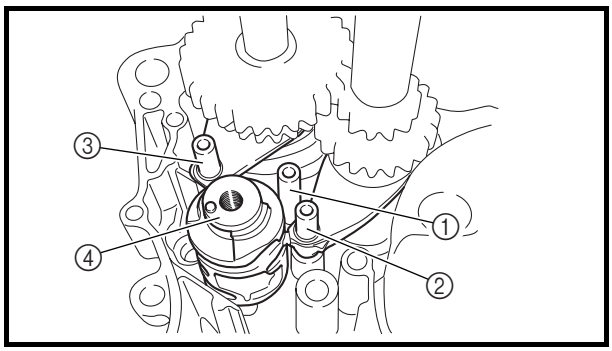

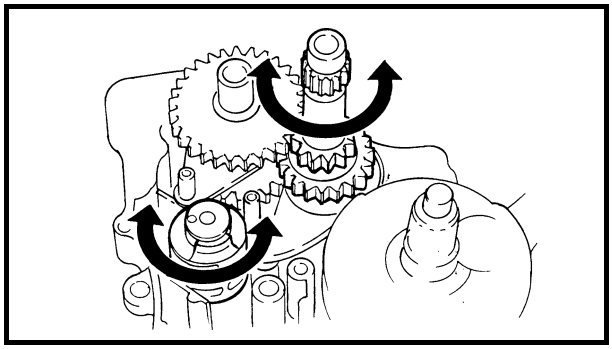

EBS00356

INSTALLING THE TRANSMISSION

1. Install:
   - shift fork “L” ① (to drive axle)
   - shift fork “C” ② (to main axle)
   - shift fork “R” ③ (to drive axle)
   - shift drum ④
   - transmission assembly

NOTE:

The embossed marks on the shift forks should face towards the right side of the engine and be in the following sequence: “R”, “C”, “L”. Be sure that the shift fork cam follower is properly seated in the shift drum groove.

2. Check:
   - shift operation
     Unsmooth operation → Repair.

NOTE:

- Oil each gear and bearing thoroughly.
- Before assembling the crankcase, be sure that the transmission is in neutral and that the gears turn freely.

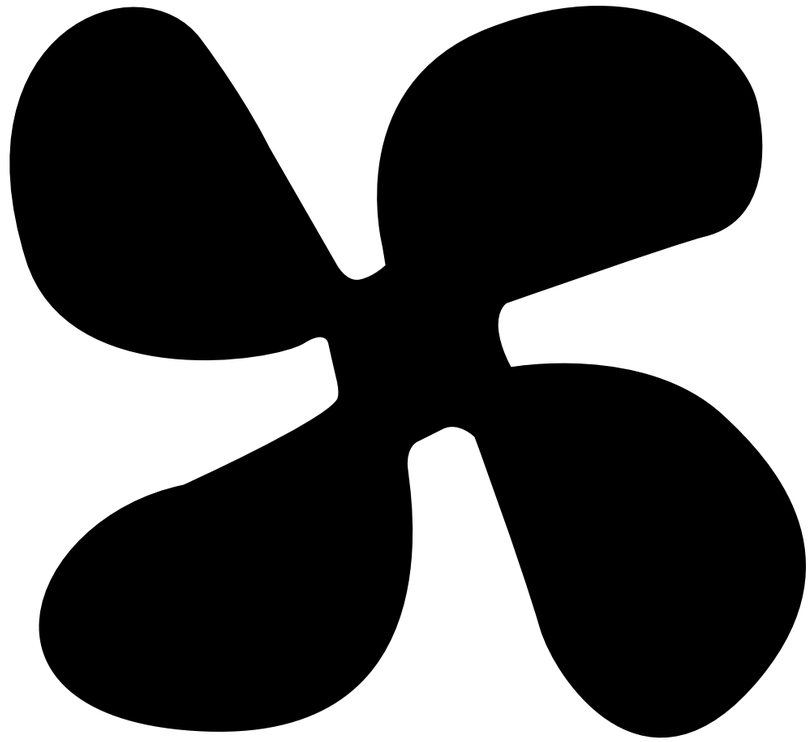

COOL 5

CHAPTER 5
COOLING SYSTEM

EBS00125

COOLING SYSTEM

RADIATOR

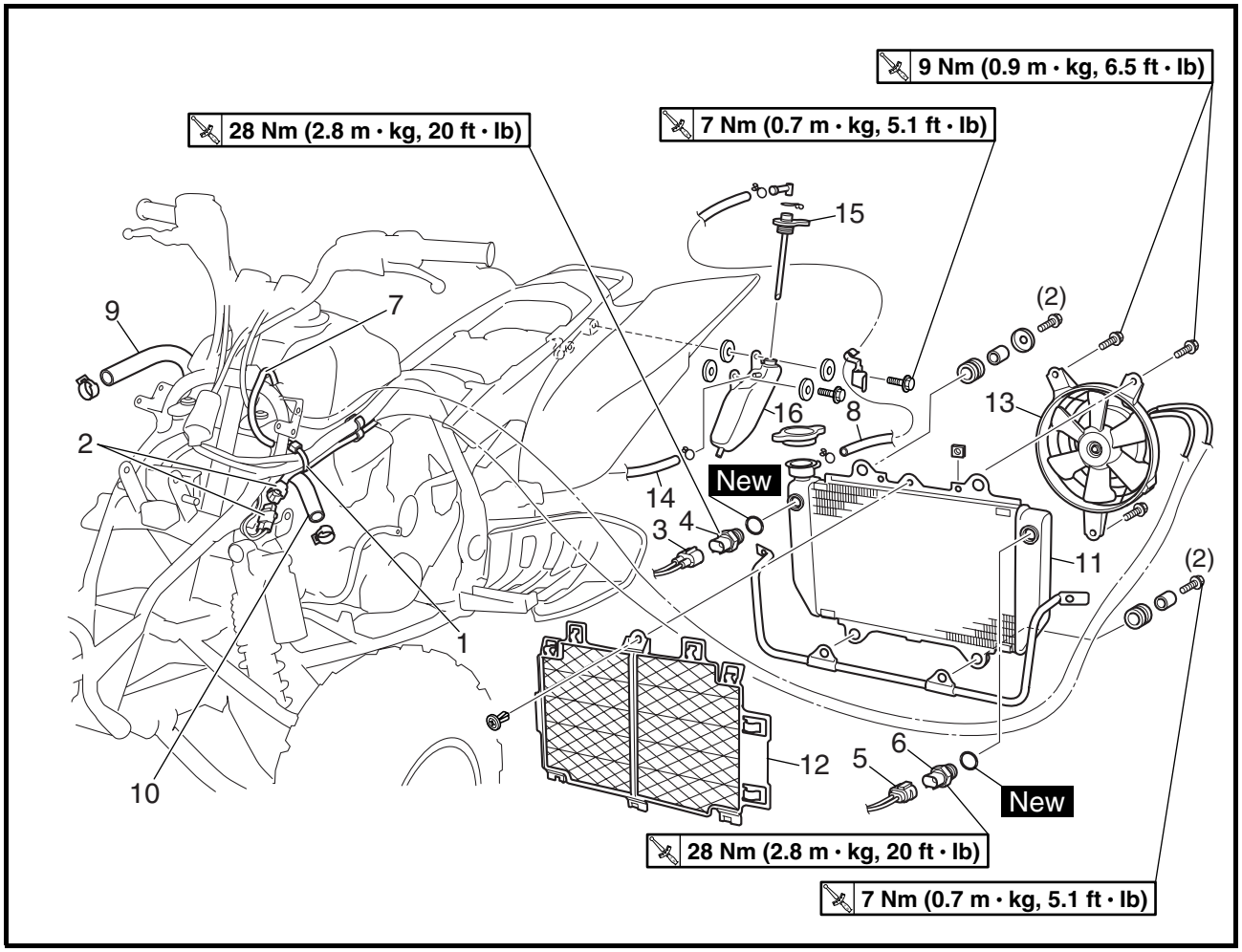

Order	Job/Part	Q'ty	Remarks
	Removing the radiator		Remove the parts in the order listed.
	Seat/fuel tank cover/side covers (left and right)/front fender		Refer to "SEAT, FENDERS AND FUEL TANK" in chapter 3.
	Coolant		Drain.
1	Plastic band	1	
2	Radiator fan coupler	1	Disconnect.
3	Thermo switch 1 coupler	1	Disconnect.
4	Thermo switch 1	1	
5	Thermo switch 2 coupler	1	Disconnect.
6	Thermo switch 2	1	
7	Radiator fan breather hose	1	
8	Coolant reservoir hose	1	
9	Radiator outlet hose	1	
10	Radiator inlet hose	1	

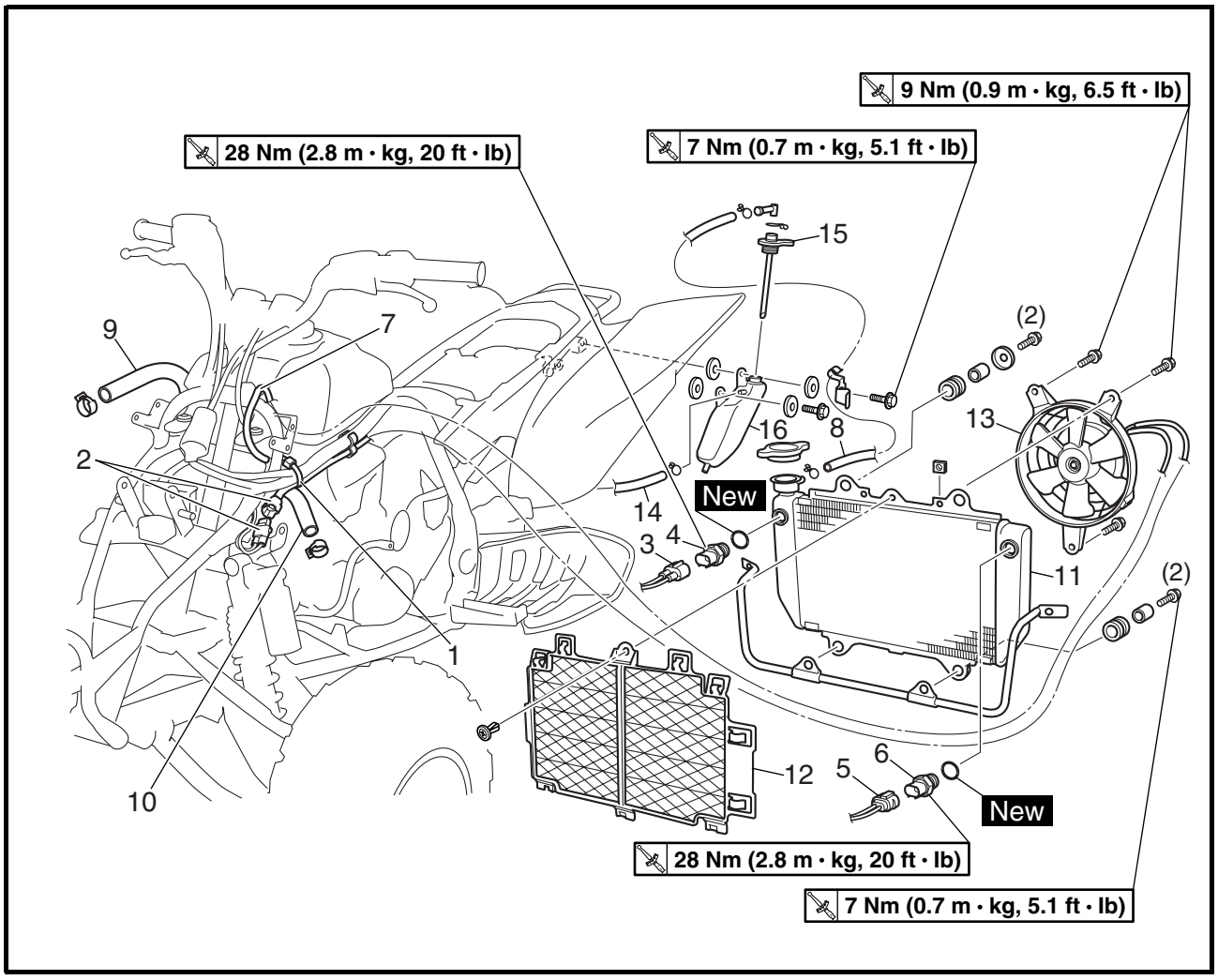

Order	Job/Part	Q'ty	Remarks
11	Radiator	1	
12	Radiator grill	1	
13	Radiator fan	1	
14	Coolant reservoir breather hose	1	
15	Coolant reservoir cap	1	
16	Coolant reservoir	1	
			For installation, reverse the removal procedure.

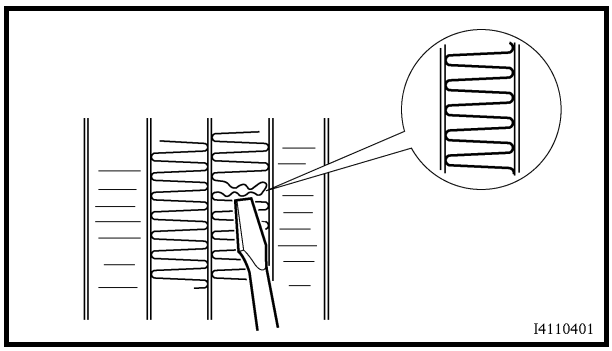

EBS00127

CHECKING THE RADIATOR

1. Check:
   - radiator fins
     Obstruction → Clean.
     Apply compressed air to the rear of the radiator.
     Damage → Repair or replace.

NOTE:
Straighten any flattened fins with a thin, flathead screwdriver.

2. Check:
   - radiator hoses
     Cracks/damage → Replace.

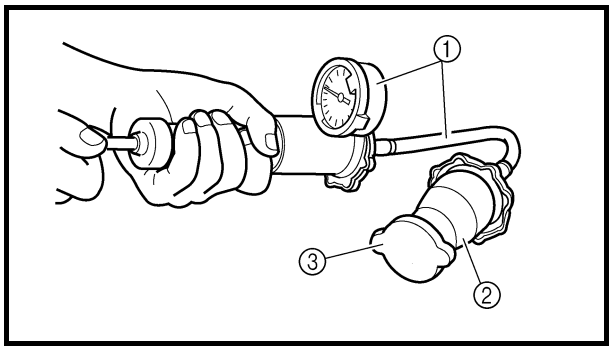

3. Measure:
   - radiator cap opening pressure
     Below the specified pressure → Replace the radiator cap.

Radiator cap opening pressure
107.9 ~ 137.3 kPa
(1.079 ~ 1.373 kg/cm², 15.35 ~ 19.53 psi)

▼▼▼▼▼▼▼▼▼▼▼▼▼▼▼▼▼▼▼▼▼▼▼▼▼▼▼▼▼▼▼▼▼▼

a. Install the radiator cap tester ① and radiator cap tester adapter ② to the radiator cap ③.

Radiator cap tester
P/N. YU-24460-01, 90890-01325
Radiator cap tester adapter
P/N. YU-33984, 90890-01352

b. Apply the specified pressure for ten seconds and make sure there is no drop in pressure.

▲▲▲▲▲▲▲▲▲▲▲▲▲▲▲▲▲▲▲▲▲▲▲▲▲▲▲▲▲▲▲▲▲▲

4. Check:
   - radiator fan
     Damage → Replace.
     Malfunction → Check and repair.
     Refer to “COOLING SYSTEM” in chapter 8.

EBS00128

INSTALLING THE RADIATOR

1. Fill:
   - cooling system
     (with the specified amount of the recommended coolant)
     Refer to “CHANGING THE COOLANT” in chapter 3.
2. Check:
   - cooling system
     Leaks → Repair or replace any faulty part.

EBS00134

WATER PUMP

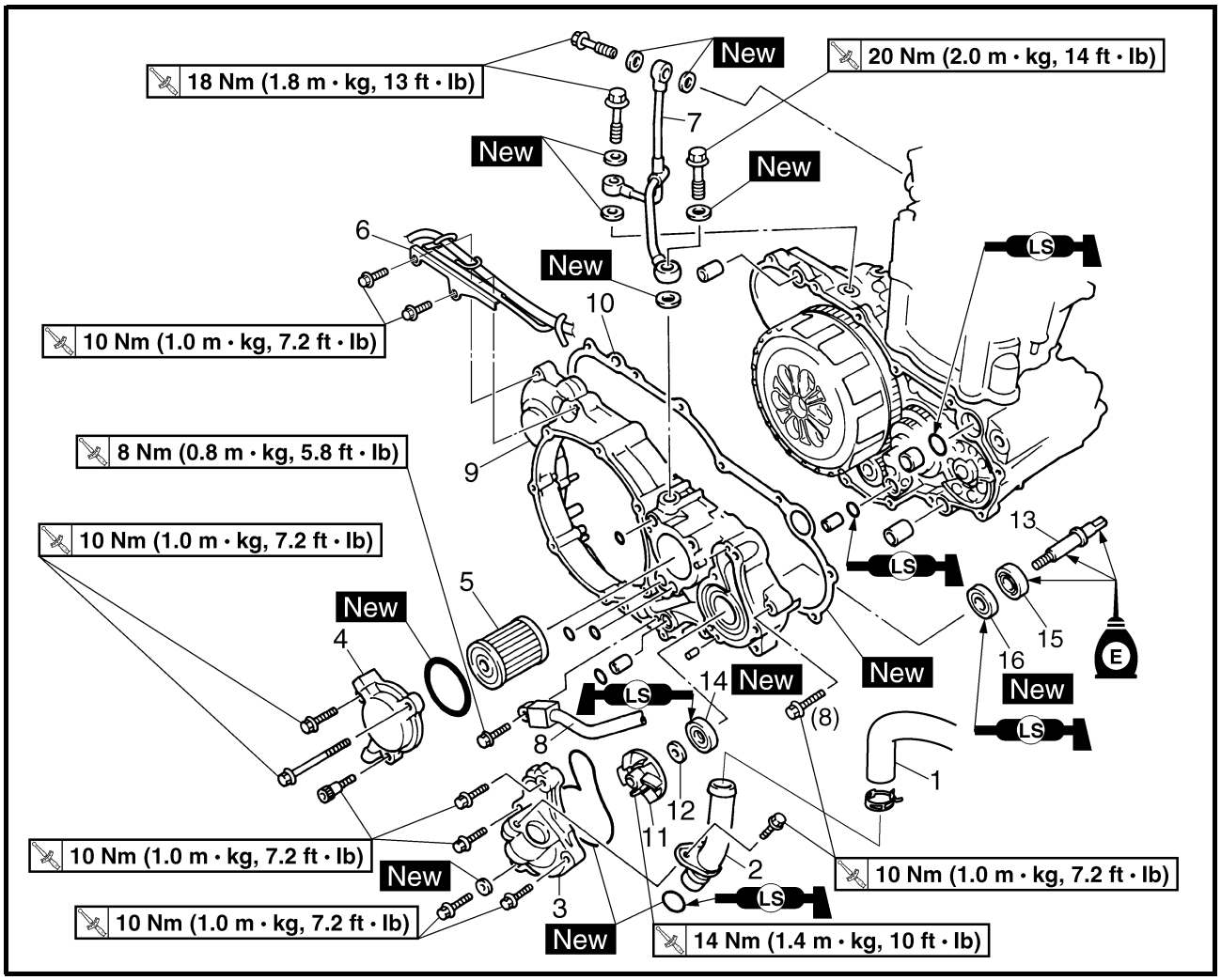

Order	Job/Part	Q'ty	Remarks
	Removing the water pump		Remove the parts in the order listed.
	Engine oil		Drain.
	Coolant		Drain.
	Exhaust pipe		Refer to "ENGINE REMOVAL" in chapter 4.
	Rear brake light switch/footrest (right)		Refer to "FRONT AND REAR BRAKES" in chapter 7.
	Clutch cover		Refer to "CLUTCH" in chapter 4.
1	Radiator outlet hose	1	
2	Water pump inlet pipe	1	
3	Water pump housing	1	
4	Oil filter element cover	1	
5	Oil filter element	1	
6	Parking brake holder	1	
7	Oil delivery pipe 1	1	

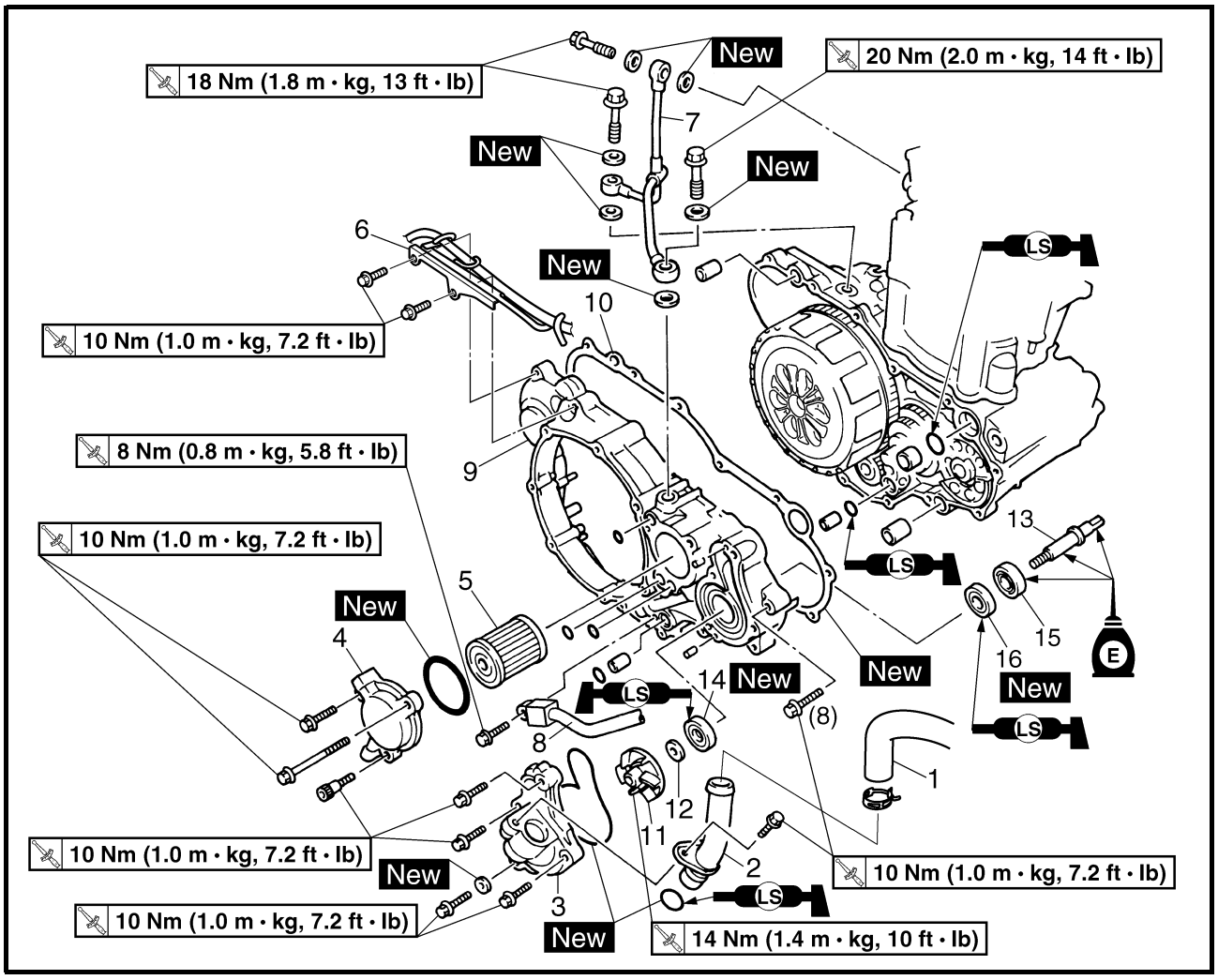

Order	Job/Part	Q'ty	Remarks
8	Oil hose 1	1	
9	Right crankcase cover	1	
10	Gasket	1	
11	Impeller	1	
12	Washer	1	
13	Impeller shaft	1	
14	Oil seal	1	
15	Bearing	1	
16	Oil seal	1	
			For installation, reverse the removal procedure.

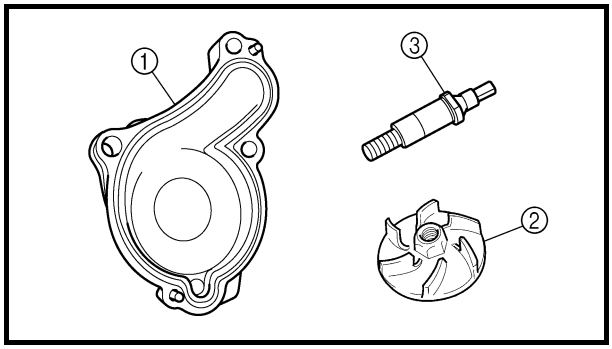

EBS00139

CHECKING THE WATER PUMP

1. Check:
   - water pump housing ①
   - impeller ②
   - impeller shaft ③
     Cracks/damage/wear → Replace.
2. Check:
   - oil seal New
   - water pump inlet pipe
     Cracks/damage/wear → Replace.
   - bearing
     Rough movement → Replace.

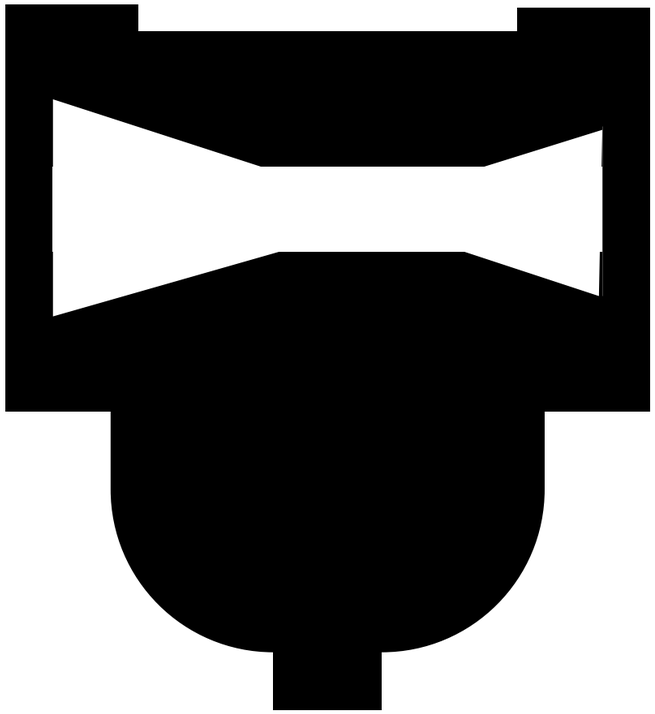

CARB 6

CHAPTER 6
CARBURETOR

EBS00141

CARBURETOR

CARBURETOR

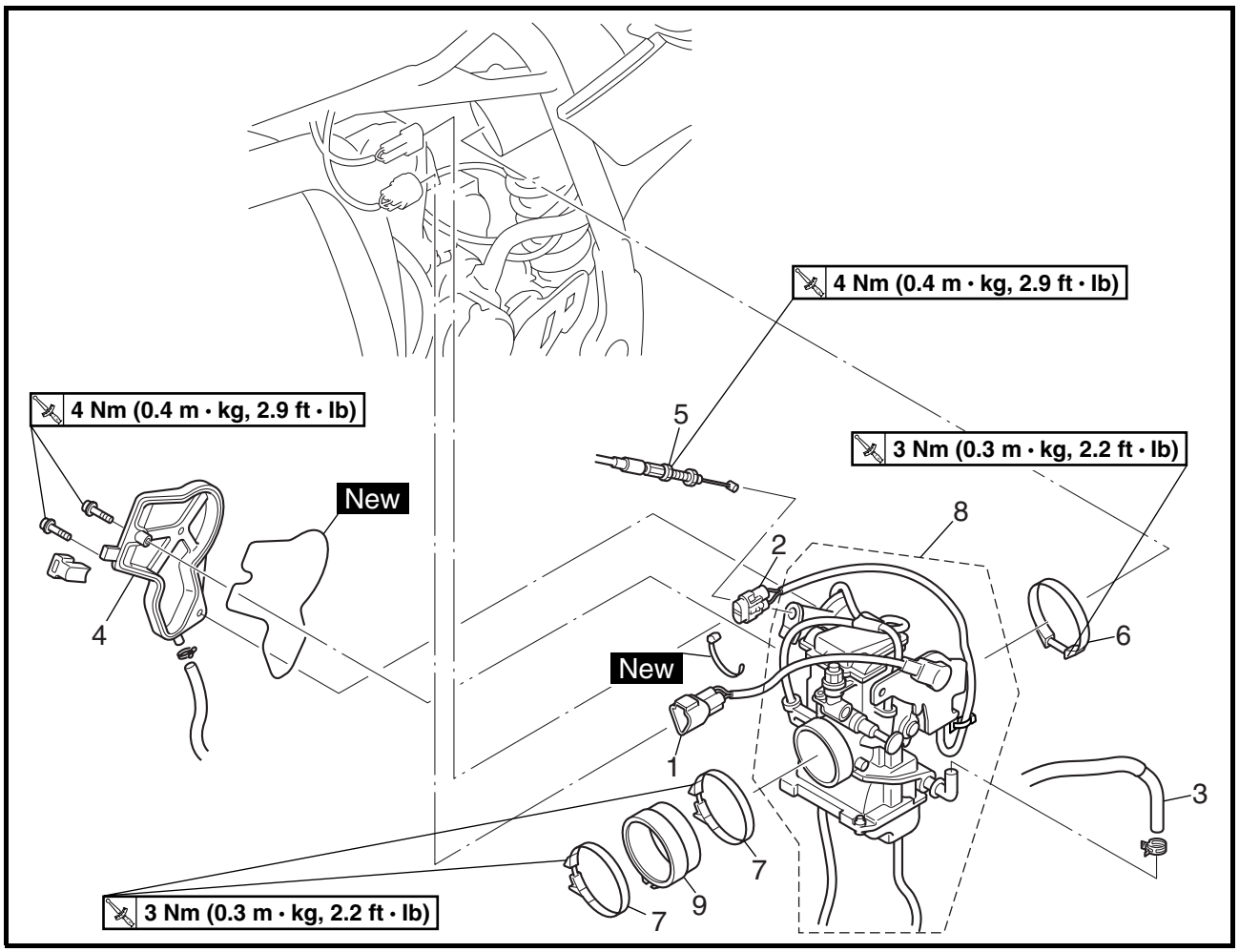

Order	Job/Part	Q'ty	Remarks
	Removing a carburetor		Remove the parts in the order listed.
	Seat/fuel tank cover/side covers (left and right)		Refer to "SEAT, FENDERS AND FUEL TANK" in chapter 3.
1	Throttle position sensor coupler	1	Disconnect.
2	Carburetor switch coupler	1	Disconnect.
3	Fuel hose (carburetor side)	1	
4	Throttle cable cover	1	
5	Throttle cable	1	
6	Clamp	1	Loosen. Refer to "INSTALLING THE CARBURETOR JOINT" and "INSTALLING THE CARBURETOR".
7	Clamp	2	Loosen.
8	Carburetor	1	
9	Carburetor joint	1	
			For installation, reverse the removal procedure.

EBS00144

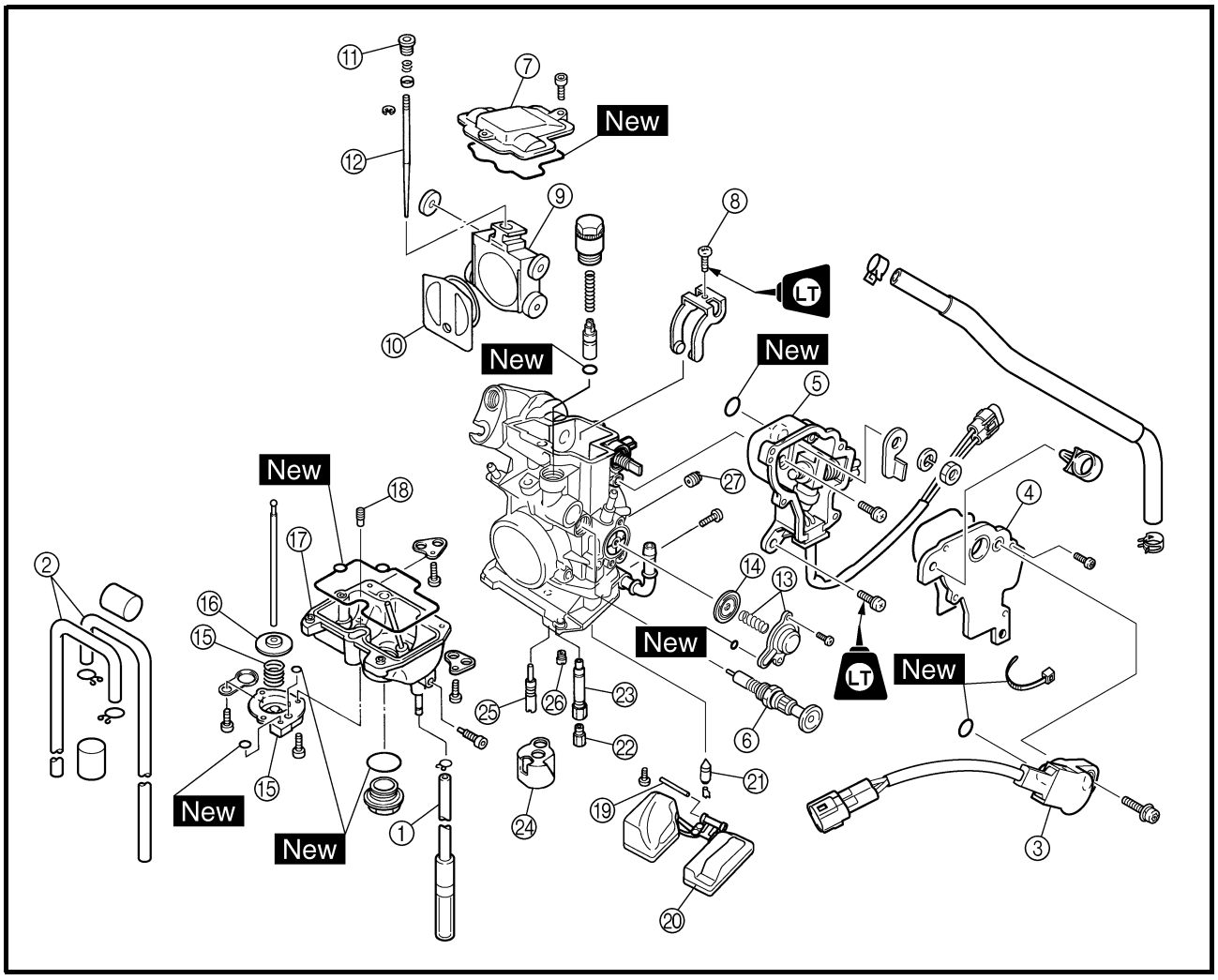

Order	Job/Part	Q'ty	Remarks
	Disassembling the carburetor		Remove the parts in the order listed.
①	Drain hose	1	
②	Air vent hose	2	
③	Throttle position sensor	1	
④	Cover	1	
⑤	Carburetor switch/throttle stop screw assembly	1	
⑥	Starter plunger	1	
⑦	Carburetor top cover	1	
⑧	Screw (throttle shaft)	1	
⑨	Throttle valve	1	
⑩	Throttle valve plate	1	

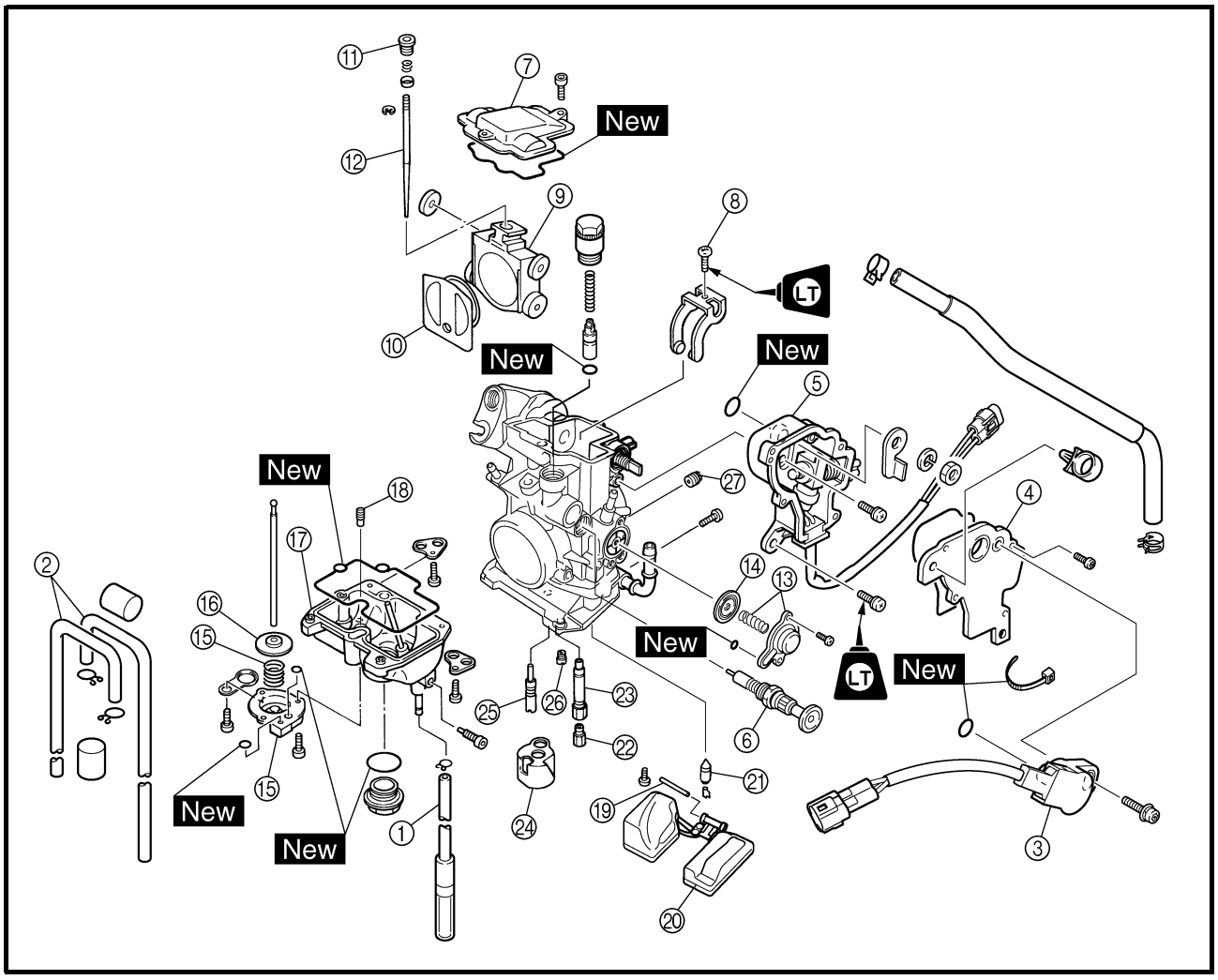

Order	Job/Part	Q'ty	Remarks
⑪	Needle holder	1	
⑫	Jet needle	1	
⑬	Cover/spring	1/1	
⑭	Pilot air diaphragm	1	
⑮	Cover/spring	1/1	
⑯	Accelerator pump diaphragm	1	
⑰	Float chamber	1	
⑱	Accelerator jet	1	
⑲	Float pin	1	
⑳	Float	1	

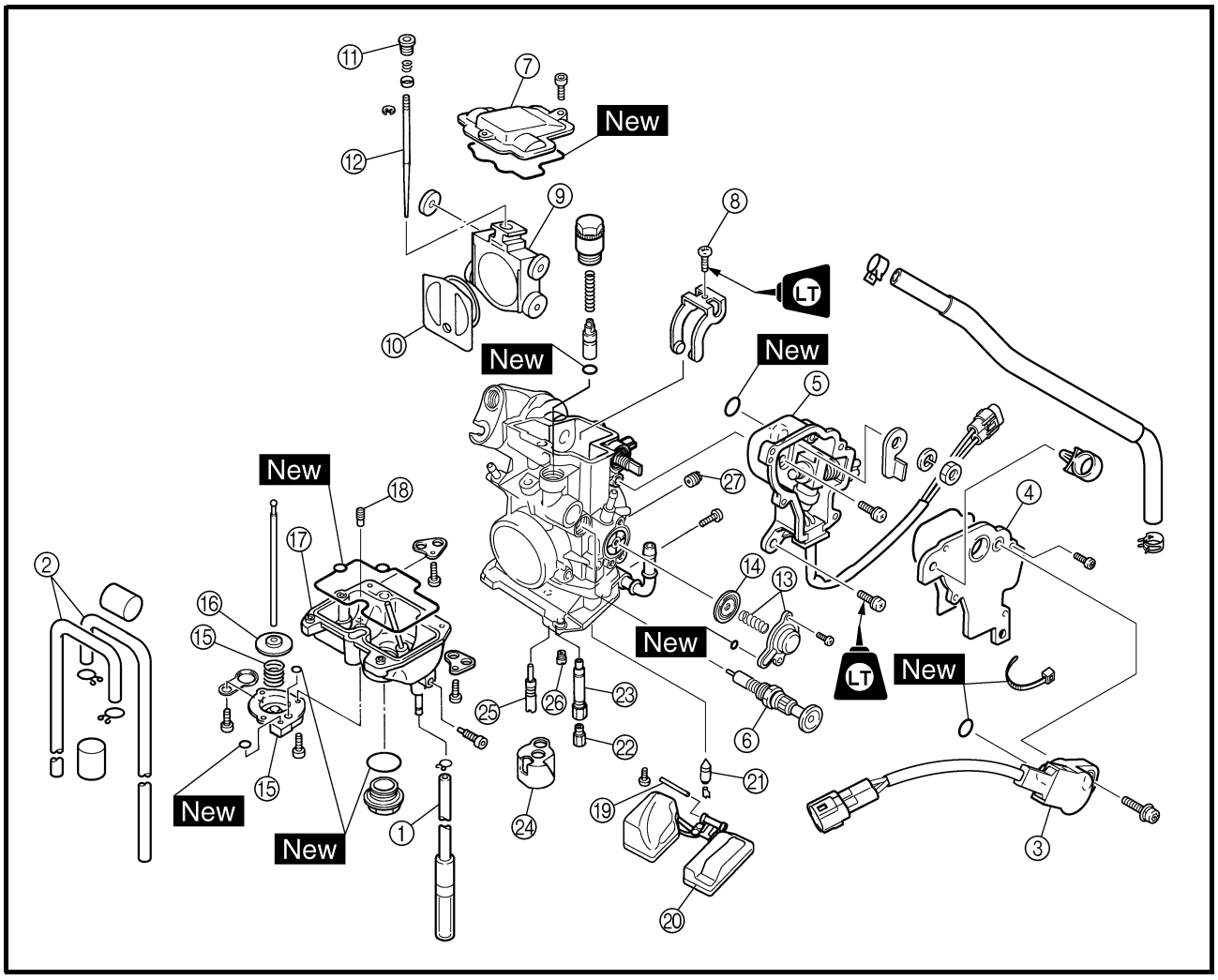

Order	Job/Part	Q'ty	Remarks
㉑	Needle valve	1	
㉒	Main jet	1	
㉓	Needle jet	1	
㉔	Spacer	1	
㉕	Pilot jet	1	
㉖	Starter jet	1	
㉗	Pilot air jet	1	
			For assembly, reverse the disassembly procedure.

EBS00146
DISASSEMBLING THE CARBURETOR

NOTE:
Before disassembling the carburetor, make sure to note the number of times the pilot screw is turned out from the seated position to its set position.

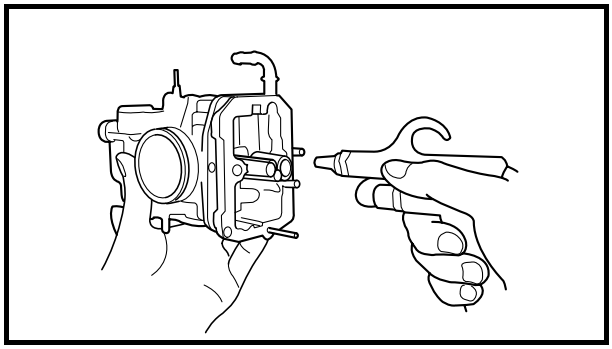

EBS00148
CHECKING THE CARBURETOR

1. Check:
   - carburetor body
   - float chamber
     Cracks/damage → Replace.
   - fuel passage
     Contamination → Clean as indicated.
   - fuel chamber body
     Contamination → Clean.

▼▼▼▼▼▼▼▼▼▼▼▼▼▼▼▼▼▼▼▼▼▼▼▼▼▼▼▼▼▼▼▼▼▼

a. Wash the carburetor in a petroleum based solvent. Do not use any caustic carburetor cleaning solution.
b. Blow out all of the passages and jets with compressed air.

▲▲▲▲▲▲▲▲▲▲▲▲▲▲▲▲▲▲▲▲▲▲▲▲▲▲▲▲▲▲▲▲▲▲

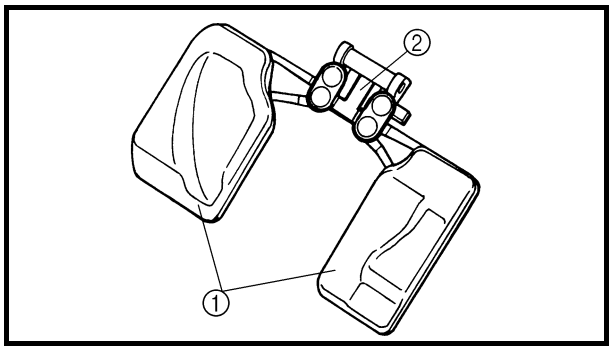

2. Check:
   - float ①
   - float tang ②
     Damage → Replace.

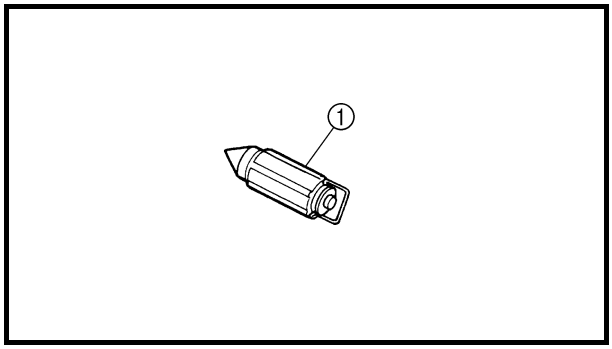

3. Check:
   - valve seat
   - needle valve ①
     Contamination → Clean.
     Wear/damage → Replace the carburetor assembly.

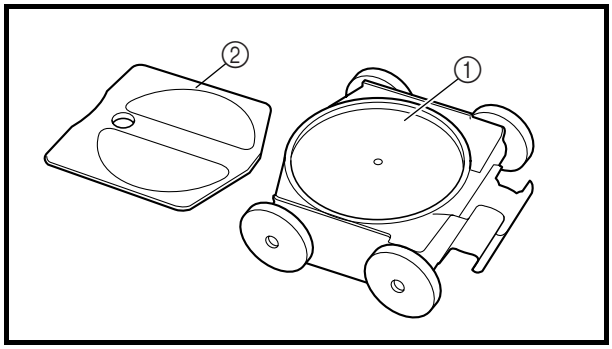

4. Check:
   - throttle valve ①
   - throttle valve plate ②
     Scratches/wear/damage → Replace.

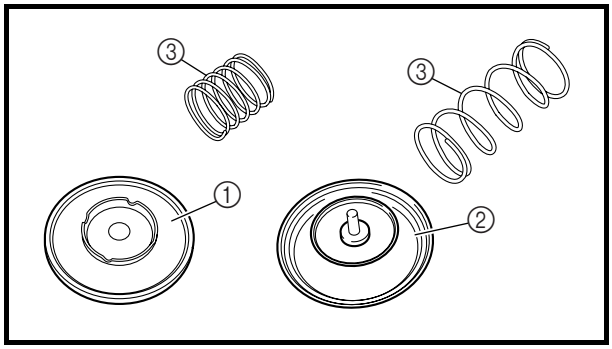

5. Check:
   - accelerator pump diaphragm ①
   - pilot jet diaphragm ②
   - spring ③

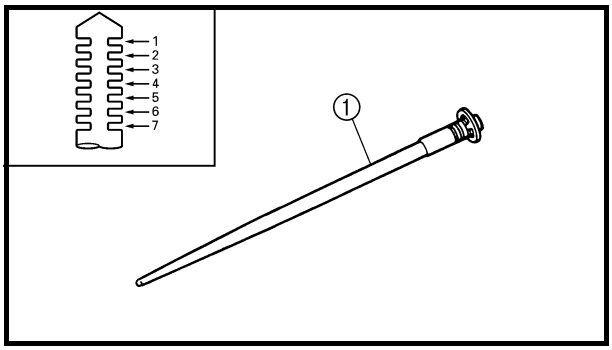

6. Check:
   - jet needle ①
     Bends/wear/damage → Replace.
   - clip groove
     Free play/wear → Replace.
   - clip position

	Standard clip position **No.4 groove**

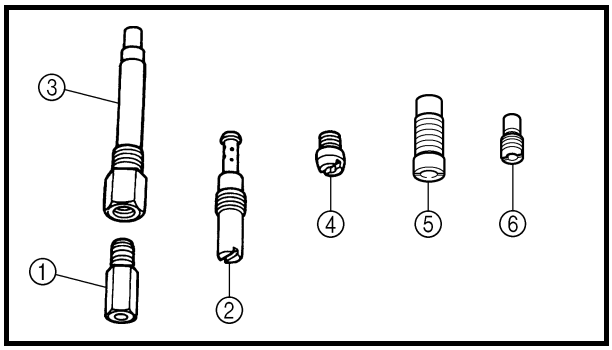

7. Check:
   - main jet ①
   - pilot jet ②
   - needle jet ③
   - starter jet ④
   - pilot air jet ⑤
   - accelerator jet ⑥
     Bends/wear/damage → Replace.
     Blockage → Blow out the jets with compressed air.

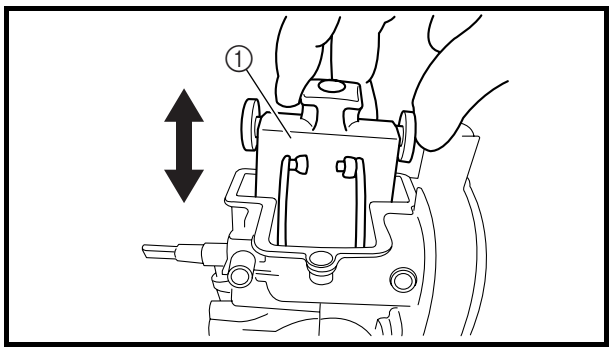

8. Check:
   - throttle valve movement ①
     Sticks → Replace the throttle valve guide and the throttle valve.
     Insert the throttle valve into the carburetor body, and check for free movement.

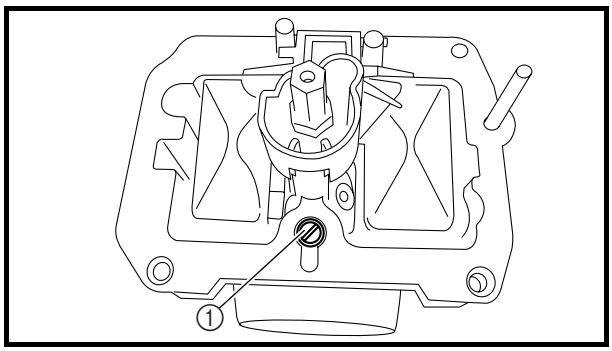

EBS00150

ASSEMBLING THE CARBURETOR

CAUTION:

Before reassembling, wash all of the parts in a clean petroleum based solvent.

1. Install:
   - pilot screw ①

NOTE:

Before assembling the carburetor, make sure to turn out the pilot screw the same number of times, as noted before disassembly, from the seated position to the set position.

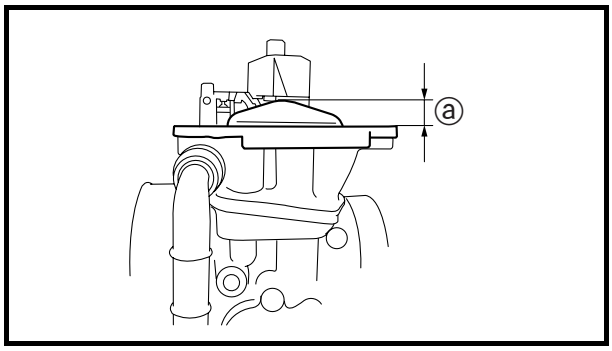

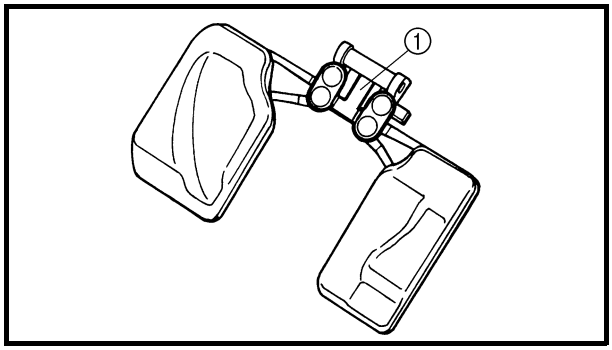

2. Measure:
   - float height ⓐ
     Out of specification → Adjust.

Float height (F.H)
8.0 mm (0.31 in)

▼▼▼▼▼▼▼▼▼▼▼▼▼▼▼▼▼▼▼▼▼▼▼▼▼▼▼▼▼▼▼▼▼▼▼▼

a. Hold the carburetor in an upside down position.
b. Measure the distance from the front mating surface of the float chamber (gasket removed) to the top of the float.

NOTE:

The float arm should be resting on the needle valve, but not compressing it.

c. If the float height is not within the specification, check the valve seat and needle valve.
d. If either is worn, replace the carburetor assembly.
e. If both are fine, adjust the float height by bending the float tang ① on the float.
f. Recheck the float height.

▲▲▲▲▲▲▲▲▲▲▲▲▲▲▲▲▲▲▲▲▲▲▲▲▲▲▲▲▲▲▲

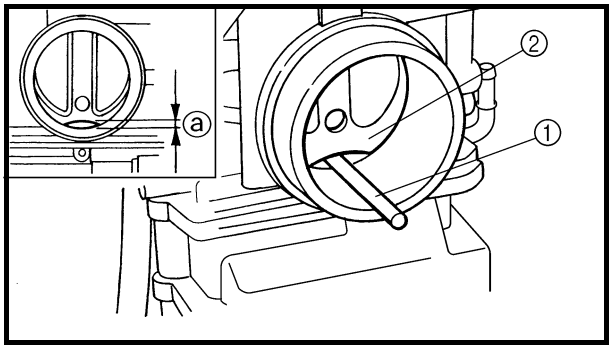

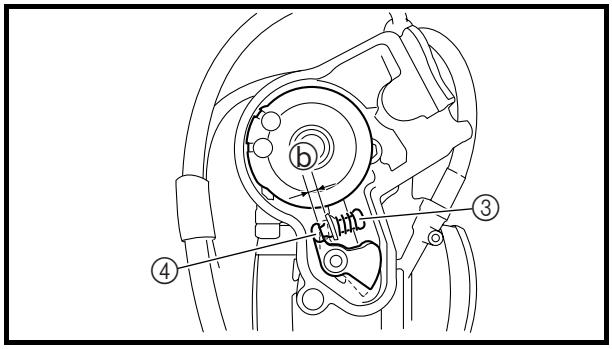

ADJUSTING THE ACCELERATOR PUMP TIMING

1. Adjust:
   - accelerator pump timing

▼▼▼▼▼▼▼▼▼▼▼▼▼▼▼▼▼▼▼▼▼▼▼▼▼▼▼▼▼▼▼▼▼▼

NOTE:

Insert a rod ① with an outer diameter equal to the specified throttle valve height ⓐ under the throttle valve plate ② to achieve the specified value.

	Throttle valve height 3.40 mm (0.134 in)

a. Fully turn in the accelerator pump adjusting screw ③.
b. Check that the link lever ④ has free play ⓑ by pushing lightly on it.
c. Gradually turn out the adjusting screw while moving the link lever until the lever has no free play.

▲▲▲▲▲▲▲▲▲▲▲▲▲▲▲▲▲▲▲▲▲▲▲▲▲▲▲▲▲▲▲▲▲▲

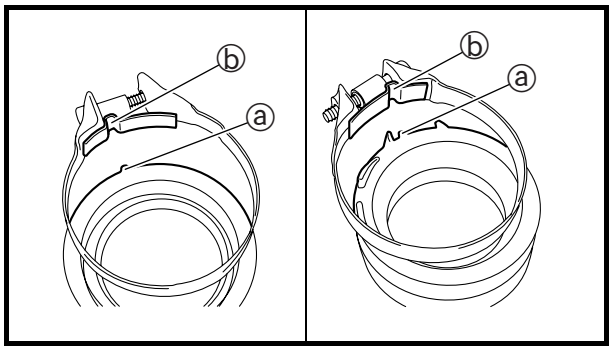

INSTALLING THE CARBURETOR JOINT

1. Install:
   - clamp

NOTE:

Align the projection ⓐ on the carburetor joint with the slot ⓑ in the clamp.

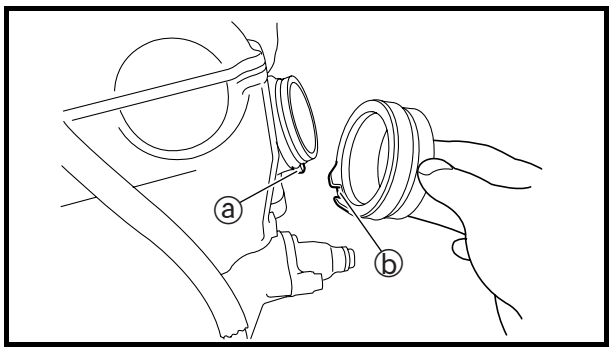

2. Install:
   - carburetor joint

NOTE:

Align the projection ⓐ on the cylinder head with the slot ⓑ in the carburetor joint.

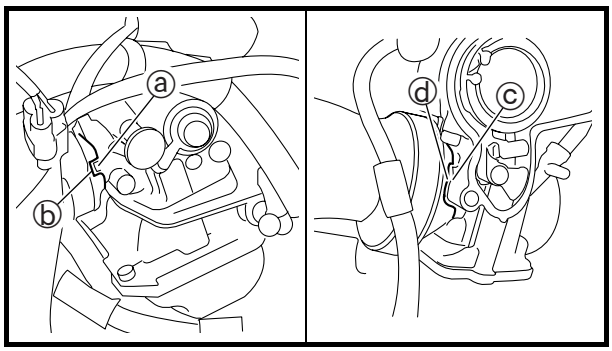

INSTALLING THE CARBURETOR

1. Install:
   - carburetor

NOTE:

Align the projection ⓐ on the carburetor with the slot ⓑ in the carburetor joint, and then align the projection ⓒ on the carburetor with the slot ⓓ in the air intake duct.

2. Install:
   - throttle cable
   - throttle cable cover
3. Adjust:
   - throttle lever free play
     Refer to “ADJUSTING THE THROTTLE LEVER FREE PLAY” in chapter 3.
4. Adjust:
   - engine idling speed
     Refer to “ADJUSTING THE ENGINE IDLING SPEED” in chapter 3.

EAS00502

CHECKING AND ADJUSTING THE THROTTLE POSITION SENSOR

NOTE:

Before adjusting the throttle position sensor, the engine idling speed should be properly adjusted.

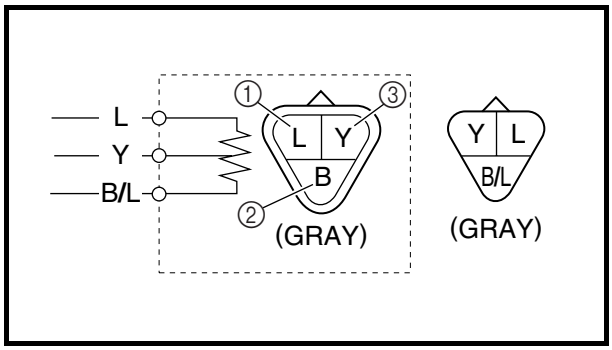

1. Check:
   - throttle position sensor

▼▼▼▼▼▼▼▼▼▼▼▼▼▼▼▼▼▼▼▼▼▼▼▼▼▼▼▼▼▼▼▼▼▼

a. Turn the main switch to “ON”.
b. Connect the pocket tester (20 V DC) to the throttle position sensor.

Tester positive lead → blue ①
Tester negative lead → black ②

c. Check the throttle position sensor input voltage.
   Out of specification → Check the wire harness between battery and C.D.I. unit and throttle position sensor.

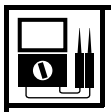

Throttle position sensor input voltage
5 V (blue and black)

▲▲▲▲▲▲▲▲▲▲▲▲▲▲▲▲▲▲▲▲▲▲▲▲▲▲▲▲▲▲▲▲▲▲

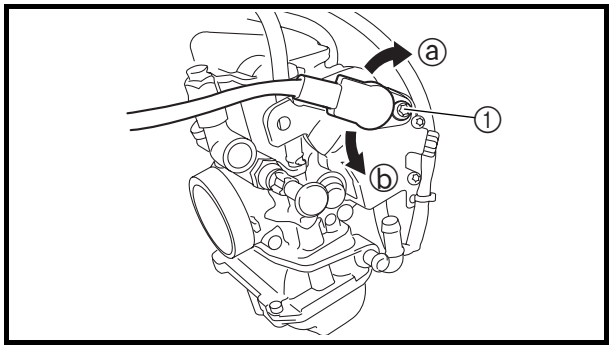

2. Adjust:
   - throttle position sensor angle

▼▼▼▼▼▼▼▼▼▼▼▼▼▼▼▼▼▼▼▼▼▼▼▼▼▼▼▼▼▼▼▼▼▼

a. Loosen the throttle position sensor screw ①.
b. Turn the throttle position sensor in direction ⓐ or ⓑ until the specified throttle position sensor output voltage is indicated on the pocket tester.
c. Connect the pocket tester (20 V DC) to the throttle position sensor.

Tester positive lead → yellow ③
Tester negative lead → black ②

d. Check the throttle position sensor output voltage.
   Out of specification → Adjust or replace.

Throttle position sensor output voltage
0.58 ~ 0.78 V (yellow and black)

NOTE:
When checking the throttle position sensor, it must be connected to the throttle position sensor coupler on the wire harness.

▲▲▲▲▲▲▲▲▲▲▲▲▲▲▲▲▲▲▲▲▲▲▲▲▲▲▲▲▲▲▲▲▲▲

3. Tighten:
   - throttle position sensor screw

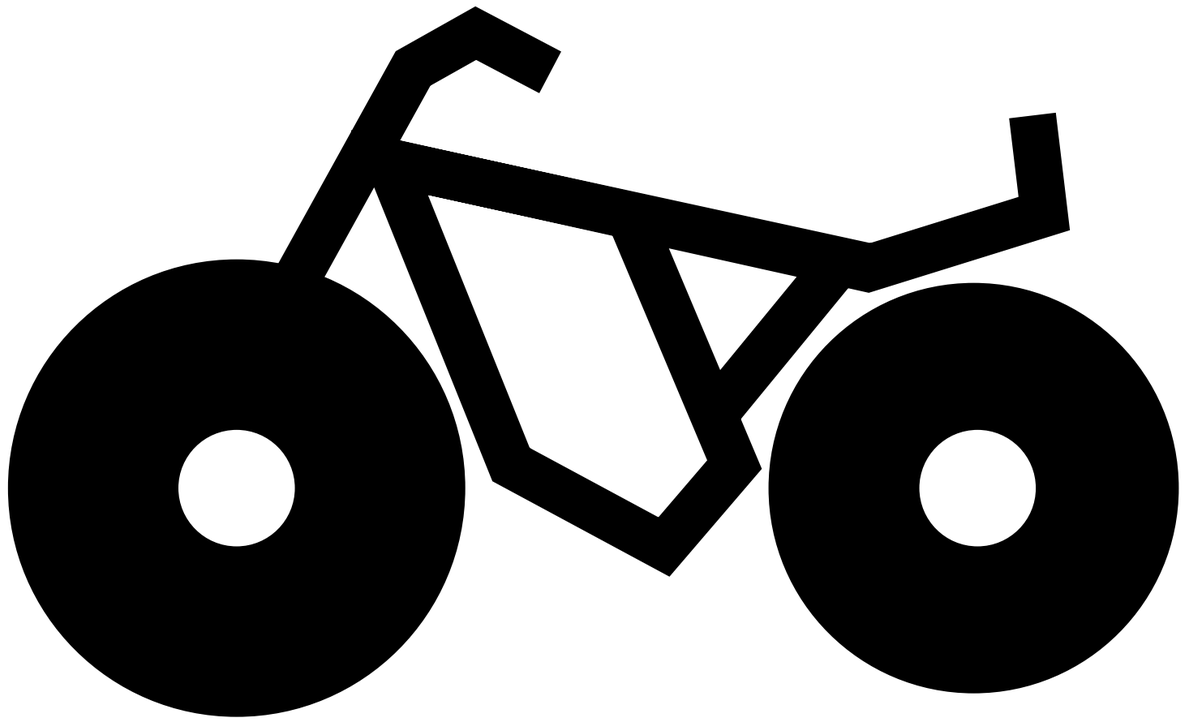

CHAS 7

CHAPTER 7
CHASSIS

EBS00378

CHASSIS

FRONT AND REAR WHEELS

FRONT WHEELS

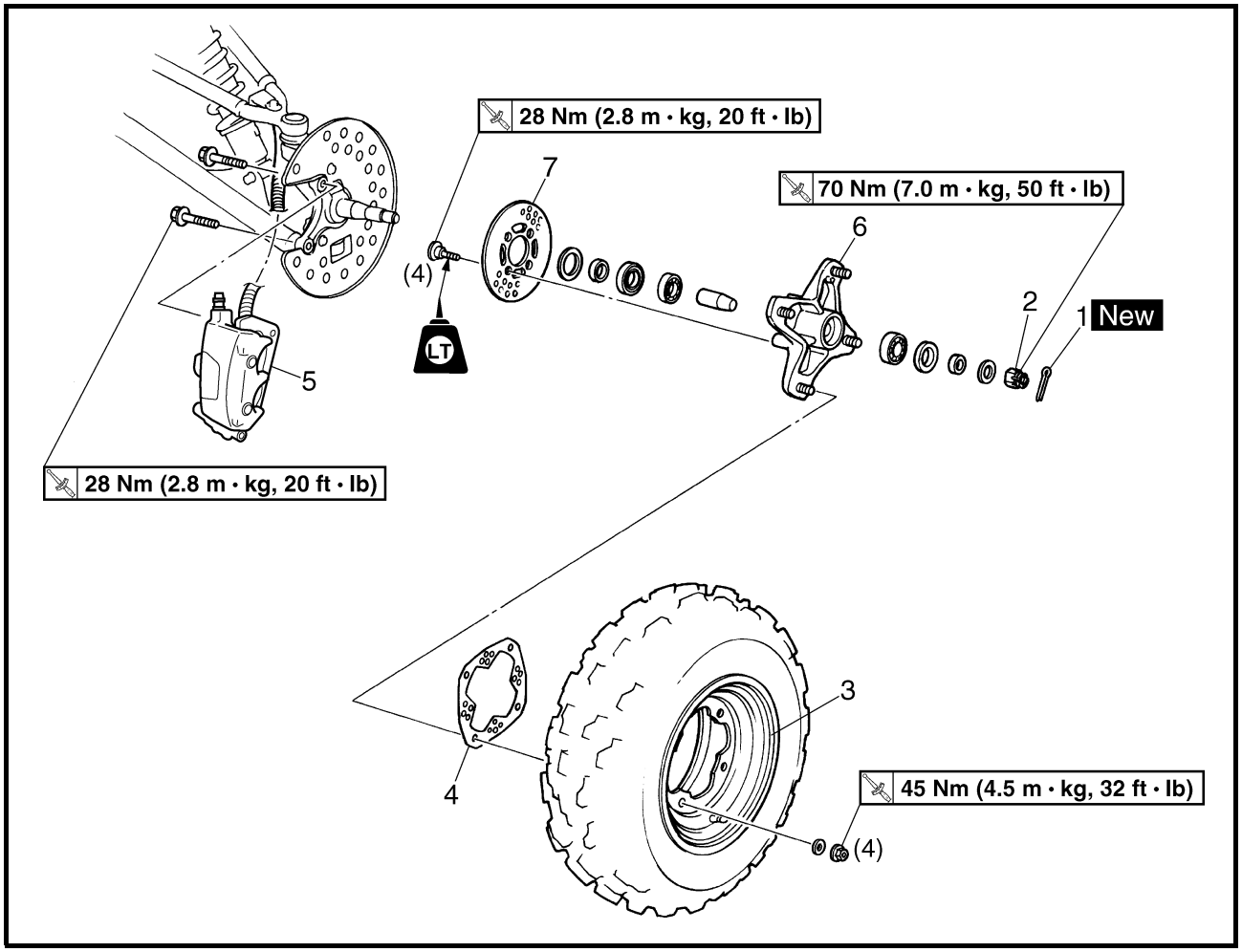

Order	Job/Part	Q'ty	Remarks
	Removing the front wheels		Remove the parts in the order listed. The following procedure applies to both of the front wheels. Place the machine on a level surface. **WARNING** **Securely support the machine so there is no danger of it falling over.**
1	Cotter pin	1	Refer to "INSTALLING THE WHEEL HUBS".
2	Axle nut	1	
3	Front wheel	1	Refer to "INSTALLING THE FRONT WHEELS".
4	Brake disc guard (outer)	1	

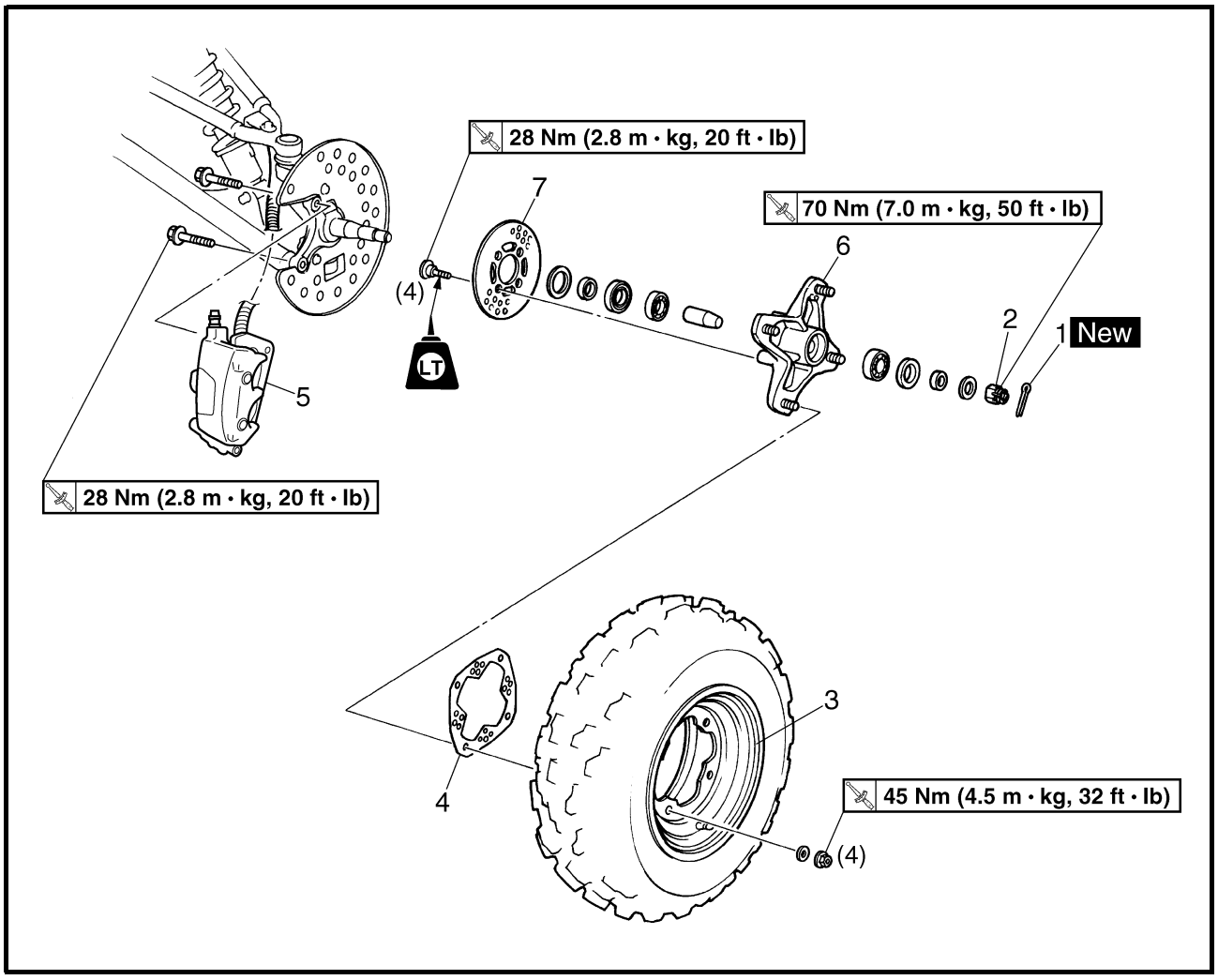

Order	Job/Part	Q'ty	Remarks
5	Brake caliper assembly	1	**NOTE:** Do not squeeze the brake lever when the brake caliper is off of the brake discs as the brake pads will be forced shut.
6	Wheel hub	1	
7	Brake disc	1	For installation, reverse the removal procedure.

REAR WHEELS

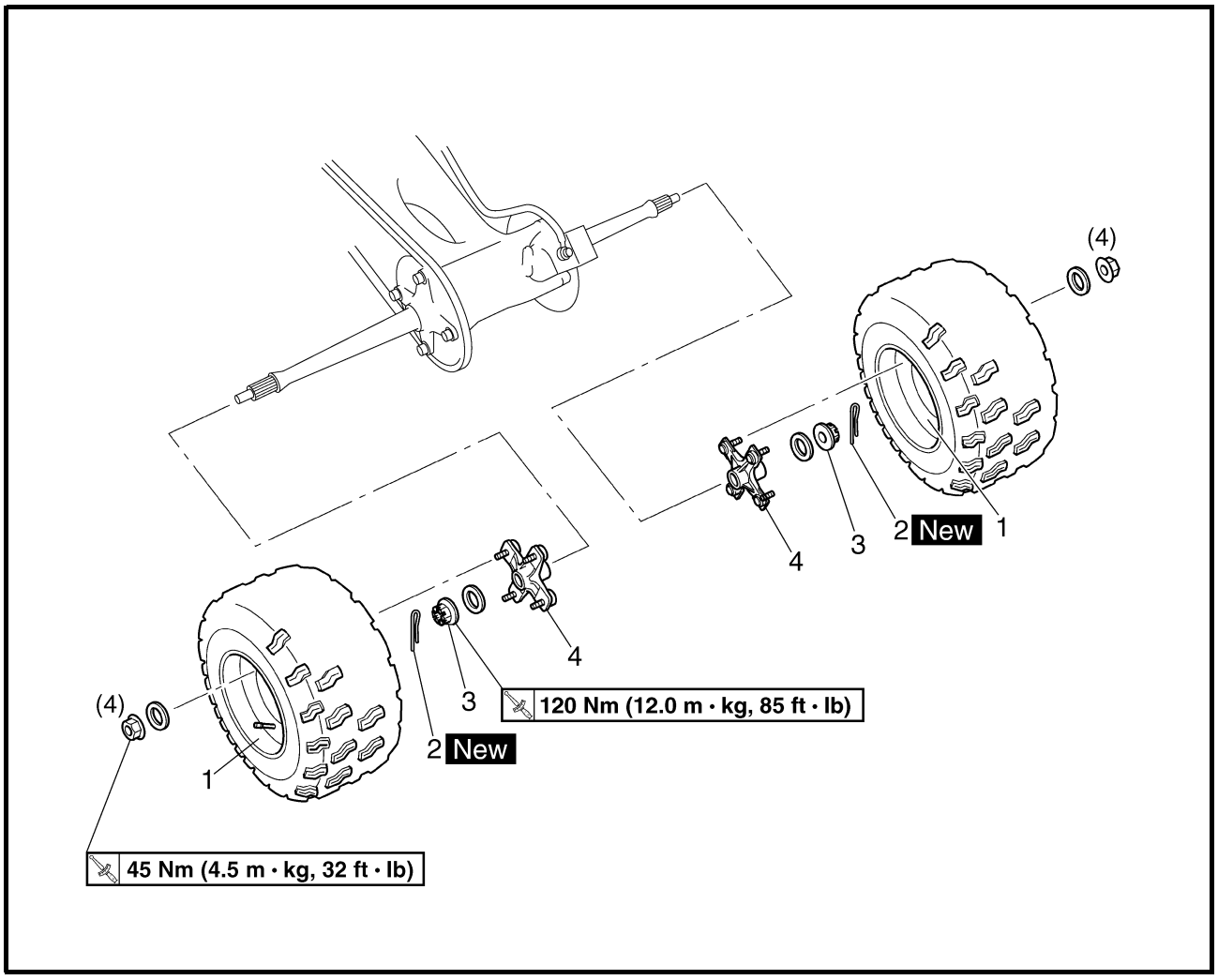

Order	Job/Part	Q'ty	Remarks
	Removing the rear wheels		Remove the parts in the order listed. Place the machine on a level surface. **WARNING** **Securely support the machine so there is no danger of it falling over.**
1	Rear wheel	2	
2	Cotter pin	2	Refer to "INSTALLING THE WHEEL HUBS".
3	Axle nut	2	
4	Wheel hub	2	
			For installation, reverse the removal procedure.

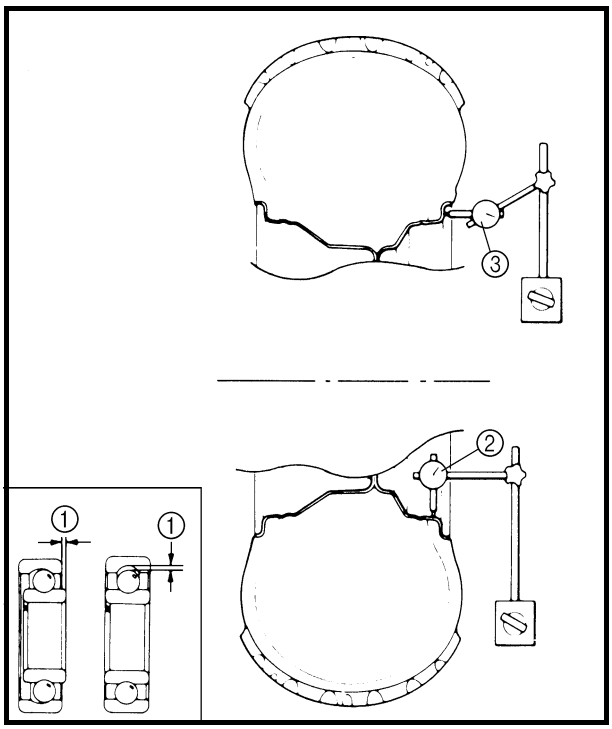

EBS00383

CHECKING THE WHEELS

1. Check:
   - wheels
2. Measure:
   - wheel runout
     Over the specified limit → Replace the wheel or check the wheel bearing play ①.

Wheel runout limit
Radial ②: 2.0 mm (0.08 in)
Lateral ③: 2.0 mm (0.08 in)

3. Check:
   - wheel balance
     Out of balance → Adjust.

WARNING

After replacing the tire, ride conservatively to allow the tire to be properly seated in the rim. Failure to do so may cause an accident resulting in machine damage and possible operator injury.

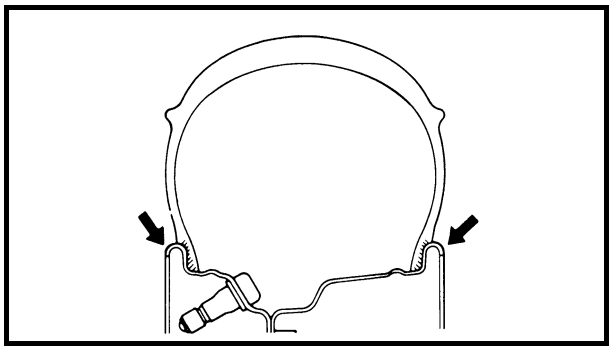

A

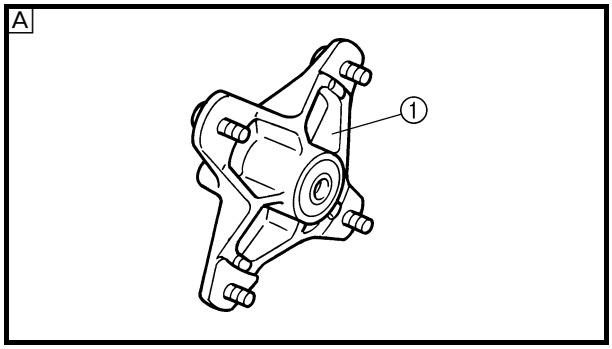

B

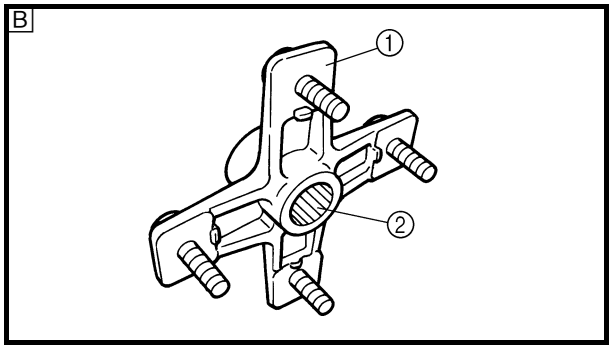

EBS00385

CHECKING THE WHEEL HUBS

1. Check:
   - wheel hubs ①
     Cracks/damage → Replace.
   - splines (wheel hub) ②
     Wear/damage → Replace the wheel hub.

A Front
B Rear

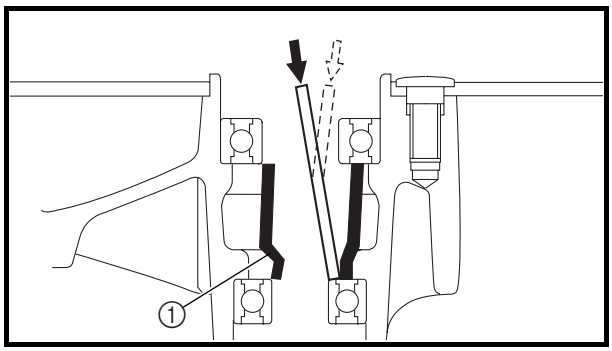

2. Check:
   - wheel bearings
     Wheel hub play/wheel turns roughly → Replace.

▼▼▼▼▼▼▼▼▼▼▼▼▼▼▼▼▼▼▼▼▼▼▼▼▼▼▼▼▼▼▼▼▼▼

a. Clean wheel hub exterior.
b. Drive bearing out by pushing spacer aside and tapping around perimeter of bearing inner race. Use soft metal drift punch and hammer. The spacer ① "floats" between bearings. Remove both bearings as described.

⚠ WARNING

Eye protection is recommended when using striking tools.

c. To install the wheel bearings, reverse the above sequence. Use a socket that matches outside diameter of bearing outer race to drive in bearing.

CAUTION:

Do not strike the center race or balls of the bearing. Contact should be made only with the outer race.

▲▲▲▲▲▲▲▲▲▲▲▲▲▲▲▲▲▲▲▲▲▲▲▲▲▲▲▲▲▲▲▲▲▲

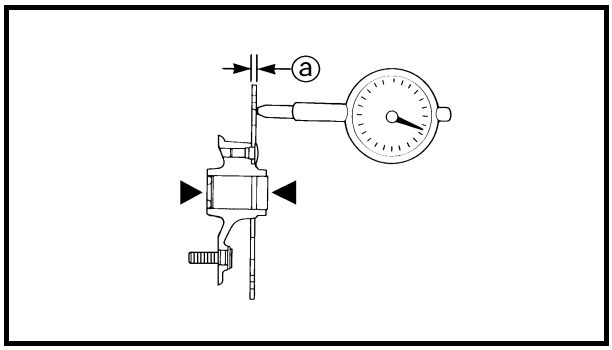

EBS00389

CHECKING THE BRAKE DISCS

1. Check:
   - brake discs
     Galling/damage → Replace.
2. Measure:
   - brake disc deflection
     Out of specification → Check the wheel runout.

Brake disc maximum deflection
Front: 0.10 mm (0.004 in)
Rear: 0.10 mm (0.004 in)

- brake disc thickness ⓐ
  Out of specification → Replace.

Brake disc minimum thickness
3 mm (0.12 in)

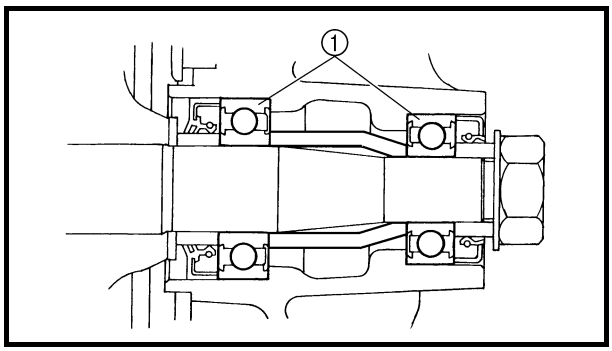

INSTALLING THE FRONT WHEEL HUB BEARINGS

1. Install:
   - bearings ①

NOTE:
Face the oil seal side of the bearing inward.

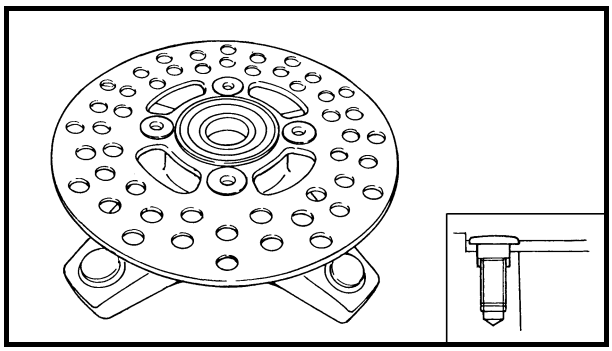

INSTALLING THE FRONT BRAKE DISCS

1. Install:
   - brake discs

NOTE:
Install the brake disc with its spot-faced side facing the bolt heads.

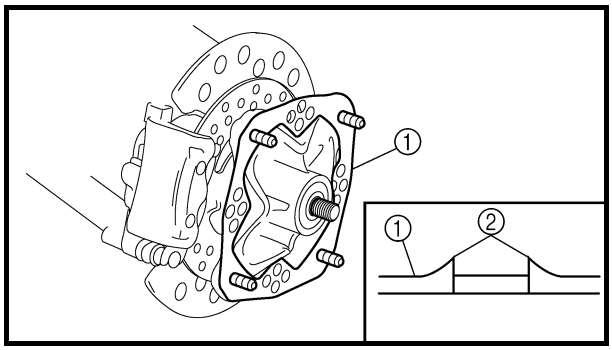

EBS00392

INSTALLING THE FRONT WHEELS

1. Install:
   - brake disc guards (outer) ①

NOTE:
Install the brake disc guard (outer) with punched burrs ② on the wheel hub side.

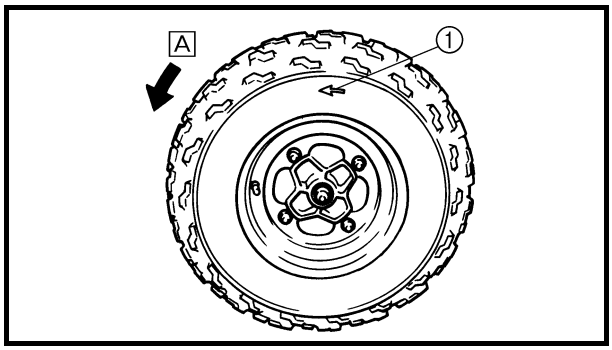

2. Install:
   - wheels

NOTE:
The arrow mark ① on the must point in the direction of rotation [A] of the wheel.

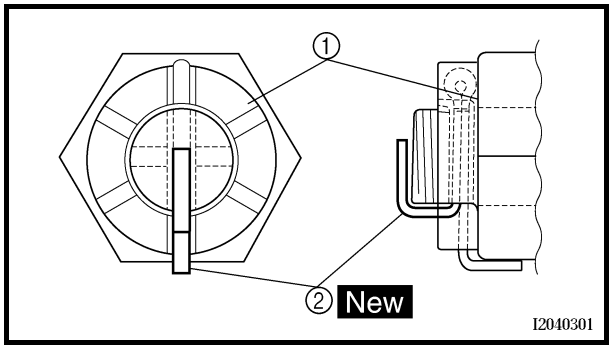

EBS00390

INSTALLING THE WHEEL HUBS

1. Install:
   - front axle nuts ①
     70 Nm (7.0 m · kg, 50 ft · lb)
   - rear axle nuts ①
     120 Nm (12.0 m · kg, 85 ft · lb)
   - cotter pins ② New

NOTE:

Do not loosen the axle nut after torquing it. If the axle nut groove is not aligned with the cotter pin hole, align the groove with the hole by tightening the axle nut.

EBS00382

REAR AXLE AND REAR AXLE HUB

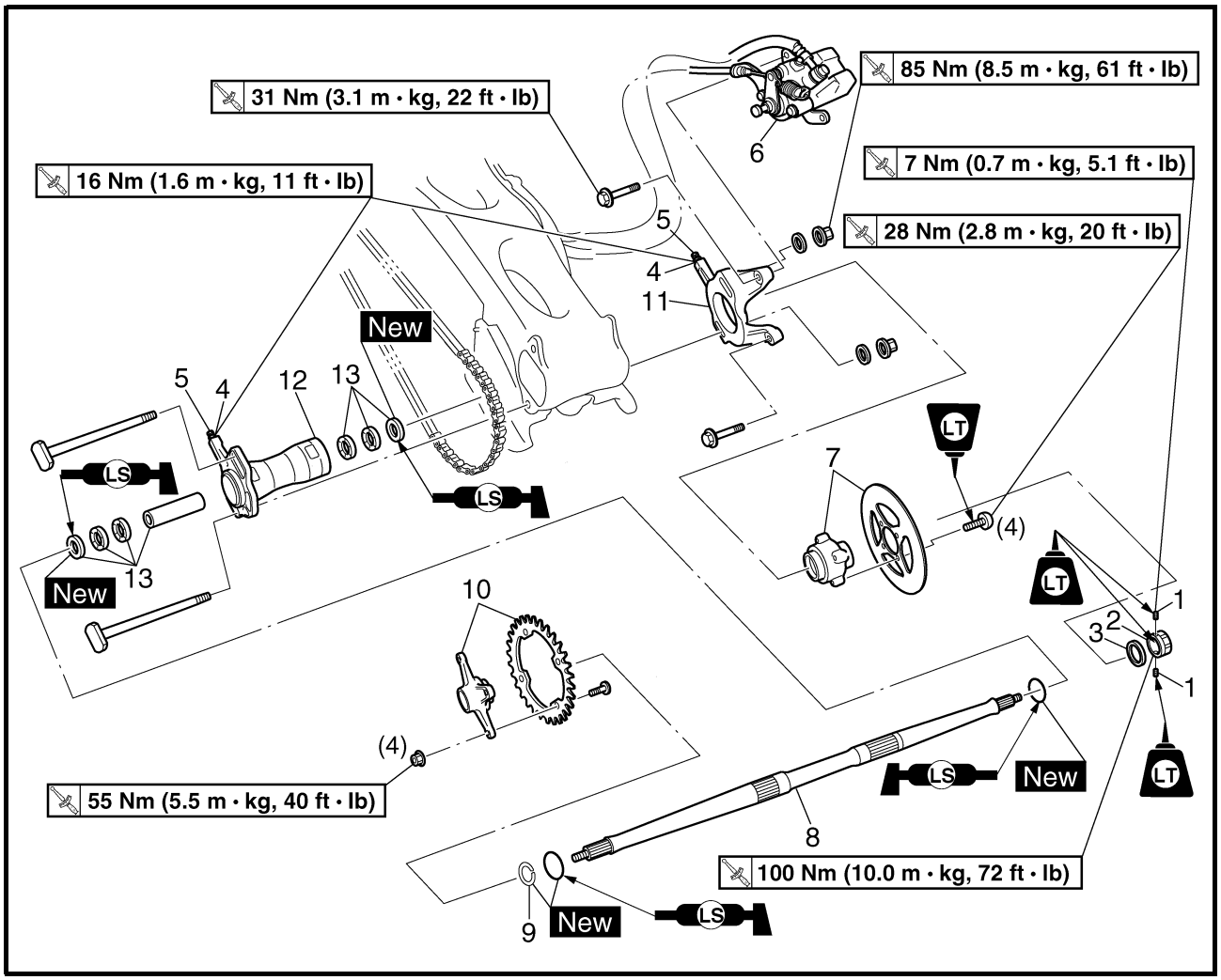

Order	Job/Part	Q'ty	Remarks
	Removing the rear axle and rear axle hub		Remove the parts in the order listed.
	Rear wheels/rear wheel hubs		Refer to "FRONT AND REAR WHEELS".
1	Bolt	2	Refer to "REMOVING THE REAR AXLE" and "INSTALLING THE REAR AXLE".
2	Nut	1	
3	Conical spring washer	1	
4	Locknut	2	
5	Adjusting bolt	2	
6	Brake caliper	1	**NOTE:** Do not apply the brake pedal and do not use the parking brake when the brake caliper is off of the brake disc as the brake pad will be force shut.

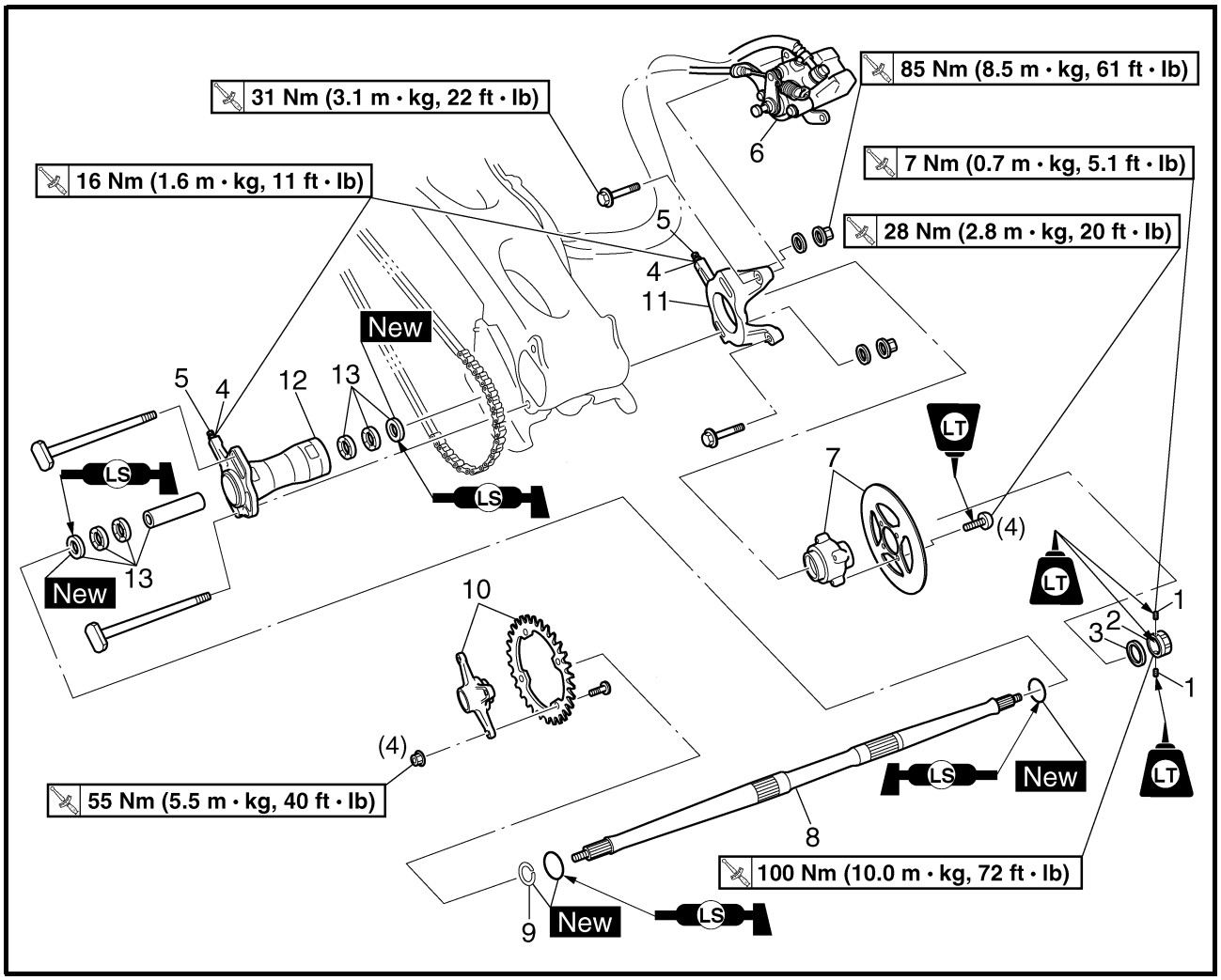

Order	Job/Part	Q'ty	Remarks
7	Brake disc/brake disc bracket	1/1	Refer to "REMOVING THE REAR AXLE".
8	Rear axle	1	
9	Circlip	1	
10	Driven sprocket/sprocket bracket	1/1	Refer to "INSTALLING THE DRIVEN SPROCKET".
11	Brake caliper bracket	1	
12	Rear axle hub	1	
13	Spacer/bearing/oil seal	1/2/2	Refer to "INSTALLING THE FRONT WHEEL HUB BEARINGS". For installation, reverse the removal procedure.

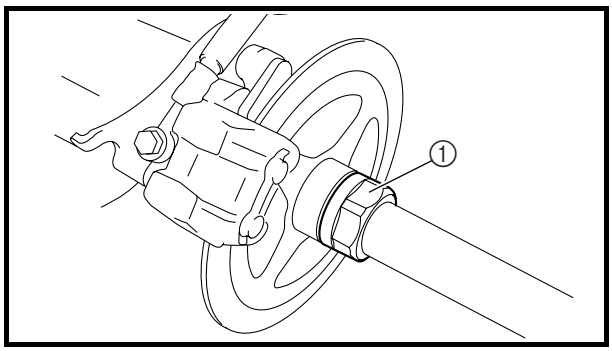

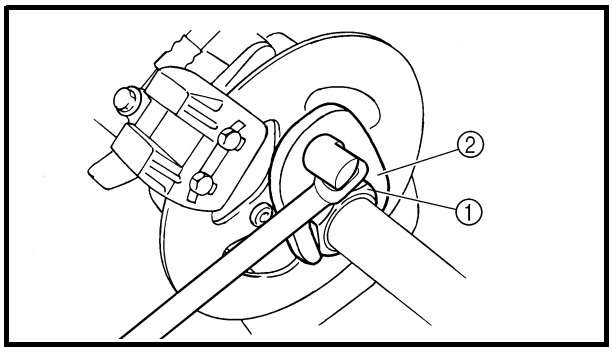

EBS00393

REMOVING THE REAR AXLE

1. Place the machine on a level surface.
2. Remove:
   - bolts
3. Loosen:
   - nut ①

NOTE:

- Apply the brake pedal so that the rear axle does not turn, when loosening the nut.
- Use the PTT wrench 46 or axle nut wrench (46 mm) ②.

PTT wrench 46
P/N. 90890-06588
Axle nut wrench (46 mm)
P/N. YM-37134

4. Elevate the rear wheels by placing the suitable stand under the frame.
5. Remove:
   - rear wheels
   - wheel hubs
   - nuts
   - washers

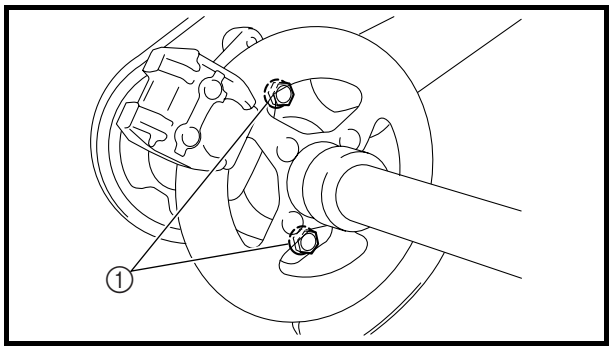

6. Loosen:
   - rear axle hub nuts ①

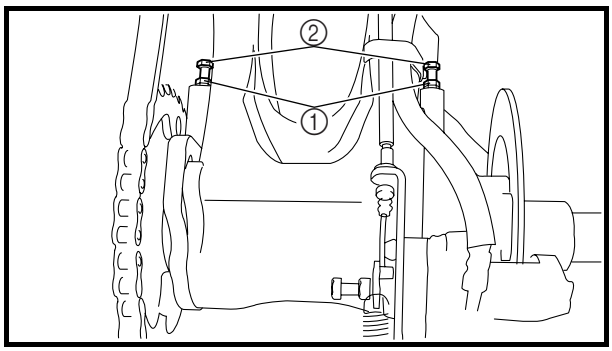

7. Loosen:
   - locknuts ①
   - adjusting bolts ②

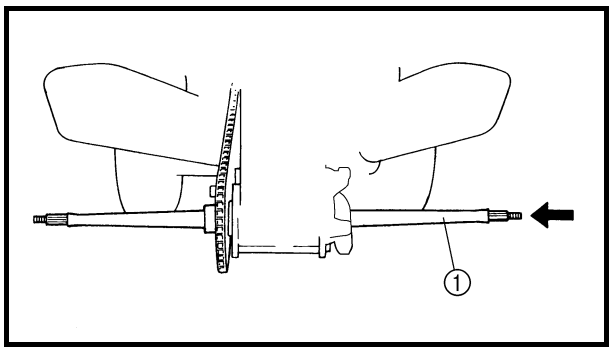

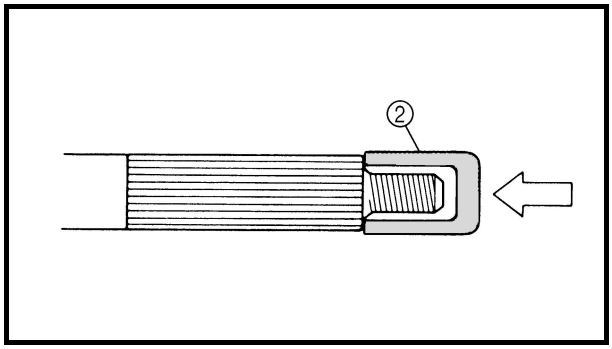

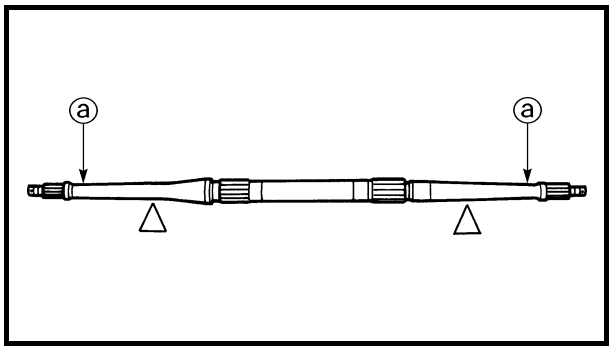

8. Remove:
   - rear axle ①
     (with driven sprocket)

CAUTION:

- **Never directly tap the axle end with a hammer, since this will result in damage to the axle thread and spline.**
- **Attach a suitable socket ② on the axle end and tap it with a soft hammer, then pull out the rear axle to the right.**

9. Remove:
   - circlip
   - driven sprocket bracket

EBS00395

CHECKING THE REAR AXLE

1. Check:
   - rear axle runout ⓐ
     Out of specification → Replace.

WARNING

Do not attempt to straighten a bent axle.

Rear axle runout limit
1.5 mm (0.06 in)

CHECKING THE DRIVEN SPROCKET

1. Check:
   - driven sprocket
     Refer to “SWINGARM AND DRIVE CHAIN”.

CHECKING THE BRAKE DISC

1. Check:
   - brake disc
     Refer to “FRONT AND REAR WHEELS”.

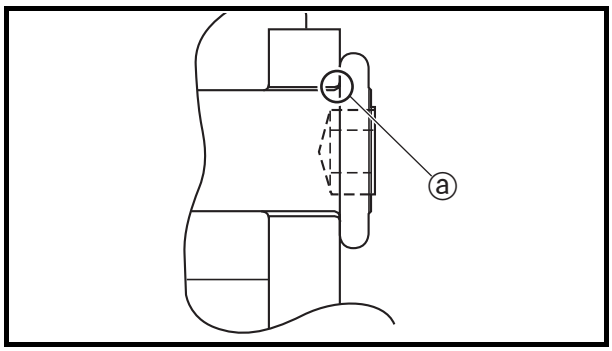

INSTALLING THE DRIVEN SPROCKET

1. Install:
   - driven sprocket

NOTE:

Make sure that the blunt-edged corner ⓐ of the driven sprocket is facing outward.

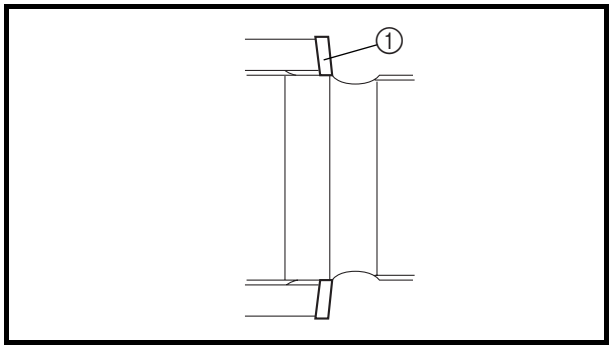

EBS00397

INSTALLING THE REAR AXLE

1. Install:
   - conical spring washer ①

NOTE:

Install the conical spring washer with the convex side of the washer facing outward as shown.

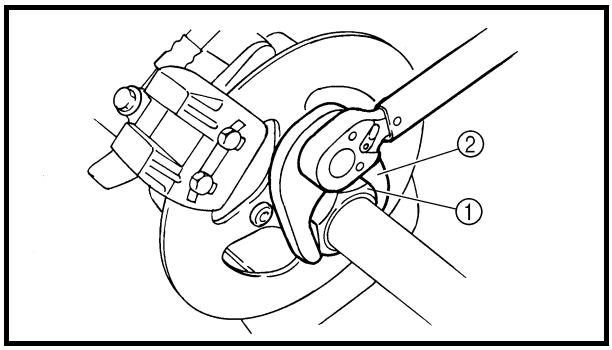

2. Tighten:
   - nut ①

▼▼▼▼▼▼▼▼▼▼▼▼▼▼▼▼▼▼▼▼▼▼▼▼▼▼▼▼▼▼▼▼▼▼

a. Tighten the nut with PTT wrench 46 or rear axle nut wrench ② to specification while holding the rear axle.

PTT wrench 46
P/N. 90890-06588
Axle nut wrench (46 mm)
P/N. YM-37134

Nut
100 Nm (10.0 m · kg, 72 ft · lb)
LOCTITE®

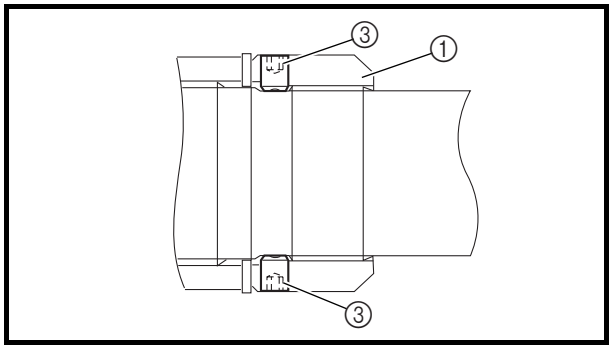

b. Tighten bolts ③.

Bolt
7 Nm (0.7 m · kg, 5.1 ft · lb)
LOCTITE®

▲▲▲▲▲▲▲▲▲▲▲▲▲▲▲▲▲▲▲▲▲▲▲▲▲▲▲▲▲▲▲▲▲▲

EBS00400

FRONT AND REAR BRAKES

FRONT BRAKE PADS

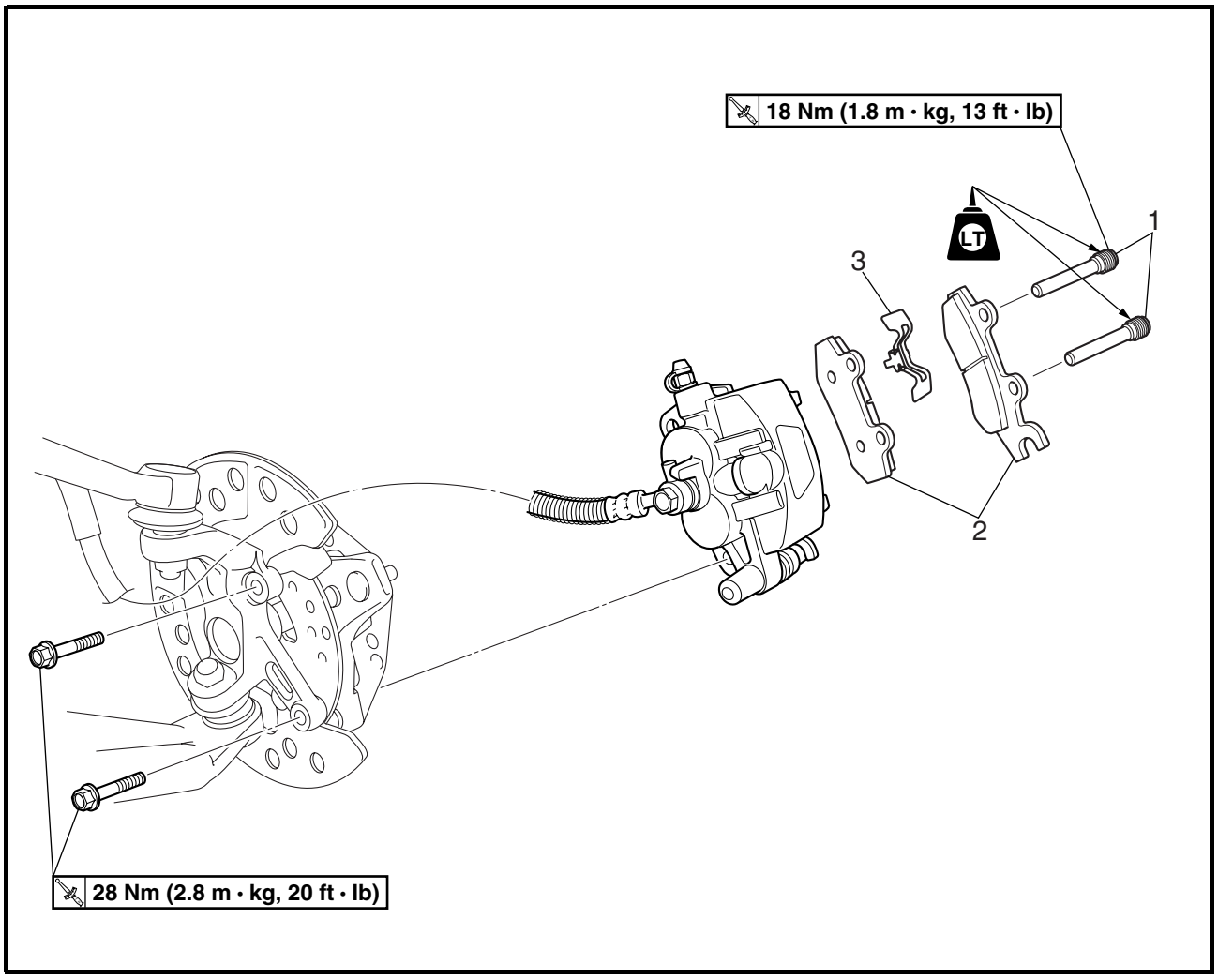

Order	Job/Part	Q'ty	Remarks
	Removing the front brake pads		Remove the parts in the order listed. The following procedure applies to both of the front brake calipers.
	Front wheel		Refer to "FRONT AND REAR WHEELS".
1	Brake pad retaining bolt	2	Refer to "REPLACING THE FRONT BRAKE PADS".
2	Brake pad	2	
3	Brake pad spring	1	
			For installation, reverse the removal procedure.

EBS00401
REAR BRAKE PADS

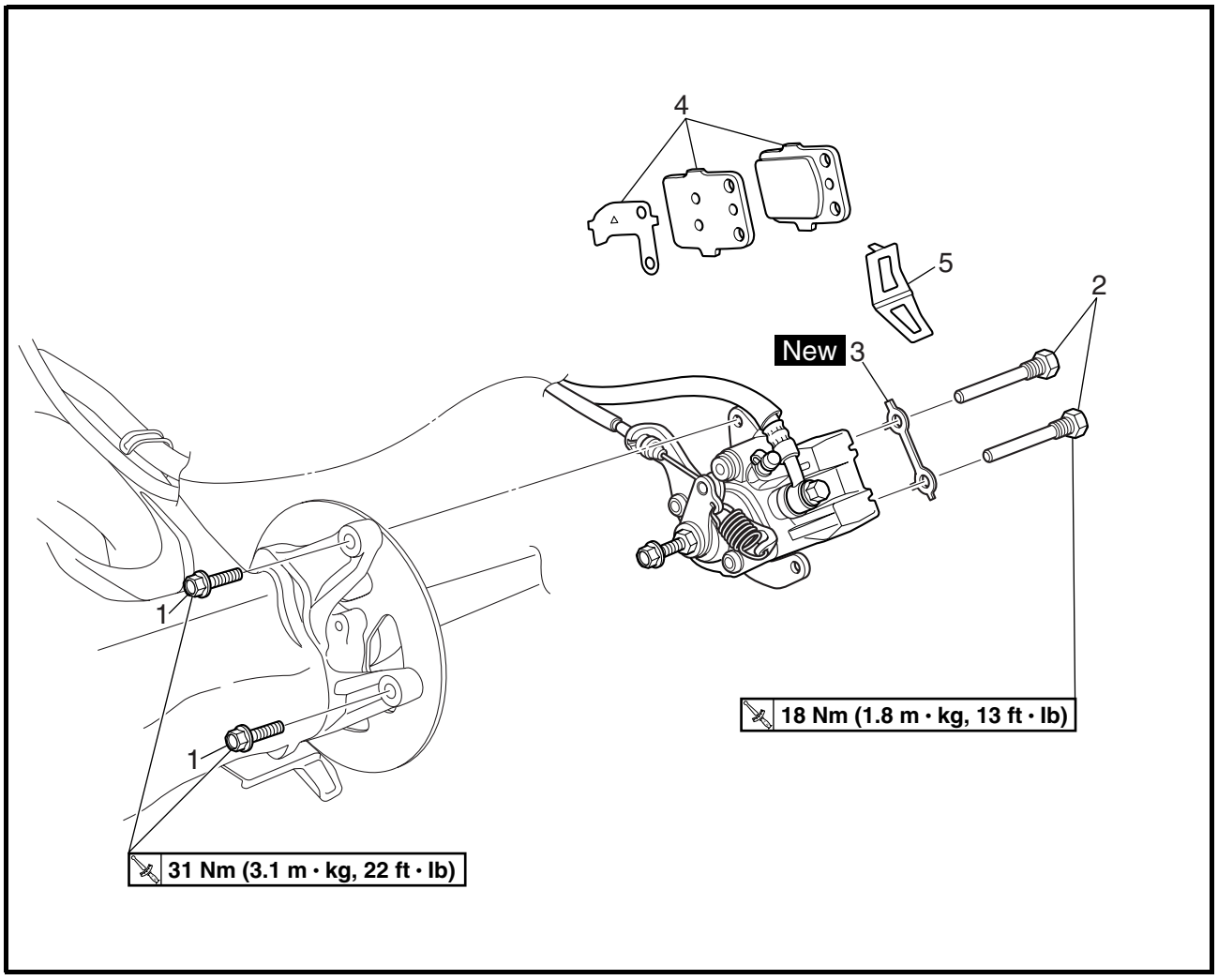

Order	Job/Part	Q'ty	Remarks
	Removing the rear brake pads		Remove the parts in the order listed.
1	Brake caliper mounting bolt	2	Refer to "REPLACING THE REAR BRAKE PADS".
2	Brake pad retaining bolt	2	
3	Lock washer	1	
4	Brake pad/pad shim	2/1	
5	Brake pad spring	1	
			For installation, reverse the removal procedure.

EBS00402

CAUTION:

Disc brake components rarely require disassembly.
DO NOT:
- **disassemble components unless absolutely necessary;**
- **use solvents on internal brake components;**
- **use spent brake fluid for cleaning; (use only clean brake fluid)**
- **allow brake fluid to come in contact with the eyes, as this may cause eye injury;**
- **splash brake fluid onto painted surfaces or plastic parts, as this may cause damage;**
- **disconnect any hydraulic connection, as this would require the entire brake system to be disassembled, drained, cleaned, properly filled and bled after reassembly.**

EBS00404

REPLACING THE FRONT BRAKE PADS

The following procedure applies to both of the front brake calipers.

NOTE:

It is not necessary to disassemble the brake calipers and brake hoses to replace the brake pads.

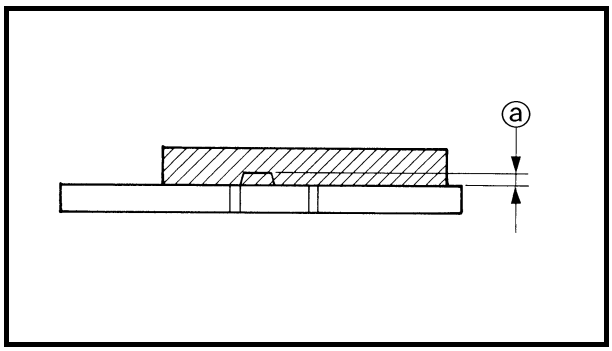

1. Remove:
   - brake pads

ⓐ Wear limit

NOTE:

Replace the brake pads as a set if either is found to be worn to the wear limit.

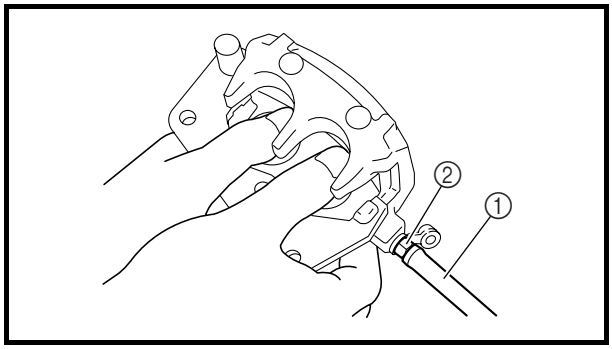

2. Install:
   - brake pads
   - brake pad spring

NOTE:
Always install new brake pads and brake pad spring as a set.

▼▼▼▼▼▼▼▼▼▼▼▼▼▼▼▼▼▼▼▼▼▼▼▼▼▼▼▼▼▼▼▼▼▼

a. Connect a suitable hose ① tightly to the brake caliper bleed screw ②. Put the other end of this hose into an open container.
b. Loosen the brake caliper bleed screw and, using a finger, push the caliper piston into the brake caliper.
c. Tighten the brake caliper bleed screw.

	**Brake caliper bleed screw** **6 Nm (0.6 m · kg, 4.3 ft · lb)**

d. Install new brake pads and a new brake pad spring.
e. Install the retaining bolts and brake caliper.

	**Brake pad retaining bolt** **18 Nm (1.8 m · kg, 13 ft · lb)** **Brake caliper mounting bolt** **28 Nm (2.8 m · kg, 20 ft · lb)**

▲▲▲▲▲▲▲▲▲▲▲▲▲▲▲▲▲▲▲▲▲▲▲▲▲▲▲▲▲▲▲▲▲▲

3. Check:
   - brake fluid level
     Refer to “CHECKING THE BRAKE FLUID LEVEL” in chapter 3.
4. Check:
   - brake lever operation
     Soft or spongy feeling → Bleed the brake system.
     Refer to “BLEEDING THE HYDRAULIC BRAKE SYSTEM” in chapter 3.

EBS00405

REPLACING THE REAR BRAKE PADS

NOTE:
It is not necessary to disassemble the brake caliper and brake hose to replace the brake pads.

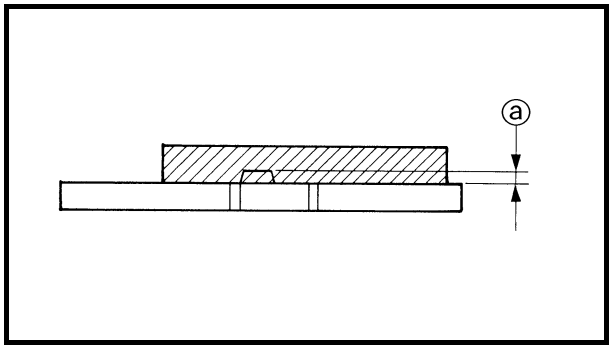

1. Remove:
   - brake pads

ⓐ wear limit

NOTE:
Replace the brake pads as a set if either is found to be worn to the wear limit.

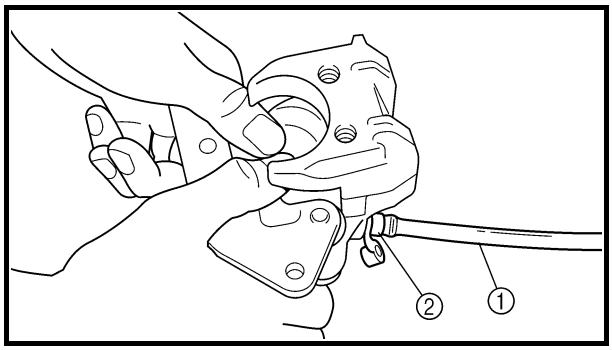

2. Install:
   - brake pads
   - brake pad spring

NOTE:
Always install new brake pads, brake pad shim and brake pad spring as a set.

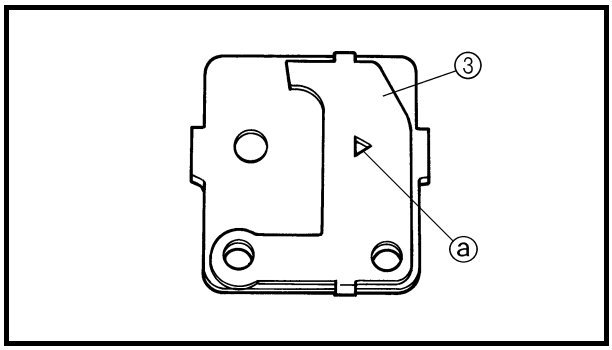

▼▼▼▼▼▼▼▼▼▼▼▼▼▼▼▼▼▼▼▼▼▼▼▼▼▼▼▼▼▼▼▼▼▼

a. Connect a suitable hose ① tightly to the brake caliper bleed screw ②. Put the other end of this hose into an open container.
b. Loosen the brake caliper bleed screw and, using a finger, push the caliper piston into the brake caliper.
c. Tighten the brake caliper bleed screw.

	**Brake caliper bleed screw** **6 Nm (0.6 m · kg, 4.3 ft · lb)**

d. Install a new brake pad spring, new pad shim ③ and new brake pads.

NOTE:
- The pad shim must be installed toward the piston.
- The arrow mark ⓐ on the pad shim must point in the direction of the disc rotation.

e. Install the retaining bolts and brake caliper.

	**Brake pad retaining bolt** **18 Nm (1.8 m · kg, 13 ft · lb)** **Brake caliper mounting bolt** **31 Nm (3.1 m · kg, 22 ft · lb)**

f. Bend the lock washer tabs along a flat side of the bolts.

▲▲▲▲▲▲▲▲▲▲▲▲▲▲▲▲▲▲▲▲▲▲▲▲▲▲▲▲▲▲▲▲▲▲

3. Check:
   - brake fluid level
     Refer to “CHECKING THE BRAKE FLUID LEVEL” in chapter 3.
4. Check:
   - brake lever or brake pedal operation
     Soft or spongy feeling → Bleed the brake system.
     Refer to “BLEEDING THE HYDRAULIC BRAKE SYSTEM” in chapter 3.

EBS00407

FRONT BRAKE MASTER CYLINDER

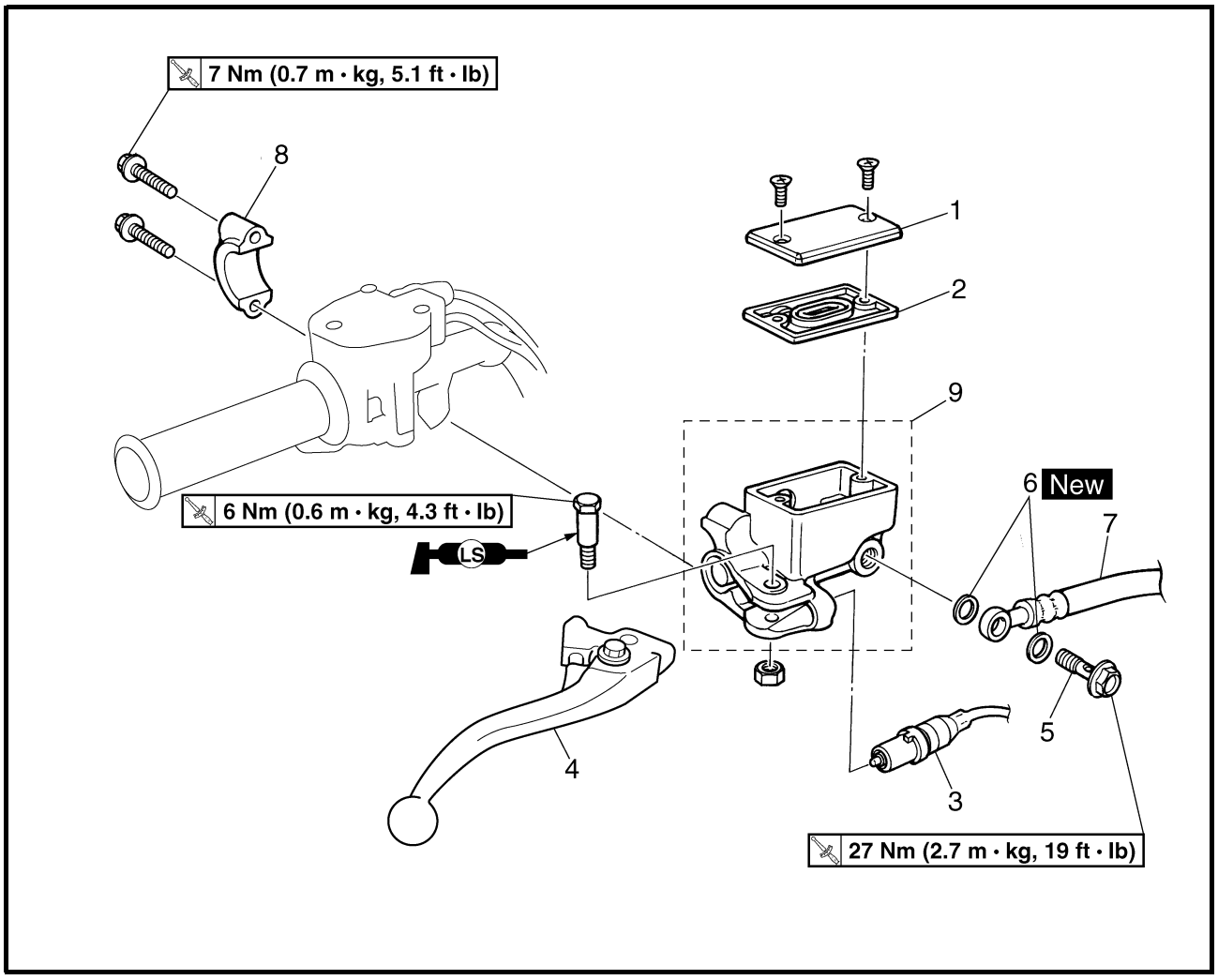

Order	Job/Part	Q'ty	Remarks
	Removing the front brake master cylinder		Remove the parts in the order listed.
	Brake fluid		Drain.
1	Brake fluid reservoir cap	1	
2	Brake fluid reservoir diaphragm	1	
3	Front brake light switch	1	
4	Brake lever	1	
5	Union bolt	1	Disconnect. Refer to "INSTALLING THE FRONT BRAKE MASTER CYLINDER".
6	Copper washer	2	
7	Brake hose	1	
8	Brake master cylinder bracket	1	
9	Brake master cylinder	1	
			For installation, reverse the removal procedure.

EBS00409

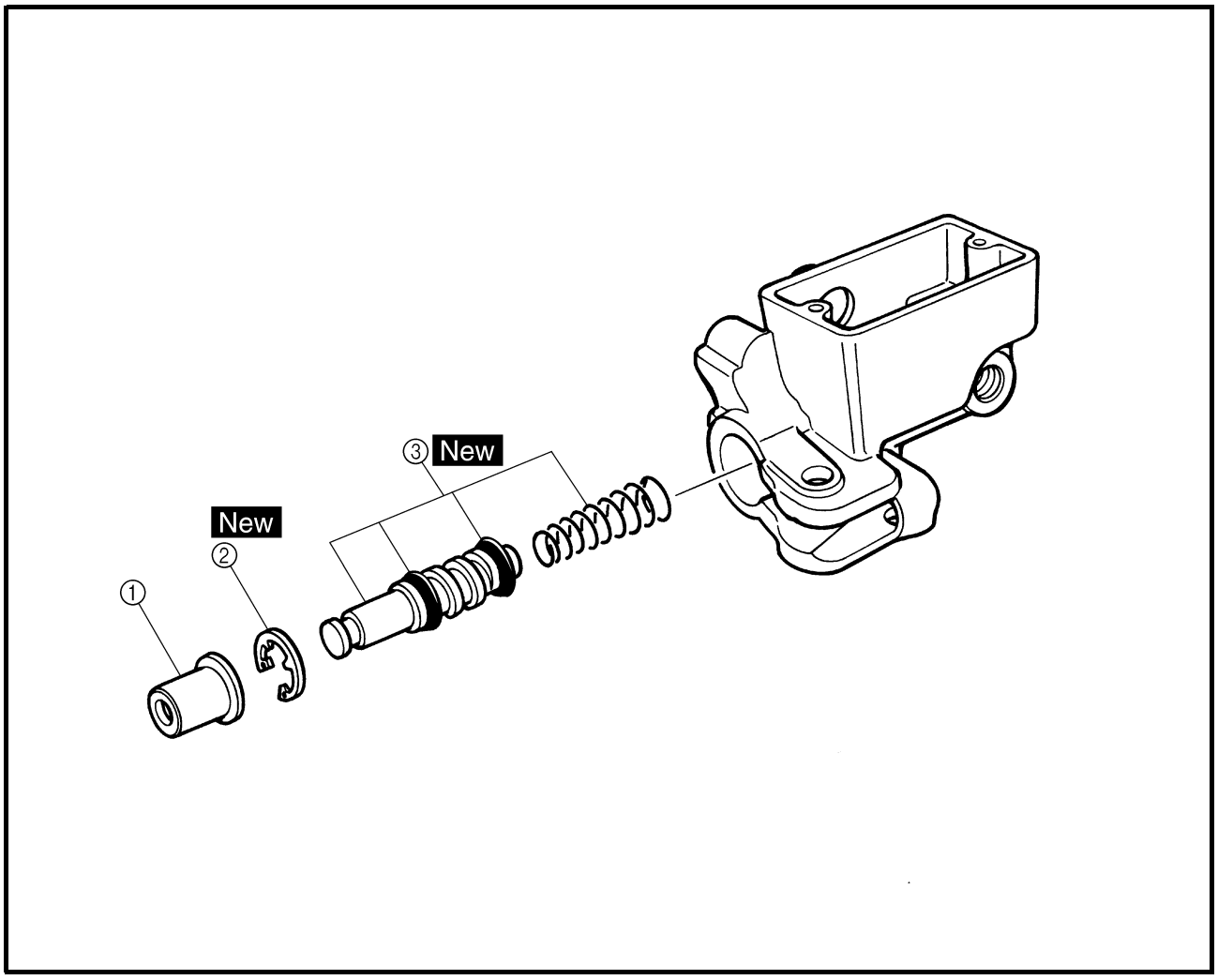

Order	Job/Part	Q'ty	Remarks
	Disassembling the front brake master cylinder		Remove the parts in the order listed.
①	Dust boot	1	Refer to "ASSEMBLING THE FRONT BRAKE MASTER CYLINDER".
②	Circlip	1	
③	Brake master cylinder kit	1	
			For assembly, reverse the disassembly procedure.

EBS00410
REAR BRAKE MASTER CYLINDER

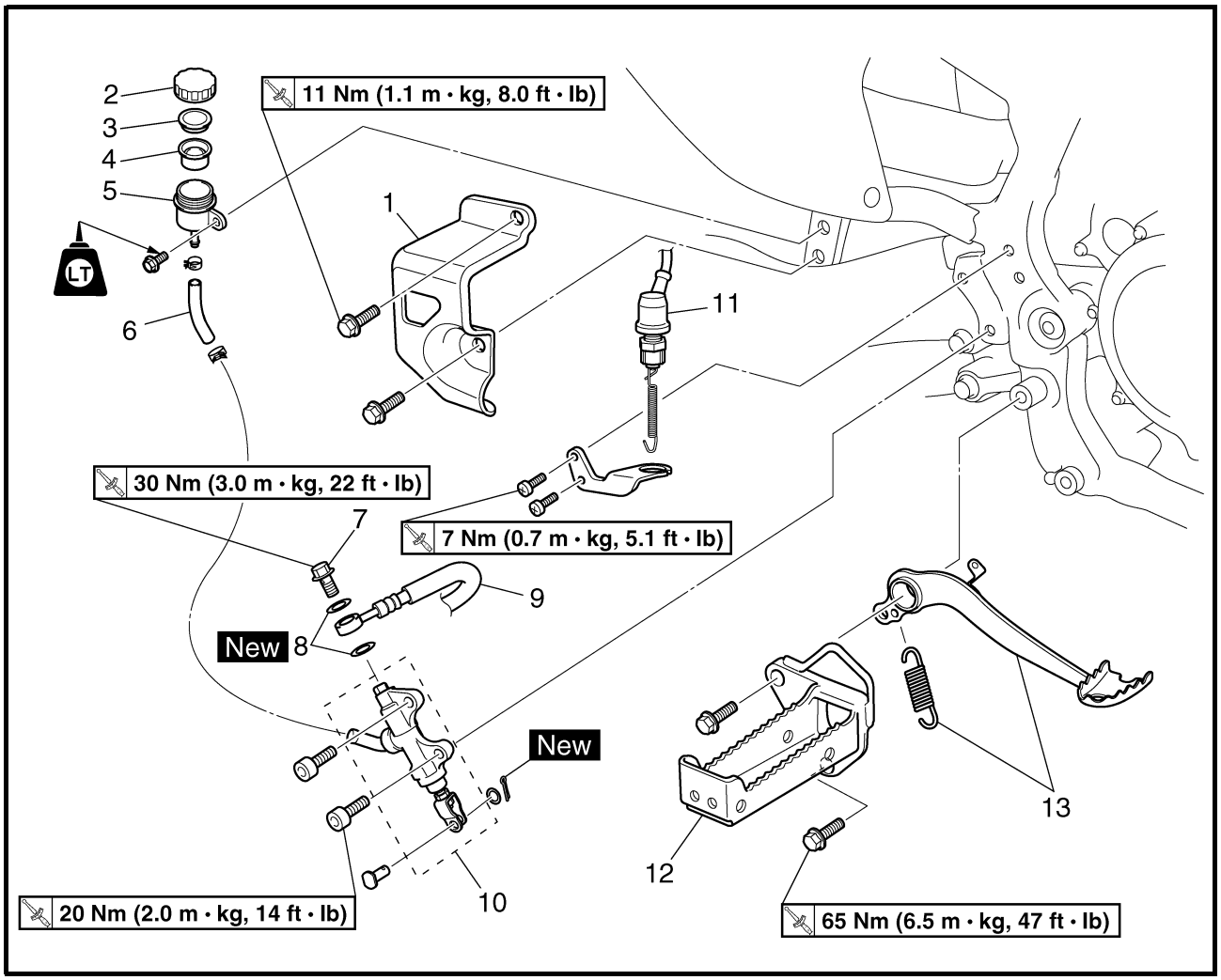

Order	Job/Part	Q'ty	Remarks
	Removing the rear brake master cylinder		Remove the parts in the order listed.
	Right foot protector		Refer to "SEAT, FENDERS AND FUEL TANK" in chapter 3.
	Brake fluid		Drain.
1	Brake fluid reservoir cover	1	
2	Brake fluid reservoir cap	1	
3	Brake fluid reservoir diaphragm holder	1	
4	Brake fluid reservoir diaphragm	1	
5	Brake fluid reservoir	1	
6	Brake fluid reservoir hose	1	

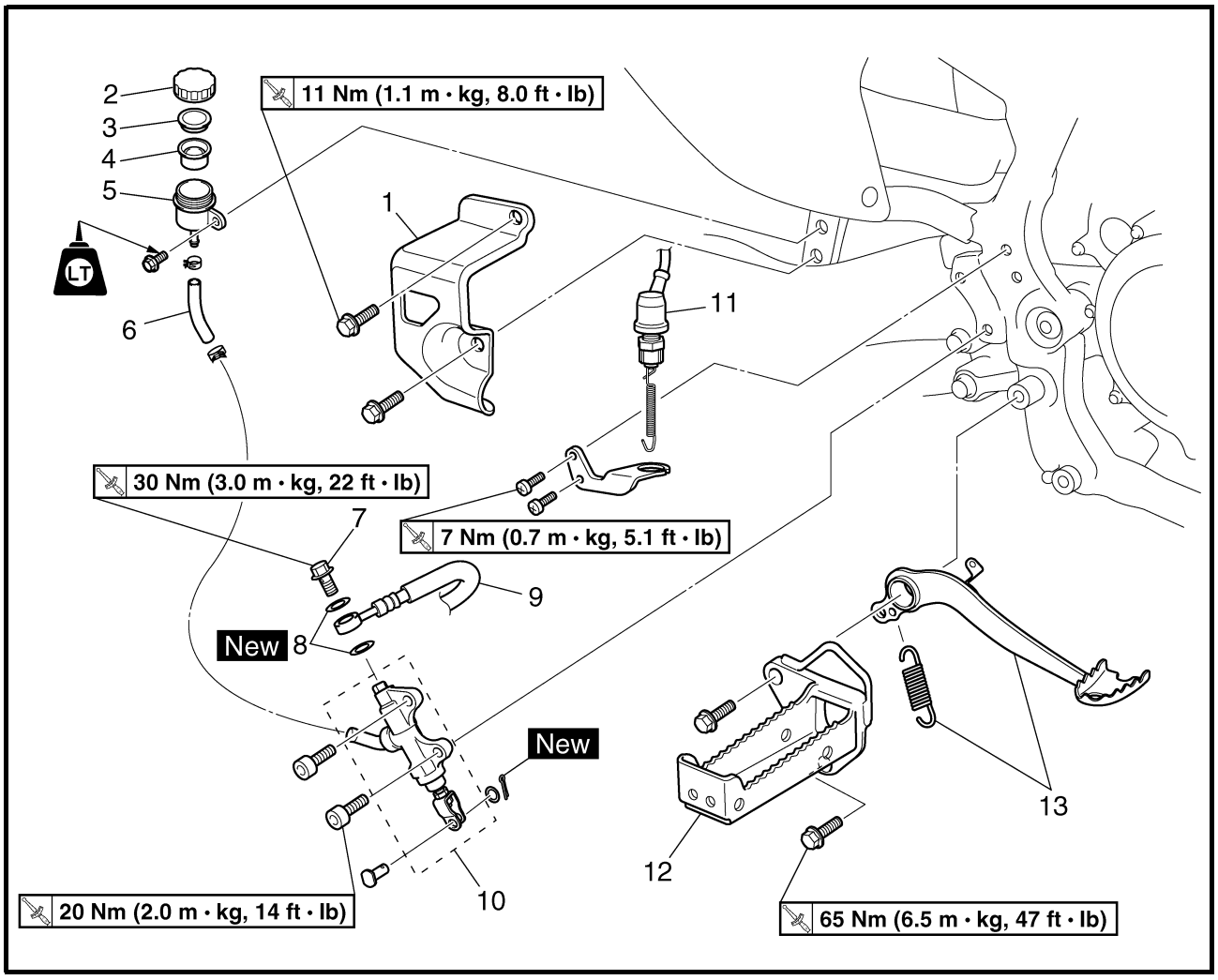

Order	Job/Part	Q'ty	Remarks
7	Union bolt	1	Disconnect. Refer to "INSTALLING THE REAR BRAKE MASTER CYLINDER".
8	Copper washer	2	
9	Brake hose	1	
10	Brake master cylinder	1	
11	Rear brake light switch	1	
12	Right footrest	1	
13	Brake pedal/spring	1/1	
			For installation, reverse the removal procedure.

EBS00411

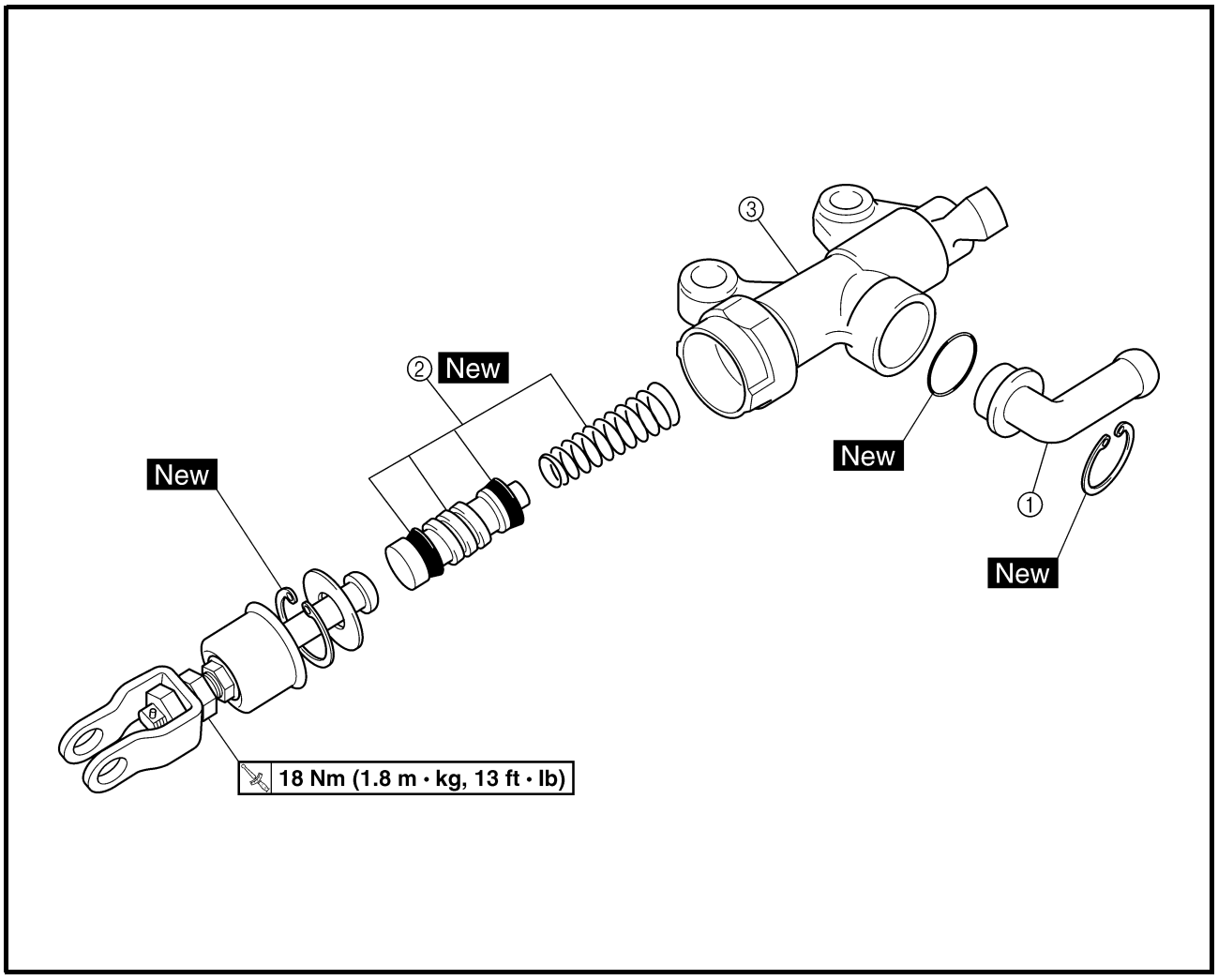

Order	Job/Part	Q'ty	Remarks
	Disassembling the rear brake master cylinder		Remove the parts in the order listed.
①	Hose joint	1	
②	Brake master cylinder kit	1	Refer to "ASSEMBLING THE REAR BRAKE MASTER CYLINDER".
③	Brake master cylinder	1	
			For assembly, reverse the disassembly procedure.

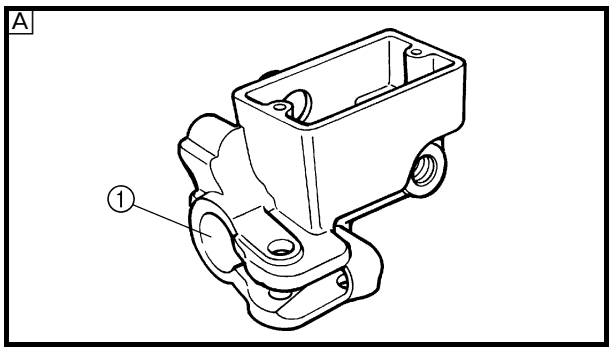

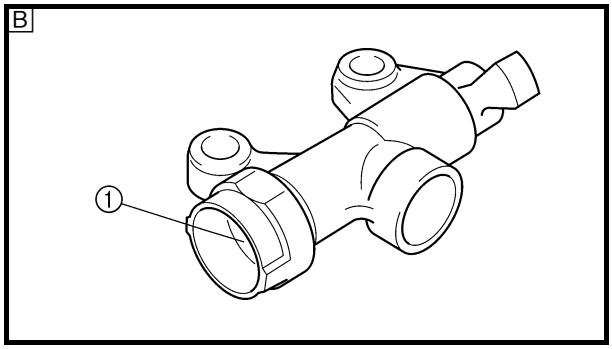

EBS00413

CHECKING THE MASTER CYLINDERS

1. Check:
   - brake master cylinder ①
     Wear/scratches → Replace the brake master cylinder assembly.
   - brake master cylinder body
     Cracks/damage → Replace.
   - brake fluid delivery passage
     (brake master cylinder body)
     Blockage → Blow out with compressed air.

A Front
B Rear

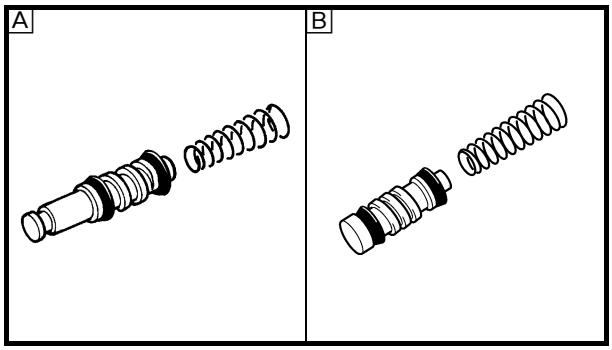

2. Check:
   - brake master cylinder kit
     Scratches/wear/damage → Replace as a set.

A Front
B Rear

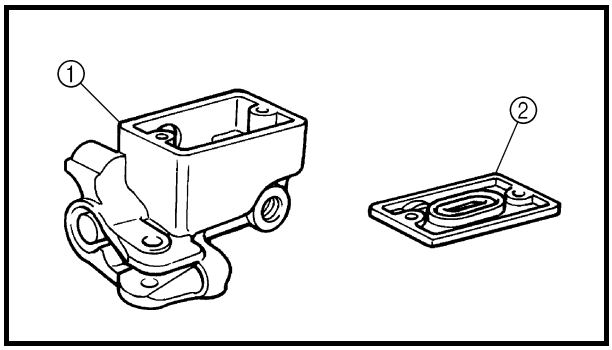

3. Check:
   - front brake master cylinder reservoir ①
   - front brake master cylinder reservoir diaphragm ②
     Cracks/damage → Replace.

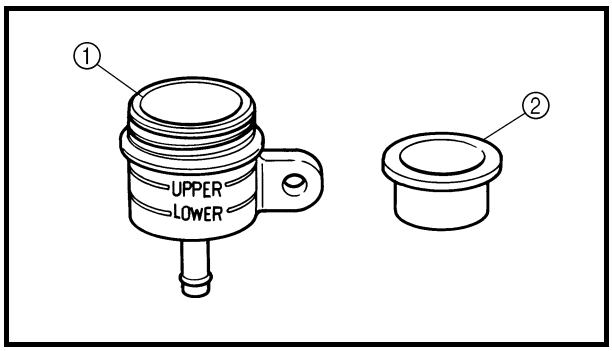

4. Check:
   - rear brake fluid reservoir ①
   - rear brake fluid reservoir diaphragm ②
     Cracks/damage → Replace.

EBS00415

ASSEMBLING THE FRONT BRAKE MASTER CYLINDER

WARNING

- **All internal brake components should be cleaned and lubricated with new brake fluid only before installation.**

Recommended brake fluid
DOT 4

- **Whenever a master cylinder is disassembled, replace the piston seals and dust seals.**

EBS00416

ASSEMBLING THE REAR BRAKE MASTER CYLINDER

WARNING

- **All internal brake components should be cleaned and lubricated with new brake fluid only before installation.**

Recommended brake fluid
DOT 4

- **Whenever a master cylinder is disassembled, replace the piston seals and dust seals.**

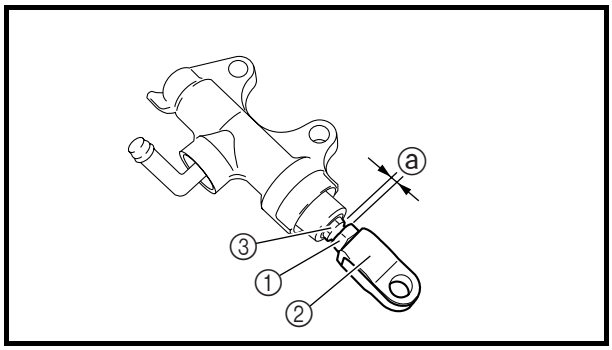

1. Install:
   - brake master cylinder kit
   - nut ①
   - joint ②

NOTE:
Turn the adjusting bolt ③ until the clearance ⓐ is within the specified limits when install the joint ②.

Clearance
2.2 ~ 3.2 mm (0.09 ~ 0.13 in)

2. Tighten:
   - nut ① — **18 Nm (1.8 m · kg, 13 ft · lb)**

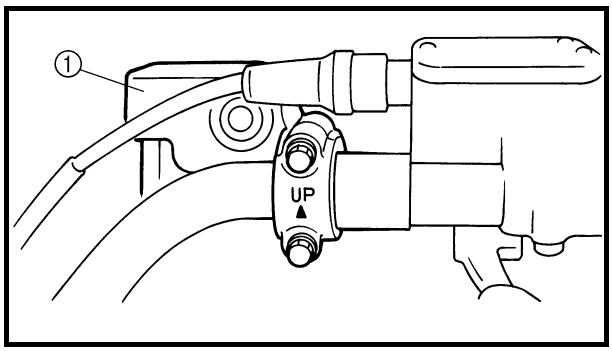

EBS00418

INSTALLING THE FRONT BRAKE MASTER CYLINDER

1. Install:
   - brake master cylinder ①

	7 Nm (0.7 m · kg, 5.1 ft · lb)

NOTE:
- The "UP" mark on the brake master cylinder bracket should face up.
- Install the brake master cylinder so that the gaps between the brake master cylinder and the brake master cylinder bracket are equal.

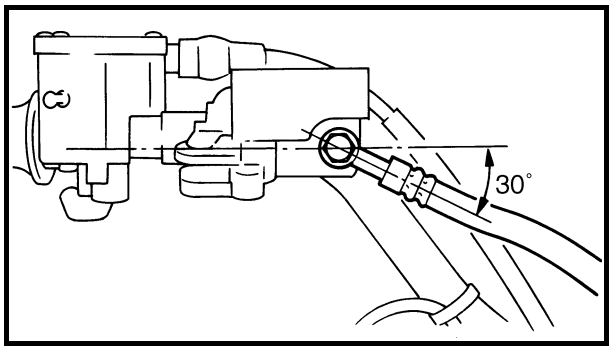

2. Install:
   - copper washers New
   - brake hose
   - union bolt

	27 Nm (2.7 m · kg, 19 ft · lb)

NOTE:
- Tighten the union bolt while holding the brake hose as shown.
- Turn the handlebar to the left and to the right to check that the brake hose does not touch other parts (throttle cable, wire harness, leads, etc.). Correct if necessary.

WARNING

Proper brake hose routing is essential to insure safe machine operation. Refer to "CABLE ROUTING" in chapter 2.

3. Fill:
   - brake fluid reservoir

	Recommended brake fluid **DOT 4**

CAUTION:

Brake fluid may damage painted surfaces or plastic parts. Always clean up spilled brake fluid immediately.

WARNING

- **Use only the designated quality brake fluid: other brake fluids may deteriorate the rubber seals, causing leakage and poor brake performance.**
- **Refill with the same type of brake fluid: mixing brake fluids may result in a harmful reaction and lead to poor brake performance.**
- **Be careful that water does not enter the brake master cylinder when refilling. Water will significantly lower the boiling point of the brake fluid and may result in vapor lock.**

4. Air bleed:
   - brake system
     Refer to "BLEEDING THE HYDRAULIC BRAKE SYSTEM" in chapter 3.
5. Check:
   - brake fluid level
     Brake fluid level is under the "LOWER" level line → Add the recommended brake fluid to the proper level.
     Refer to "CHECKING THE BRAKE FLUID LEVEL" in chapter 3.

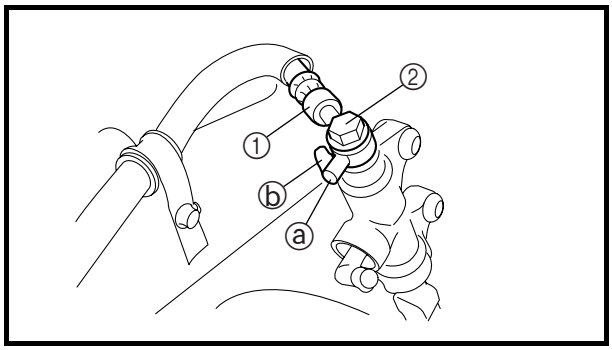

EBS00419

INSTALLING THE REAR BRAKE MASTER CYLINDER

1. Install:
   - copper washers New
   - brake hose ①
   - union bolt ② 30 Nm (3.0 m · kg, 2.2 ft · lb)

CAUTION:

When installing the brake hose onto the brake master cylinder, make sure the brake pipe ⓐ touches the projection ⓑ as shown.

WARNING

Proper brake hose routing is essential to insure safe machine operation. Refer to "CABLE ROUTING" in chapter 2.

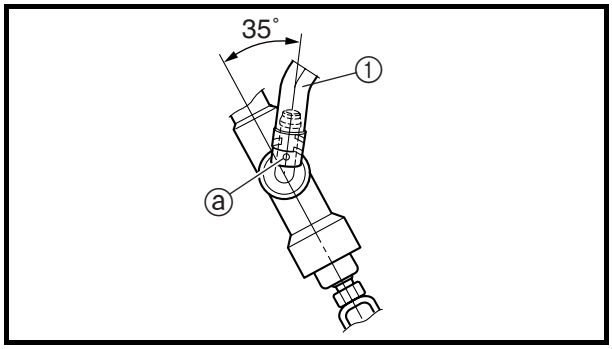

2. Install:
   - brake fluid reservoir hose ①

NOTE:
Install the brake fluid reservoir hose with the white paint mark ⓐ facing up as shown.

3. Fill:
   - brake fluid reservoir

	Recommended brake fluid **DOT 4**

CAUTION:
Brake fluid may damage painted surfaces or plastic parts. Always clean up spilled brake fluid immediately.

WARNING
- **Use only the designated quality brake fluid: other brake fluids may deteriorate the rubber seals, causing leakage and poor brake performance.**
- **Refill with the same type of brake fluid: mixing brake fluids may result in a harmful chemical reaction and lead to poor brake performance.**
- **Be careful that water does not enter the brake master cylinder when refilling. Water will significantly lower the boiling point of the brake fluid and may result in vapor lock.**

4. Air bleed:
   - brake system
     Refer to “BLEEDING THE HYDRAULIC BRAKE SYSTEM” in chapter 3.
5. Check:
   - brake fluid level
     Brake fluid level is under the “LOWER” level line → Add the recommended brake fluid to the proper level.
     Refer to “CHECKING THE BRAKE FLUID LEVEL” in chapter 3.

EBS00421
FRONT BRAKE CALIPERS

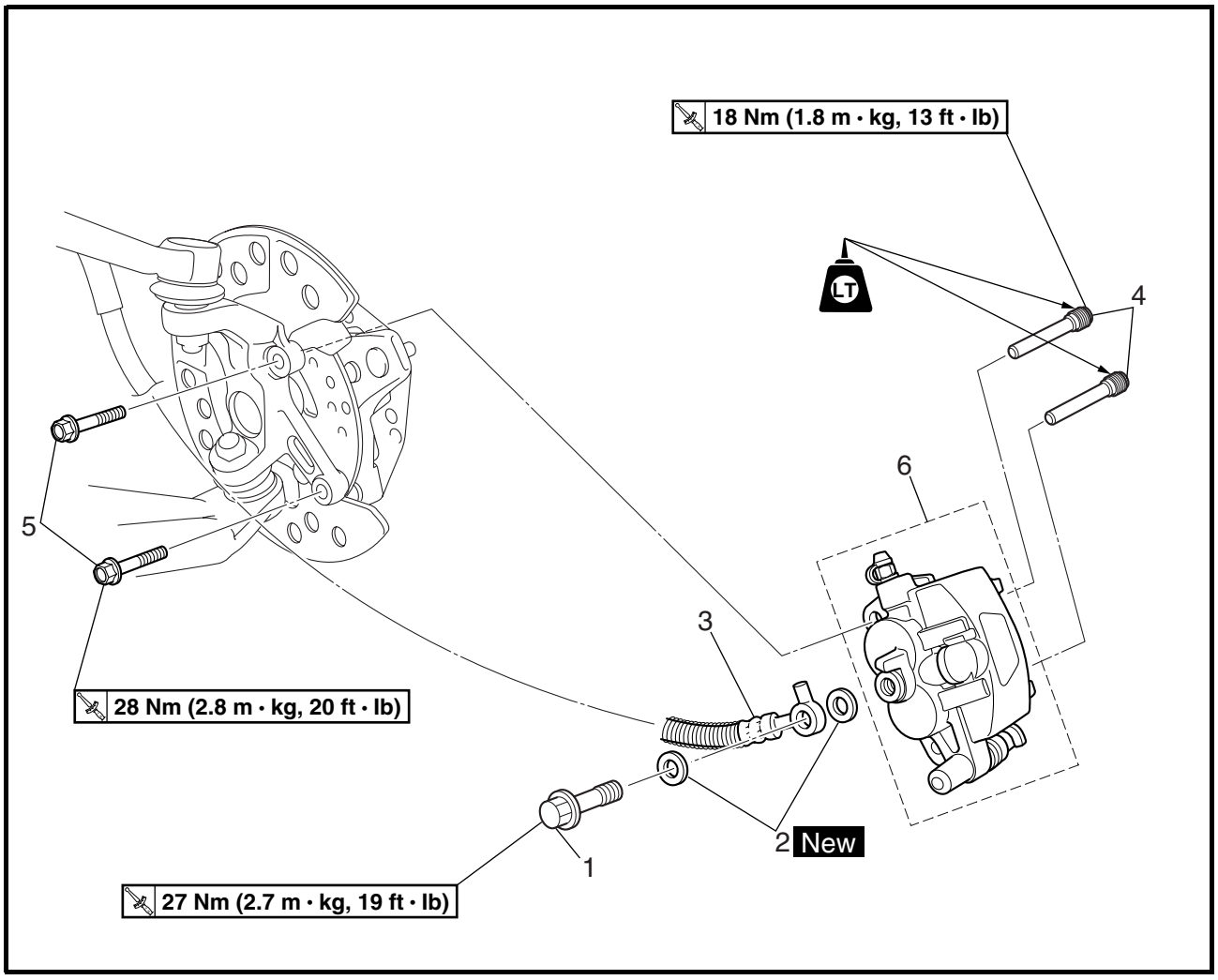

Order	Job/Part	Q'ty	Remarks
	Removing the front brake calipers		Remove the parts in the order listed. The following procedure applies to both of the front brake calipers.
	Brake caliper		Drain.
	Front wheel		Refer to "FRONT AND REAR WHEELS".
1	Union bolt	1	Disconnect. Refer to "INSTALLING THE FRONT BRAKE CALIPERS".
2	Copper washer	2	
3	Brake hose	1	
4	Brake pad retaining bolt	2	Loosen.
5	Brake caliper mounting bolt	2	
6	Brake caliper assembly	1	
			For installation, reverse the removal procedure.

EBS00423

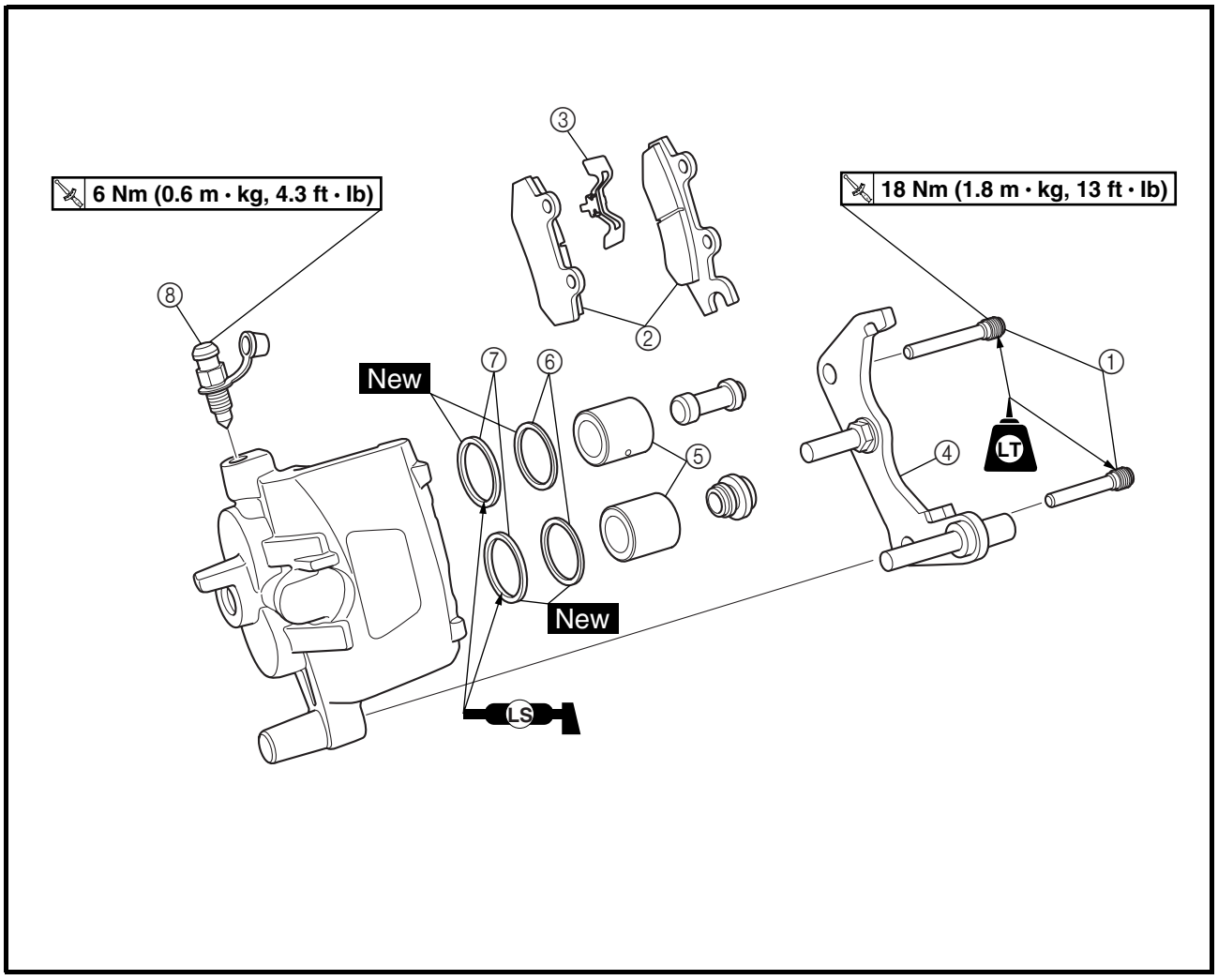

Order	Job/Part	Q'ty	Remarks
	Disassembling the front brake calipers		Remove the parts in the order listed. The following procedure applies to both of the front brake calipers.
①	Brake pad retaining bolt	2	
②	Brake pad	2	
③	Brake pad spring	1	
④	Caliper bracket	1	
⑤	Caliper piston	2	Refer to "DISASSEMBLING THE FRONT AND REAR BRAKE CALIPERS" and "ASSEMBLING THE FRONT BRAKE CALIPERS".
⑥	Dust seal	2	
⑦	Caliper piston seal	2	
⑧	Bleed screw	1	For assembly, reverse the disassembly procedure.

EBS00424
REAR BRAKE CALIPER

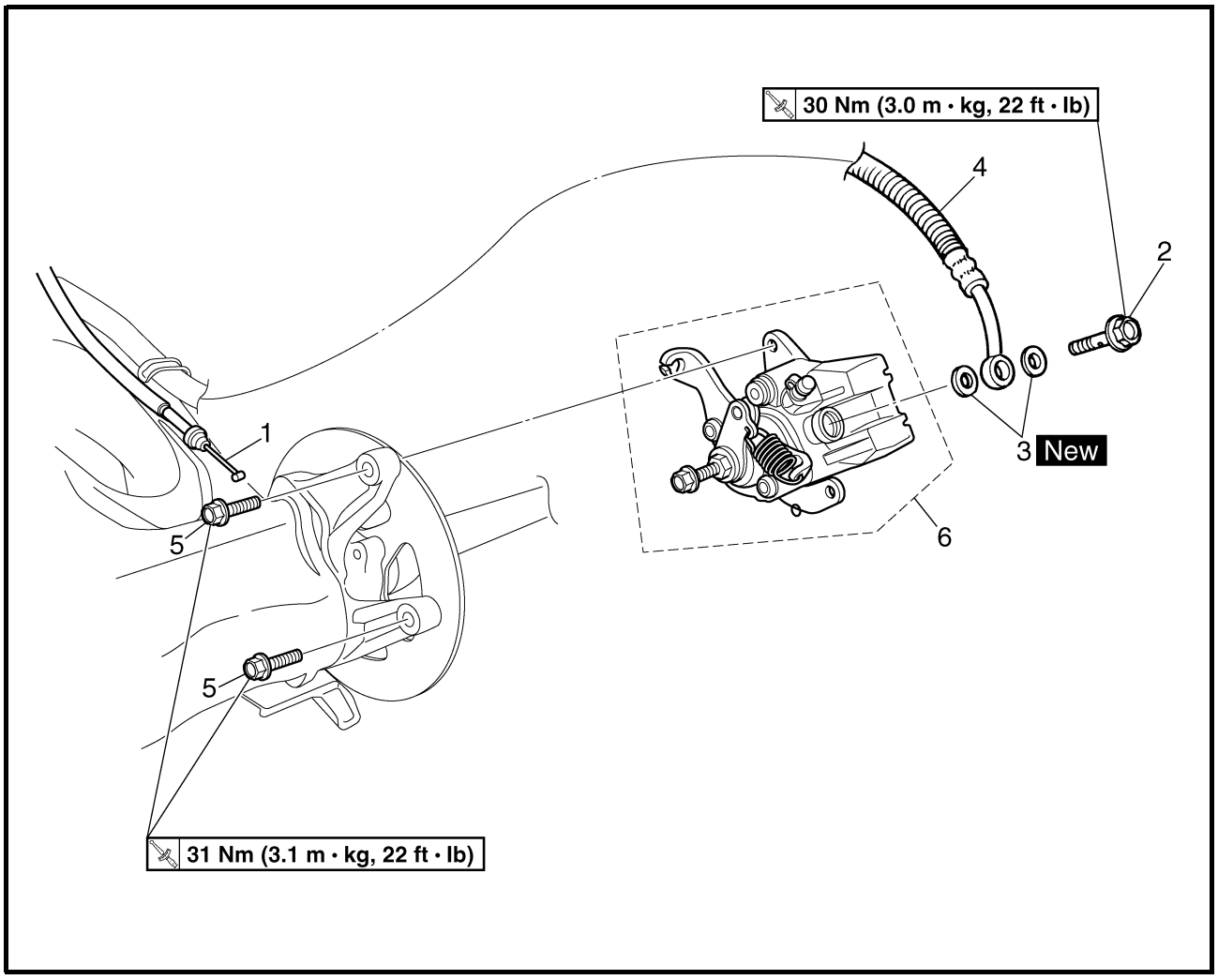

Order	Job/Part	Q'ty	Remarks
	Removing the rear brake caliper		Remove the parts in the order listed.
	Brake fluid		Drain.
1	Parking brake cable	1	Disconnect. Refer to "REMOVING THE PARKING BRAKE CABLE".
2	Union bolt	2	Disconnect. Refer to "INSTALLING THE REAR BRAKE CALIPER".
3	Copper washer	2	
4	Brake hose	1	
5	Brake caliper mounting bolt	2	
6	Brake caliper assembly	1	
			For installation, reverse the removal procedure.

EBS00425

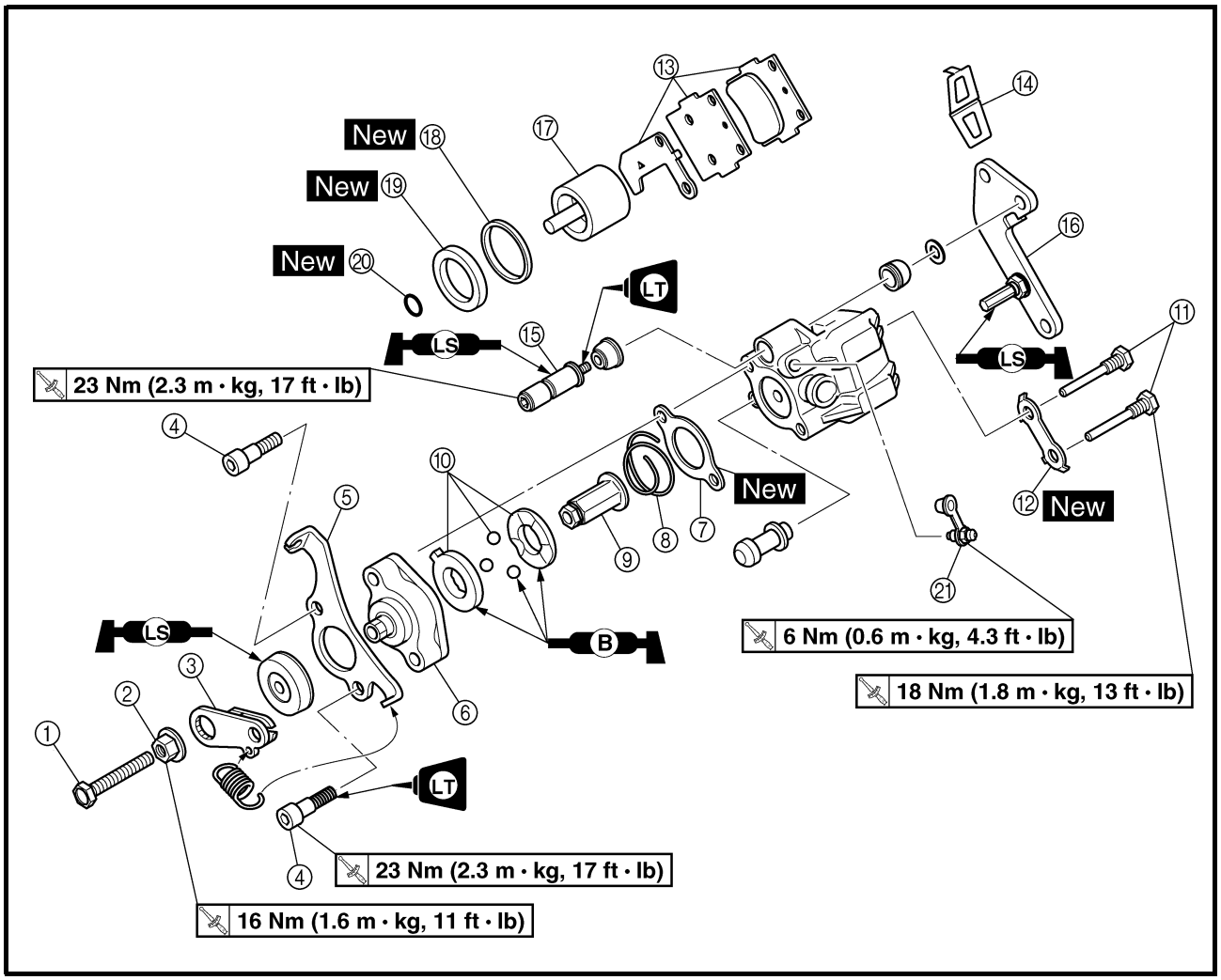

Order	Job/Part	Q'ty	Remarks
	Disassembling the rear brake caliper		Remove the parts in the order listed.
①	Adjusting bolt	1	
②	Locknut	1	
③	Parking brake arm	1	
④	Parking brake case mounting bolt	2	
⑤	Parking brake case bracket	1	
⑥	Parking brake case	1	
⑦	Gasket	1	
⑧	Spring	1	
⑨	Nut	1	
⑩	Bearing	1	

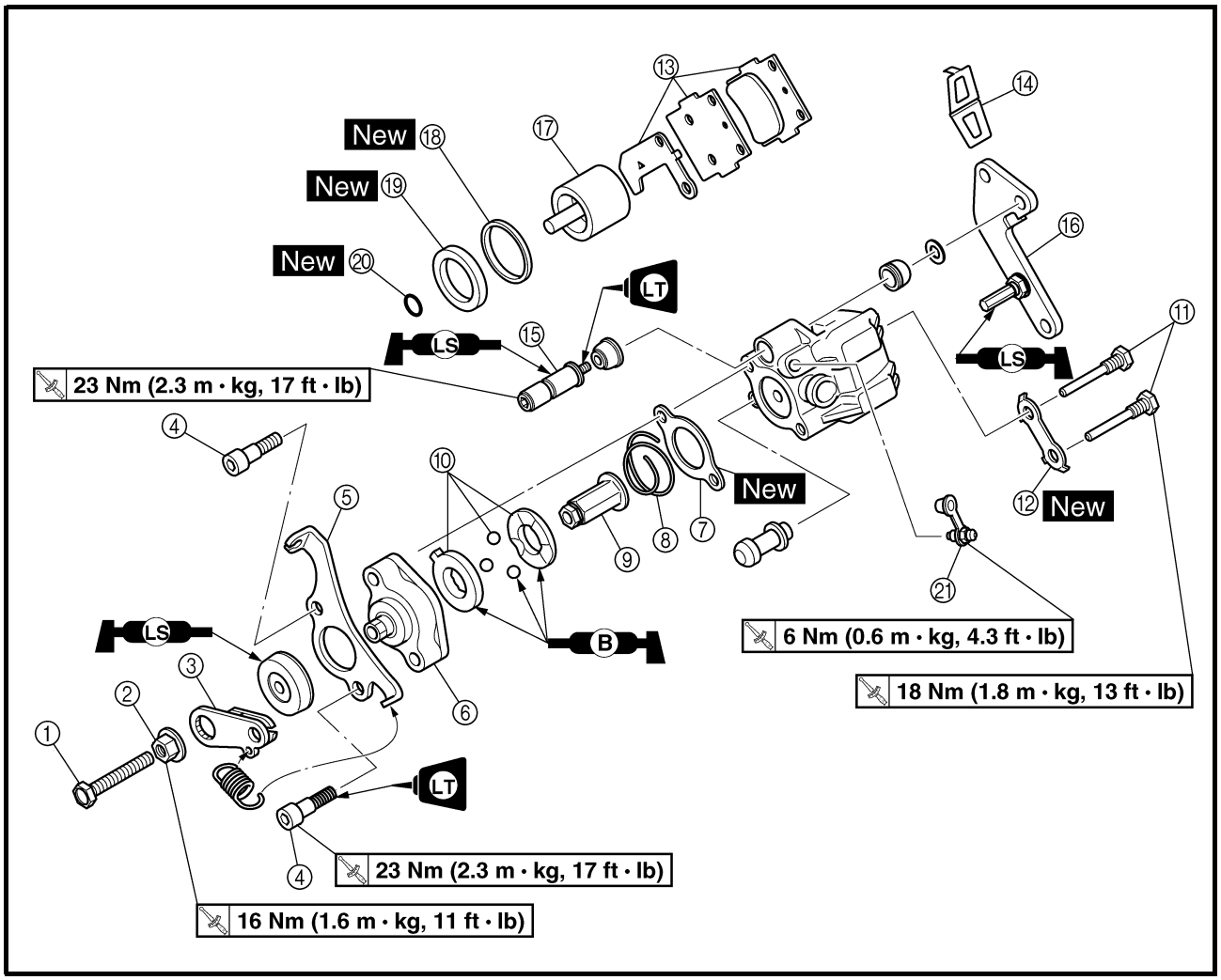

Order	Job/Part	Q'ty	Remarks
⑪	Brake pad holding bolt	2	
⑫	Lock washer	1	
⑬	Brake pad/pad shim	2/1	
⑭	Brake pad spring	1	
⑮	Retaining bolt	1	
⑯	Caliper bracket	1	
⑰	Brake caliper piston	1	Refer to "DISASSEMBLING THE FRONT AND REAR BRAKE CALIPERS" and "ASSEMBLING THE REAR BRAKE CALIPER".
⑱	Dust seal	1	
⑲	Caliper piston seal	1	
⑳	O-ring	1	
㉑	Bleed screw	1	
			For assembly, reverse the disassembly procedure.

REMOVING THE PARKING BRAKE CABLE

1. Loosen:
   - nut
   - adjusting bolt
2. Disconnect:
   - parking brake cable
     (from parking brake lever)
3. Disconnect:
   - parking brake cable
     (from rear brake)

EBS00427

DISASSEMBLING THE FRONT AND REAR BRAKE CALIPERS

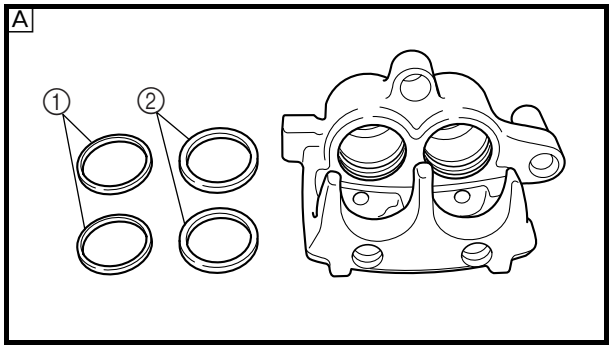

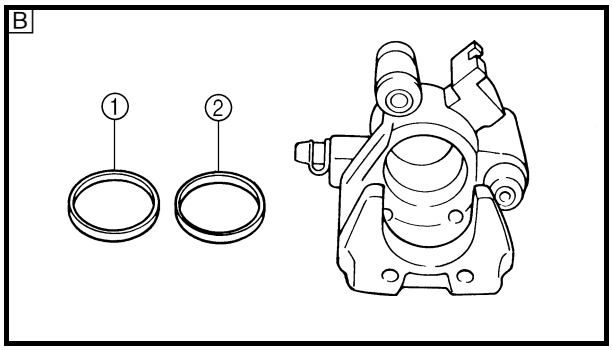

1. Remove:
   - brake caliper pistons
   - dust seals ①
   - caliper piston seals ②

A Front
B Rear

▼▼▼▼▼▼▼▼▼▼▼▼▼▼▼▼▼▼▼▼▼▼▼▼▼▼▼▼▼▼▼▼▼▼

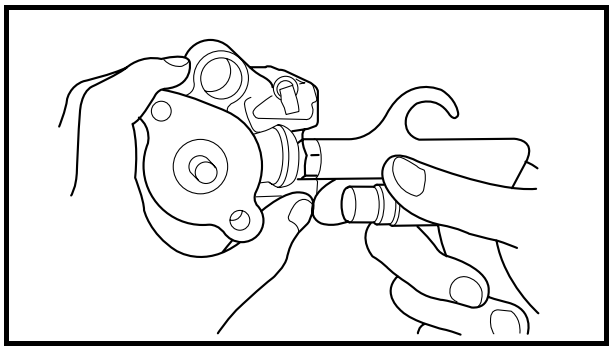

a. Blow compressed air into the hose joint opening to force out the caliper piston from the brake caliper body.

⚠ WARNING

- **Never try to pry out the caliper piston.**
- **Cover the caliper piston with a rag. Be careful not to get injured when the piston is expelled from the caliper cylinder.**

b. Remove the caliper piston seals.

▲▲▲▲▲▲▲▲▲▲▲▲▲▲▲▲▲▲▲▲▲▲▲▲▲▲▲▲▲▲▲▲▲▲

EBS00429

CHECKING THE FRONT AND REAR BRAKE CALIPERS

Recommended brake component replacement schedule	
Brake pads	**As required**
Piston seals, dust seals	**Every two years**
Brake hoses	**Every four years**
Brake fluid	**Replace when brakes are disassembled.**

WARNING

All internal brake components should be cleaned in new brake fluid only. Do not use solvents as they will cause seals to swell and distort.

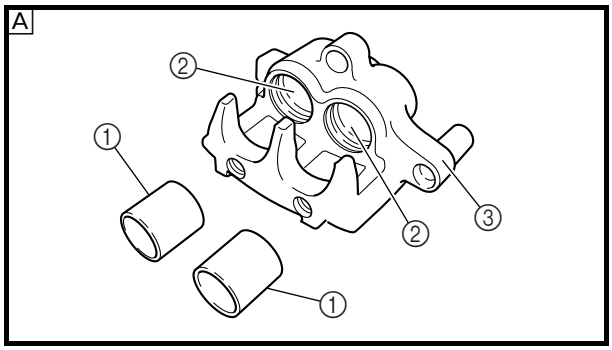

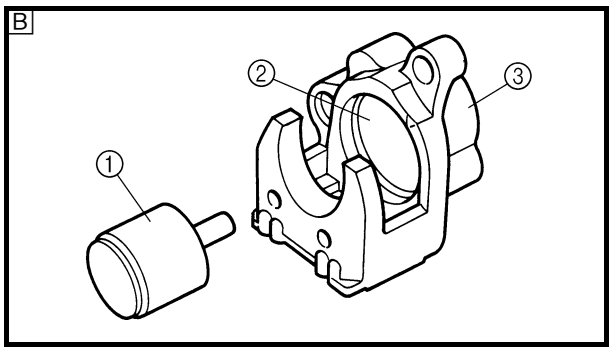

1. Check:
   - brake caliper pistons ①
     Scratches/rust/wear → Replace the brake caliper assembly.
   - brake caliper cylinders ②
     Wear/scratches → Replace the brake caliper assembly.
   - brake caliper body ③
     Cracks/damage → Replace.
   - brake fluid delivery passage
     (brake caliper body)
     Blockage → Blow out with compressed air.

WARNING

Replace the caliper piston seals and dust seals whenever the brake caliper is disassembled.

A Front
B Rear

EBS00431

ASSEMBLING THE FRONT BRAKE CALIPERS

The following procedure applies to both of the front brake calipers.

WARNING

- **All internal brake components should be cleaned and lubricated with new brake fluid only before installation.**

Recommended brake fluid
DOT 4

- **Replace the caliper piston seal whenever a brake caliper is disassembled.**

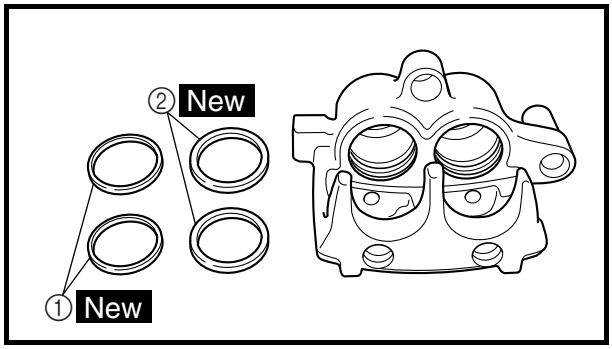

1. Install:
   - caliper piston seals ① New
   - dust seals ② New

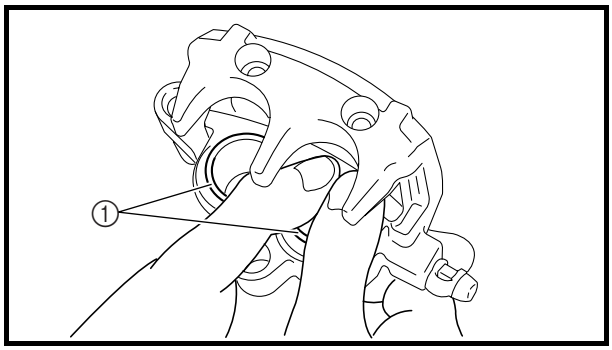

2. Install:
   - brake caliper pistons ①

EBS00432

ASSEMBLING THE REAR BRAKE CALIPER

WARNING

- **All internal brake components should be cleaned and lubricated with new brake fluid only before installation.**

Recommended brake fluid
DOT 4

- **Replace the caliper piston seal whenever a brake caliper is disassembled.**

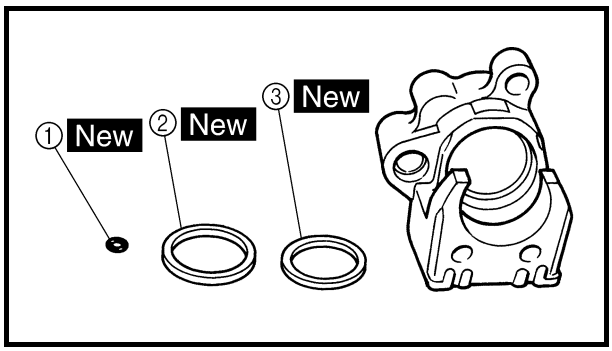

1. Install:
   - O-ring ① New
   - caliper piston seal ② New
   - dust seal ③ New

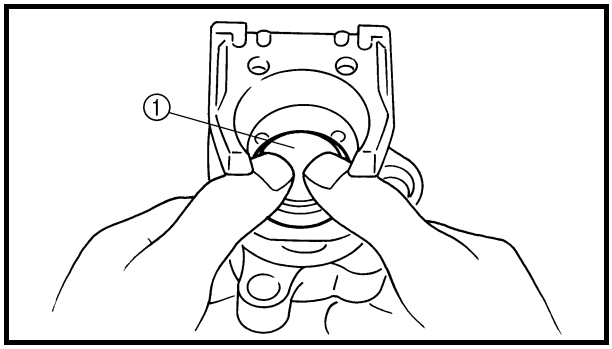

2. Install:
   - brake caliper piston ①

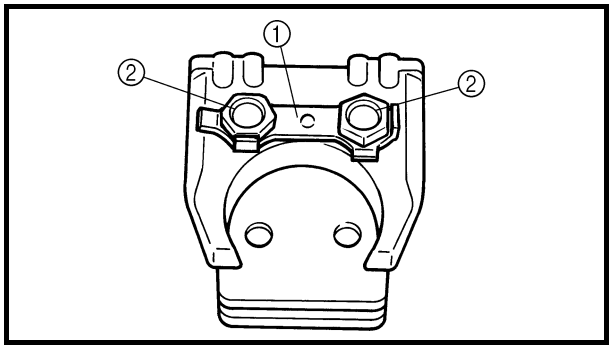

3. Install:
   - lock washer ① New
   - brake pad holding bolts ②

   18 Nm (1.8 m · kg, 13 ft · lb)
4. Bend the lock washer tabs along a flat side of the bolts.

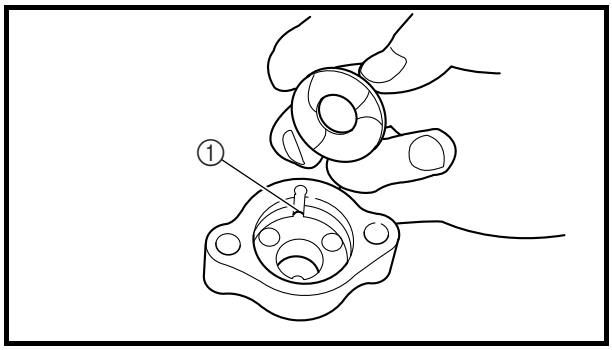

5. Mesh the bearing race tab ① with parking brake case slit.

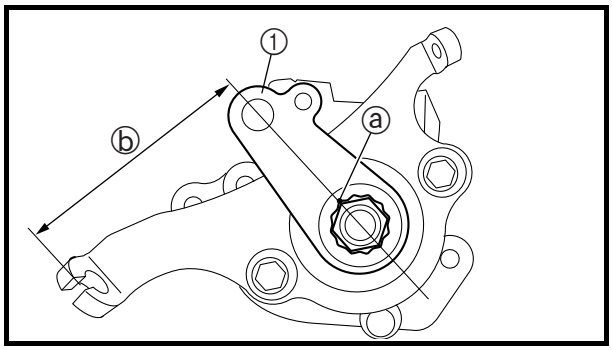

6. Install:
   - parking brake arm ①

NOTE:
Align the center of the parking brake arm with a adjuster nut corner ⓐ and position the parking brake arm as shown.

7. Measure:
   - parking-brake-arm-to-parking-brake-bracket distance ⓑ
     Out of specification → Adjust.

Parking-brake-arm-to-parking-brake-bracket distance
58 mm (2.28 in)

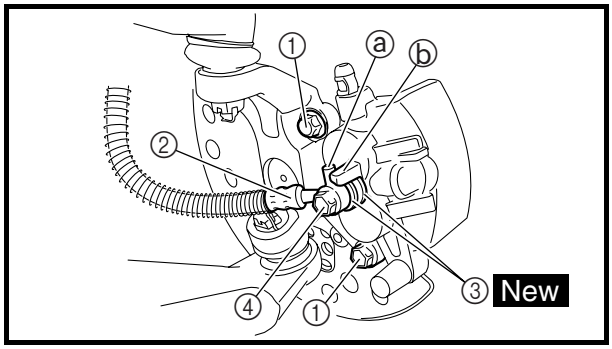

EBS00434

INSTALLING THE FRONT BRAKE CALIPERS

The following procedure applies to both of the front brake calipers.

1. Install:
   - brake caliper assembly
   - brake caliper mounting bolts ①
     28 Nm (2.8 m · kg, 20 ft · lb)
   - brake hose ②
   - copper washers ③ New
   - union bolt ④ **27 Nm (2.7 m · kg, 19 ft · lb)**

CAUTION:

When installing the brake hose on the brake caliper, make sure that the brake pipe ⓐ touches the projection ⓑ on the brake caliper.

WARNING

Proper brake hose routing is essential to insure safe machine operation. Refer to "CABLE ROUTING" in chapter 2.

2. Fill:
   - brake reservoir

Recommended brake fluid
DOT 4

CAUTION:

Brake fluid may damage painted surfaces or plastic parts. Always clean up spilled brake fluid immediately.

WARNING

- **Use only the designated quality brake fluid: other brake fluids may deteriorate the rubber seals, causing leakage and poor brake performance.**
- **Refill with the same type of brake fluid: mixing brake fluids may result in a harmful chemical reaction and lead to poor brake performance.**
- **Be careful that water does not enter the master cylinder when refilling. Water will significantly lower the boiling point of the brake fluid and may result in vapor lock.**

3. Air bleed:
   - brake system
     Refer to “BLEEDING THE HYDRAULIC BRAKE SYSTEM” in chapter 3.
4. Check:
   - brake fluid level
     Brake fluid level is below the “LOWER” level line → Add the recommended brake fluid to the proper level.
     Refer to “CHECKING THE BRAKE FLUID LEVEL” in chapter 3.

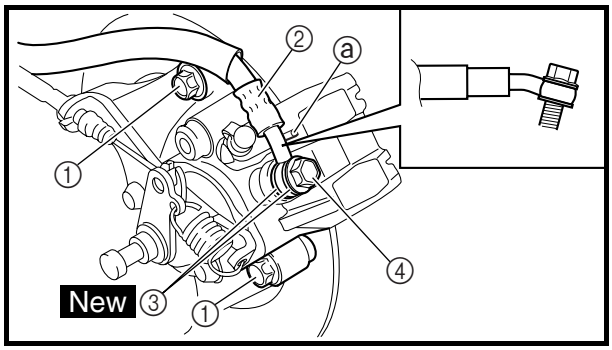

EBS00436

INSTALLING THE REAR BRAKE CALIPER

1. Install:
   - brake caliper assembly
   - brake caliper mounting bolts ①
     31 Nm (3.1 m · kg, 22 ft · lb)
   - brake hose ②
   - copper washers ③ New
   - union bolt ④ **30 Nm (3.0 m · kg, 22 ft · lb)**

CAUTION:

When installing the brake hose on the brake caliper, make sure that the brake pipe touches the projection ⓐ on the brake caliper.

WARNING

Proper brake hose routing is essential to insure safe machine operation. Refer to “CABLE ROUTING” in chapter 2.

2. Fill:
   - brake reservoir

Recommended brake fluid
DOT 4

CAUTION:

Brake fluid may damage painted surfaces or plastic parts. Always clean up spilled brake fluid immediately.

WARNING

- **Use only the designated quality brake fluid: other brake fluids may deteriorate the rubber seals, causing leakage and poor brake performance.**
- **Refill with the same type of brake fluid: mixing brake fluids may result in a harmful chemical reaction and lead to poor brake performance.**
- **Be careful that water does not enter the master cylinder when refilling. Water will significantly lower the boiling point of the brake fluid and may result in vapor lock.**

3. Air bleed:
   - brake system
     Refer to “BLEEDING THE HYDRAULIC BRAKE SYSTEM” in chapter 3.
4. Check:
   - brake fluid level
     Brake fluid level is below the “LOWER” level line → Add the recommended brake fluid to the proper level.
     Refer to “CHECKING THE BRAKE FLUID LEVEL” in chapter 3.
5. Adjust:
   - parking brake cable end length
     Refer to “ADJUSTING THE PARKING BRAKE” in chapter 3.

EBS00444

STEERING SYSTEM

HANDLEBAR

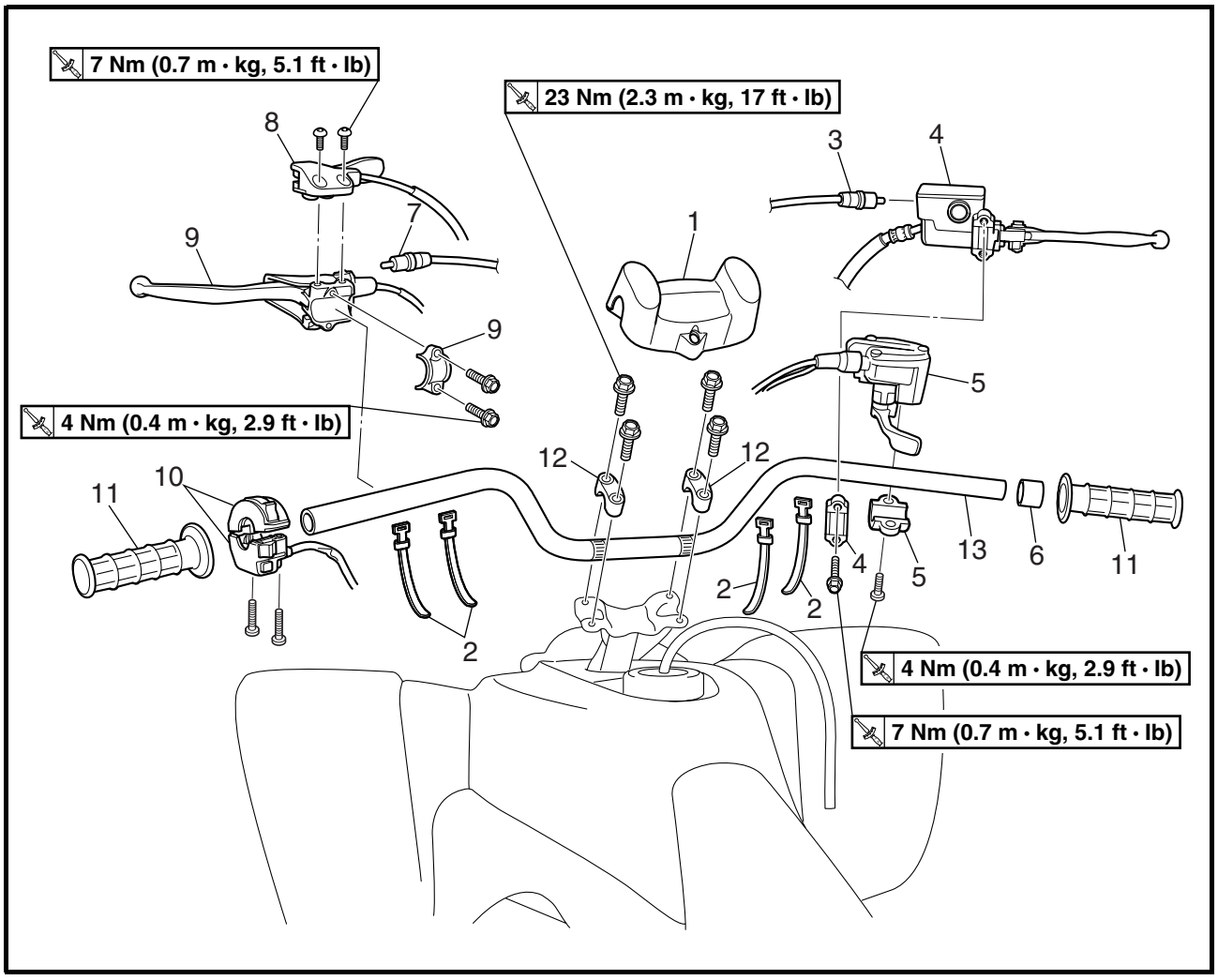

Order	Job/Part	Q'ty	Remarks
	Removing the handlebar		Remove the parts in the order listed.
1	Handlebar cover	1	
2	Plastic band	4	
3	Front brake light switch	1	Refer to "REMOVING THE FRONT BRAKE LIGHT SWITCH AND CLUTCH SWITCH".
4	Brake master cylinder/bracket	1/1	Refer to "INSTALLING THE BRAKE MASTER CYLINDER".
5	Throttle lever assembly/bracket	1/1	
6	Spacer	1	
7	Clutch switch	1	Refer to "REMOVING THE FRONT BRAKE LIGHT SWITCH AND CLUTCH SWITCH".
8	Parking brake lever	1	
9	Clutch lever/bracket	1/1	Refer to "INSTALLING THE CLUTCH LEVER".
10	Handlebar switch	1	

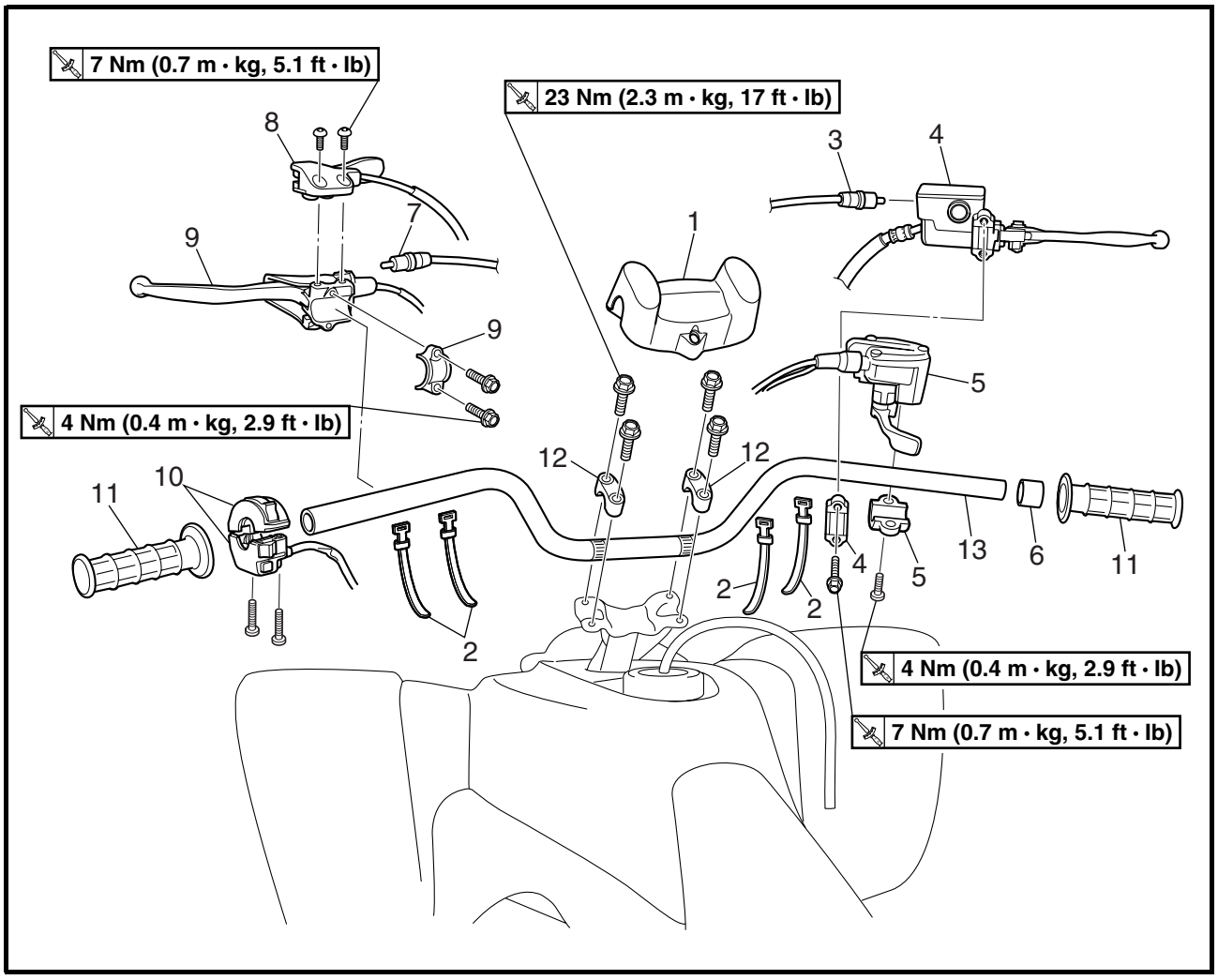

Order	Job/Part	Q'ty	Remarks
11	Handlebar grip	2	Refer to "REMOVING THE HANDLEBAR GRIPS" and "INSTALLING THE HANDLEBAR GRIPS".
12	Handlebar holder	2	Refer to "INSTALLING THE HANDLEBAR".
13	Handlebar	1	
			For installation, reverse the removal procedure.

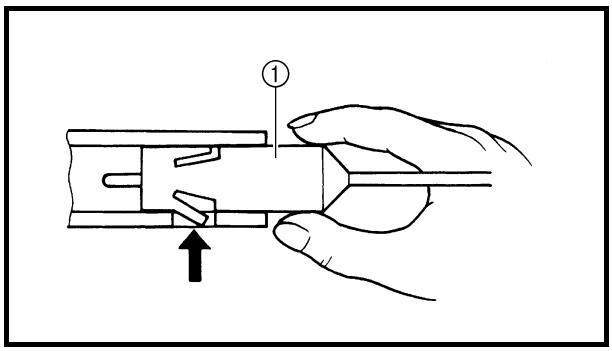

EBS00446

REMOVING THE FRONT BRAKE LIGHT SWITCH AND CLUTCH SWITCH

1. Remove:
   - front brake light switch ①
   - clutch switch

NOTE:

- Push the fastener when removing the front brake light switch out of the brake master cylinder.
- Push the fastener when removing the clutch switch out of the clutch lever holder.

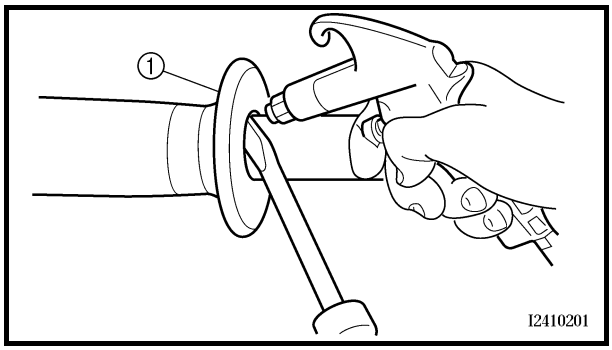

EBS00447

REMOVING THE HANDLEBAR GRIPS

1. Remove:
   - handlebar grips ①

NOTE:

Blow compressed air between the handlebar and handlebar grip, and gradually push the grip off the handlebar.

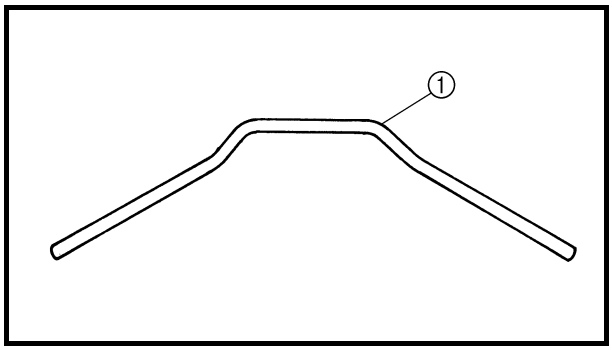

EBS00448

CHECKING THE HANDLEBAR

1. Check:
   - handlebar ①
     Bends/cracks/damage → Replace.

⚠ WARNING

Do not attempt to straighten a bent handlebar as this may dangerously weaken the handlebar.

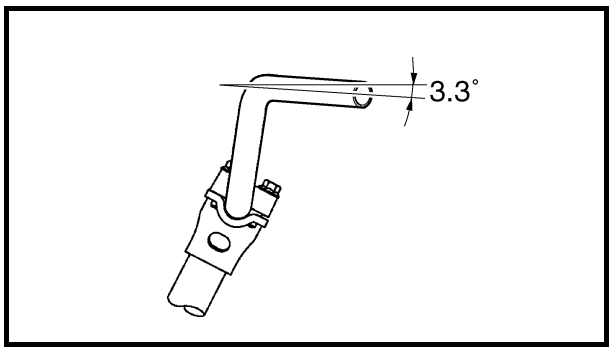

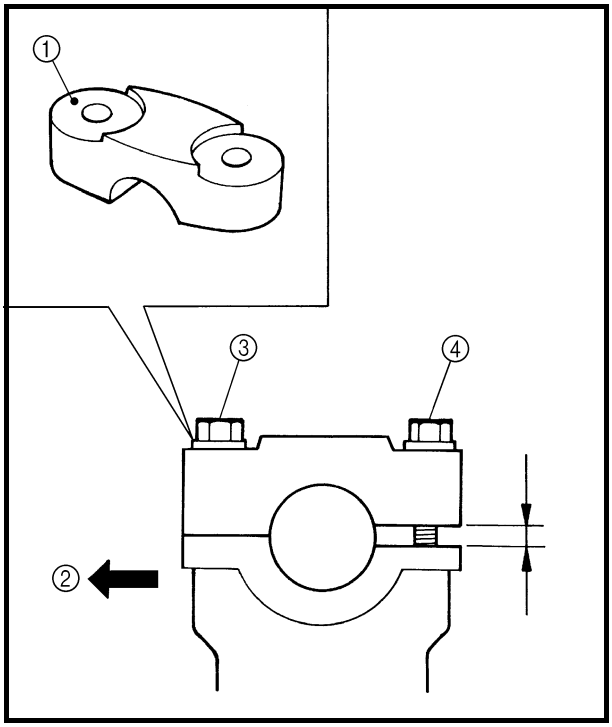

EBS00449

INSTALLING THE HANDLEBAR

1. Install:
   - handlebar
   - handlebar holders

	23 Nm (2.3 m · kg, 17 ft · lb)

NOTE:

- Install the handlebar within 3.3° from the horizontal line shown in the illustration.
- The upper handlebar holder should be installed with the punched mark ① forward ②.

CAUTION:

First tighten the bolt ③ on the front side of the handlebar holder, and then tighten the bolt ④ on the rear side.

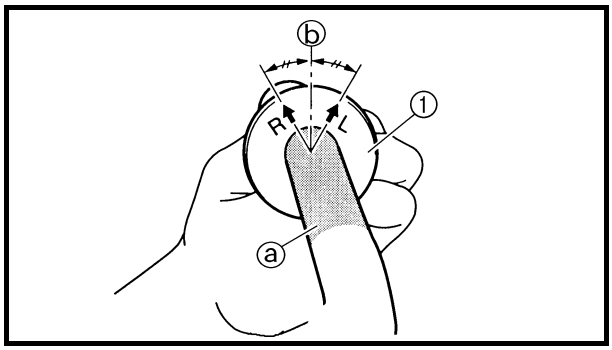

EBS00450

INSTALLING THE HANDLEBAR GRIPS

1. Install:
   - handlebar grips ①

NOTE:

- Before applying the adhesive, wipe off grease or oil on the handlebar surface ⓐ with a lacquer thinner.
- Install the handlebar grips to the handlebar so that the line ⓑ between the two arrow marks faces straight upward.

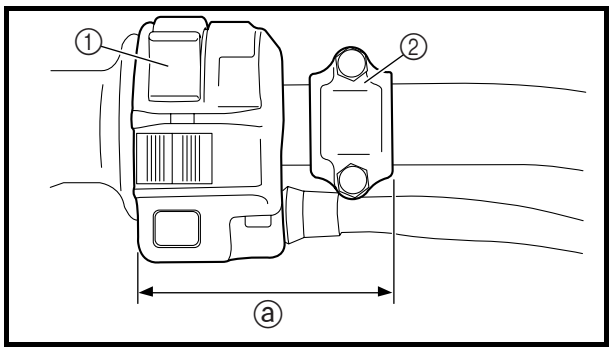

EBS00452

INSTALLING THE CLUTCH LEVER

1. Install:
   - handlebar switch ①
   - clutch lever
   - clutch lever bracket ②

NOTE:

Install the clutch lever bracket as shown.

ⓐ 68 ~ 69 mm (2.68 ~ 2.72 in)

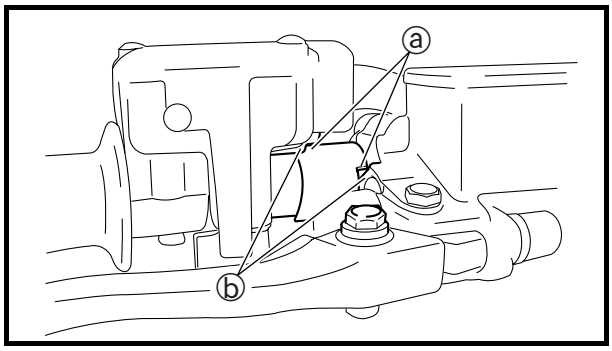

EBS00453

INSTALLING THE BRAKE MASTER CYLINDER

1. Install:
   - throttle lever assembly
   - spacer
   - brake master cylinder

7 Nm (0.7 m · kg, 5.1 ft · lb)

NOTE:

- Engage the indentations ⓐ in the spacer with the lobes ⓑ on the throttle lever assembly and brake master cylinder.
- The “UP” mark on the brake master cylinder bracket should face up.

EBS00454
STEERING STEM

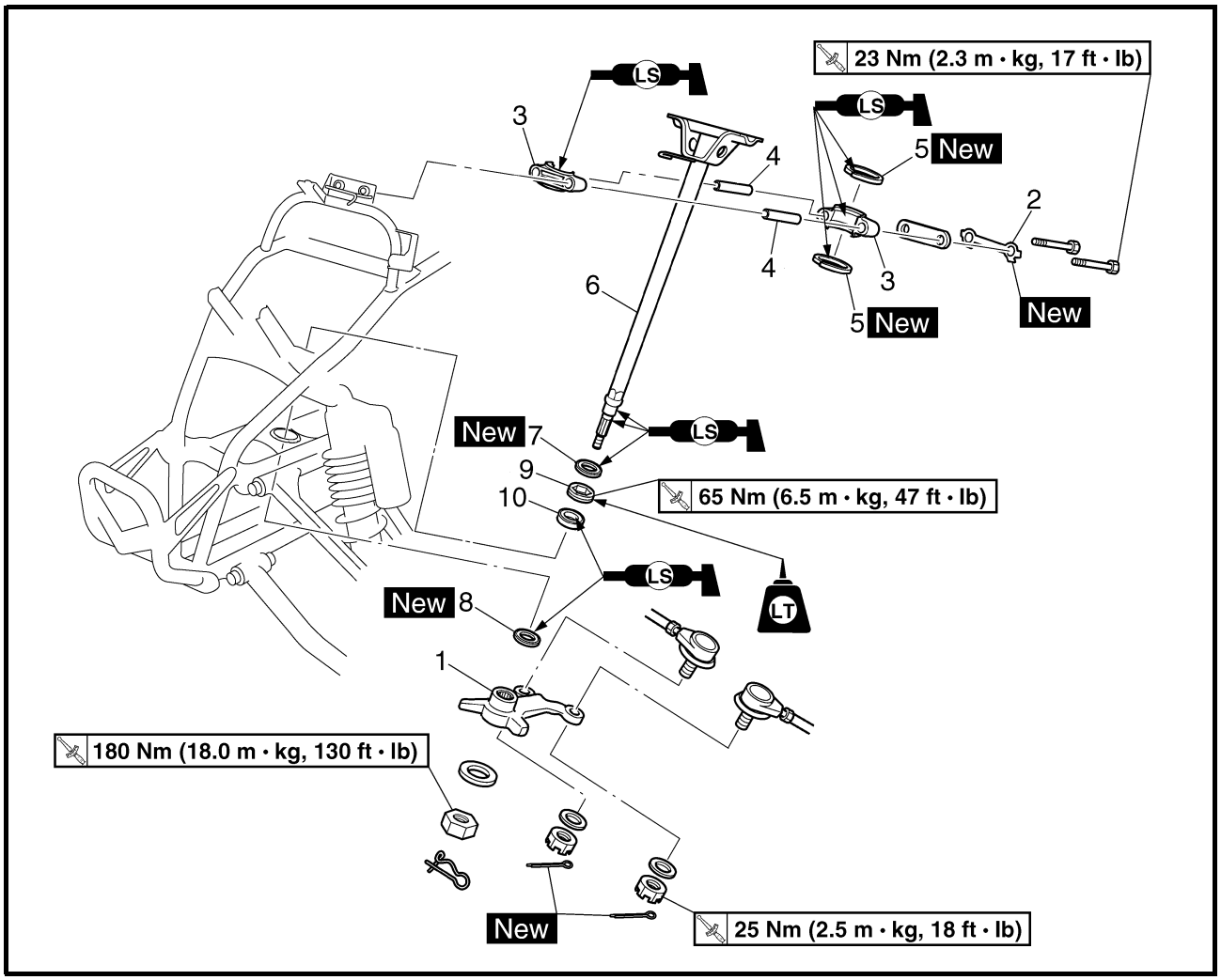

Order	Job/Part	Q'ty	Remarks
	Removing the steering stem		Remove the parts in the order listed.
	Fuel tank cover/side covers (left and right)/fuel tank/front fender		Refer to "SEAT, FENDERS AND FUEL TANK" in chapter 3.
1	Pitman arm	1	Refer to "INSTALLING THE PITMAN ARM".
2	Lock washer	1	Refer to "INSTALLING THE LOCK WASHER".
3	Steering stem bushing	2	
4	Spacer	2	
5	Oil seal	2	
6	Steering stem	1	
7	Oil seal	1	
8	Oil seal	1	

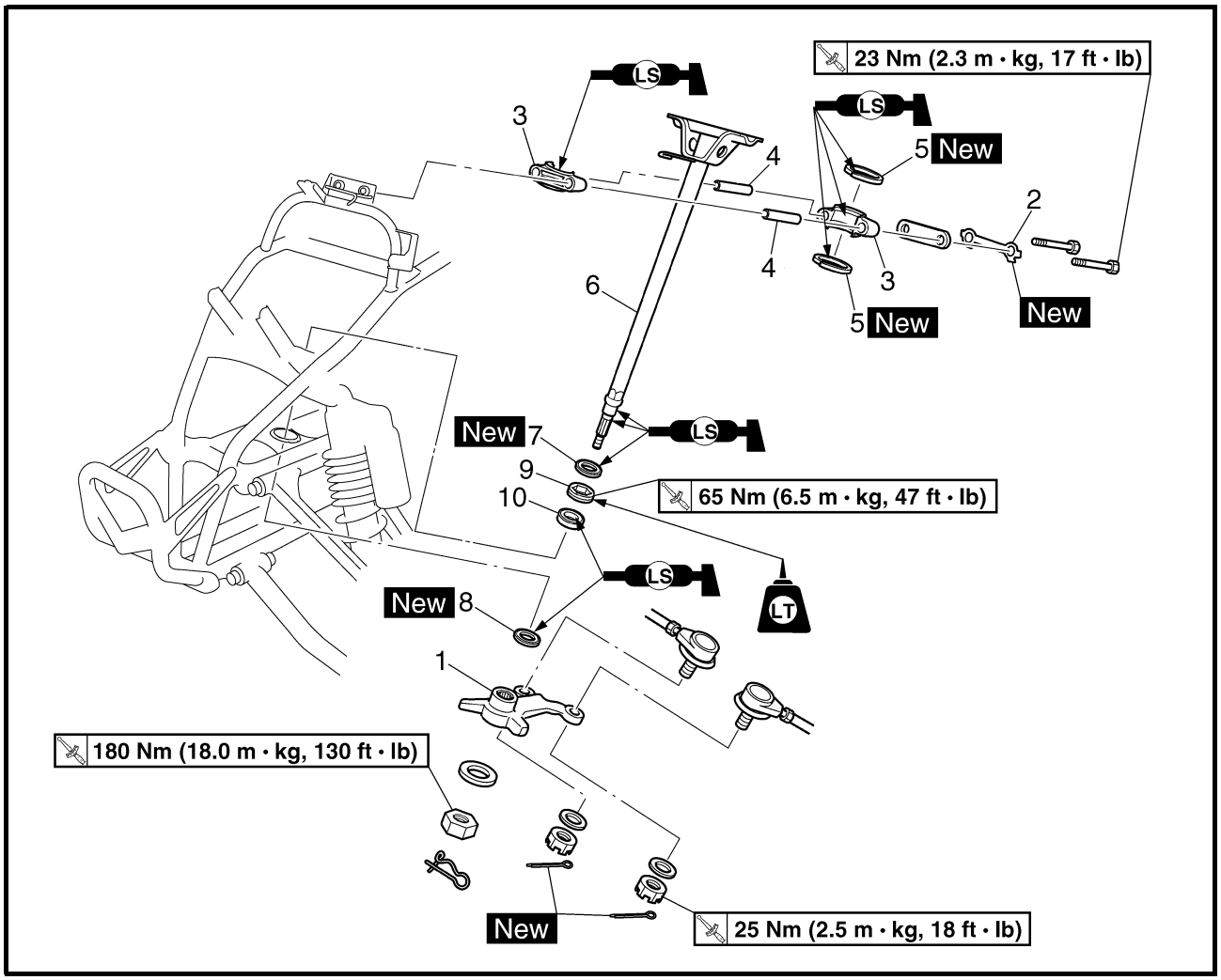

Order	Job/Part	Q'ty	Remarks
9	Bearing retainer	1	Refer to "REMOVING THE BEARING RETAINER" and "INSTALLING THE BEARING RETAINER".
10	Bearing	1	For installation, reverse the removal procedure.

EBS00455

REMOVING THE BEARING RETAINER

1. Remove:
   - bearing retainer

	**Damper rod holder (30 mm)** **P/N. YM-01327, 90890-01327**

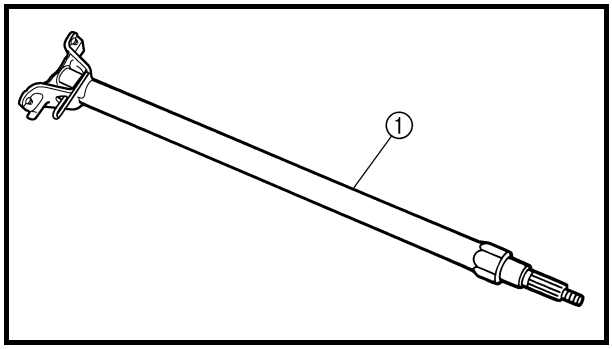

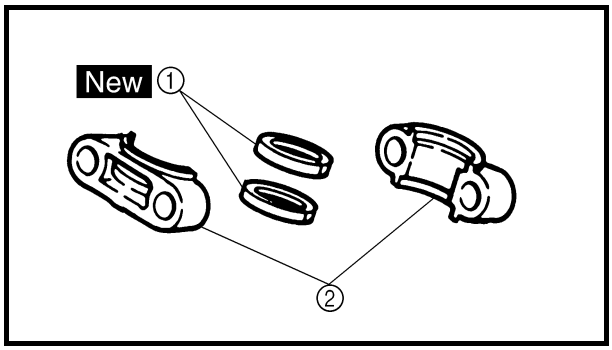

EBS00456

CHECKING THE STEERING STEM

1. Check:
   - steering stem
     Bends → Replace.

⚠ WARNING

Do not attempt to straighten a bent stem; this may dangerously weaken the stem.

2. Check:
   - oil seals ① New
   - steering stem bushings ②
     Wear/damage → Replace.

EBS00457

INSTALLING THE BEARING RETAINER

1. Install:
   - bearing retainer

65 Nm (6.5 m · kg, 47 ft · lb)

	**Damper rod holder (30 mm)** **P/N. YM-01327, 90890-01327**

INSTALLING THE STEERING STEM

1. Install:
   - steering stem

NOTE:

Pass the throttle cable through the cable guide. Refer to “CABLE ROUTING” in chapter 2.

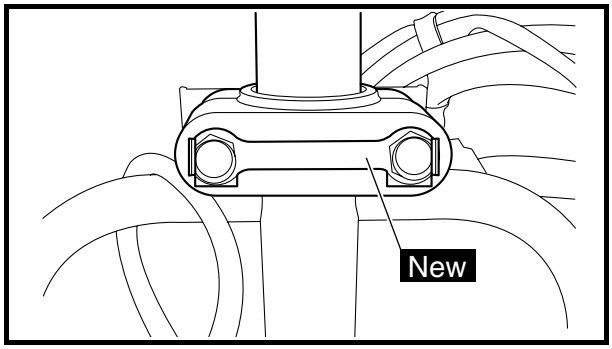

EBS00459

INSTALLING THE LOCK WASHER

1. Install:
   - lock washer New
   - bolts 23 Nm (2.3 m · kg, 17 ft · lb)
2. Bend the lock washer tab along a flat side of the bolt.

INSTALLING THE PITMAN ARM

1. Install:
   - washer
   - nut
   - pitman arm

NOTE:

Make sure that the threads of the steering stem, washers, nuts, and the installation surfaces of the pitman arm are free of grease and oil.

EBS00460

TIE-RODS AND STEERING KNUCKLES

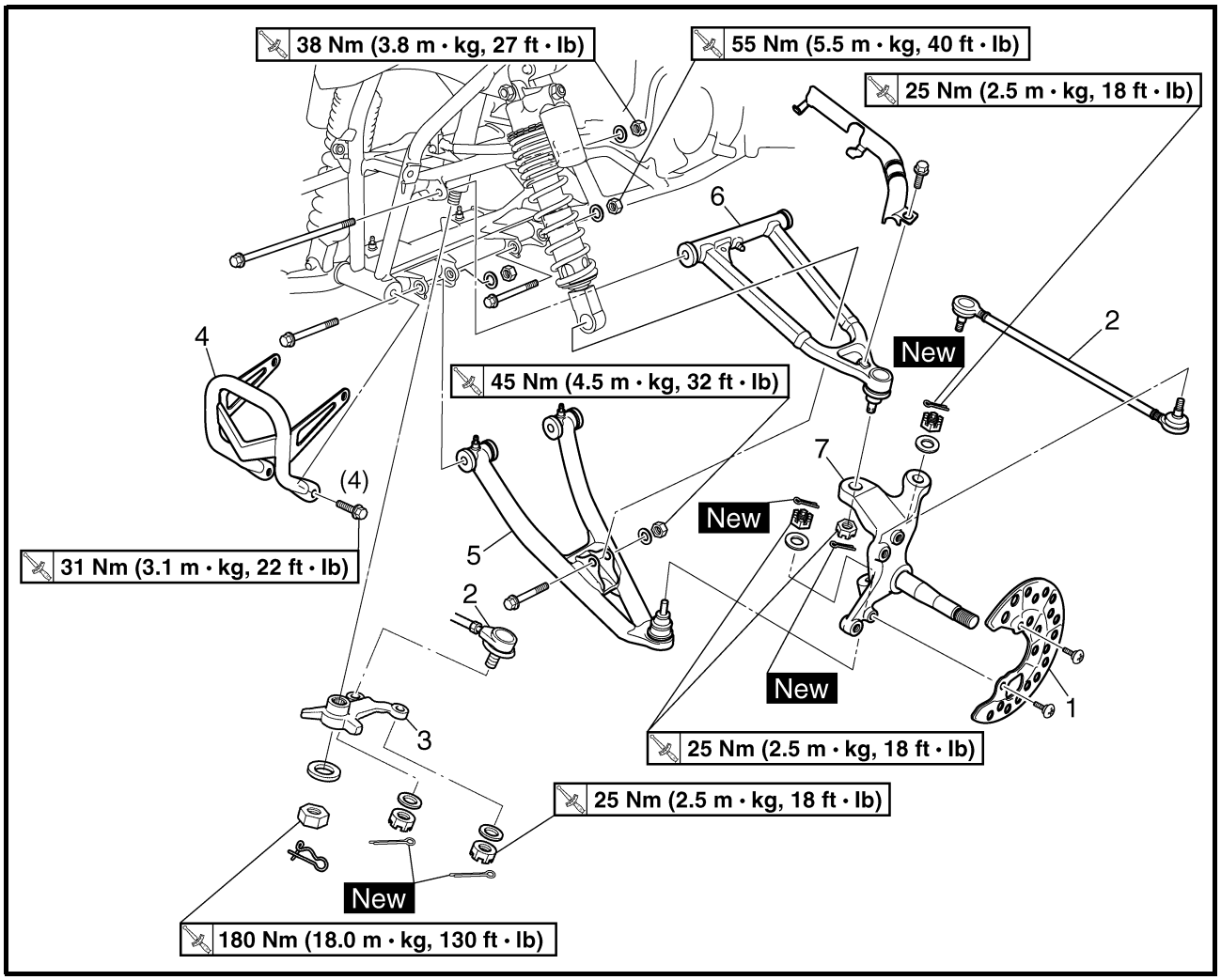

Order	Job/Part	Q'ty	Remarks
	Removing the tie-rods and steering knuckles		Remove the parts in the order listed. The following procedure applies to both of the tie-rods and steering knuckles.
	Front wheel/brake disc		Refer to "FRONT AND REAR WHEELS".
	Front brake caliper		Refer to "FRONT AND REAR BRAKES".
1	Brake disc guard (inner)	1	
2	Tie-rod	2	Refer to "INSTALLING THE TIE-RODS".
3	Pitman arm	1	
4	Front bumper	1	
5	Lower front arm	1	
6	Upper front arm	1	
7	Steering knuckle	1	Refer to "REMOVING THE STEERING KNUCKLES". For installation, reverse the removal procedure.

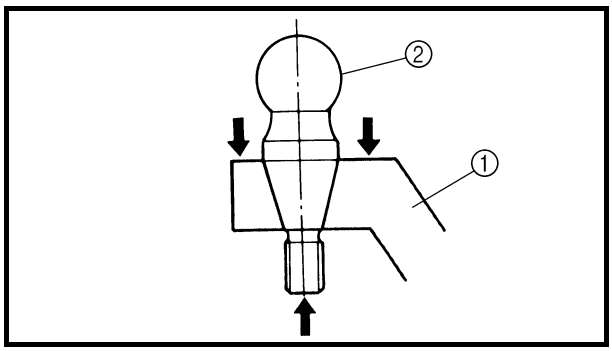

EBS00461
REMOVING THE STEERING KNUCKLES

1. Remove:
   - steering knuckles ①

NOTE:
Use a general puller to separate the ball joint ② and steering knuckle.

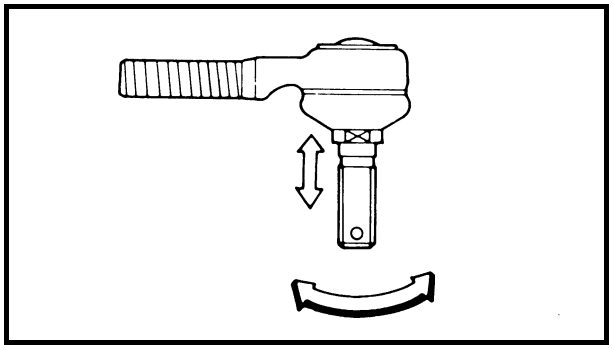

EBS00462
CHECKING THE TIE-RODS

1. Check:
   - tie-rod free play and movement
     Free play → Replace the tie-rod end.
     Turns roughly → Replace the tie-rod end.
2. Check:
   - tie-rods
     Bends/damage → Replace.

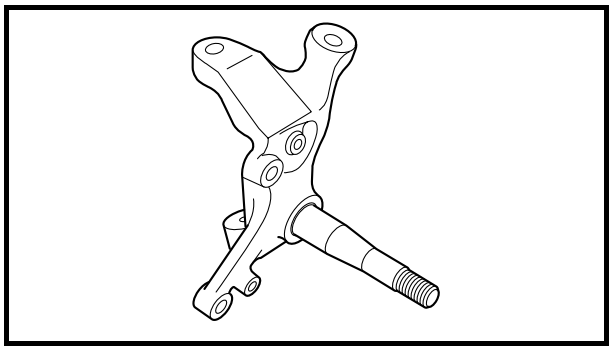

EBS00464
CHECKING THE STEERING KNUCKLES

1. Check:
   - steering knuckles
     Damage/pitting → Replace.

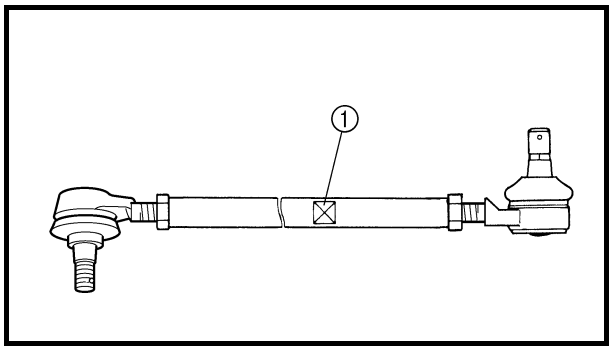

EBS00465
INSTALLING THE TIE-RODS

1. Install:
   - tie-rods (left and right)

	25 Nm (2.5 m · kg, 18 ft · lb)

NOTE:
The tie-rod side which must be installed on the outside has grooves ①.

2. Adjust:
   - toe-in
     Refer to “ADJUSTING THE TOE-IN” in chapter 3.

EBS00468

FRONT ARMS AND FRONT SHOCK ABSORBER ASSEMBLIES

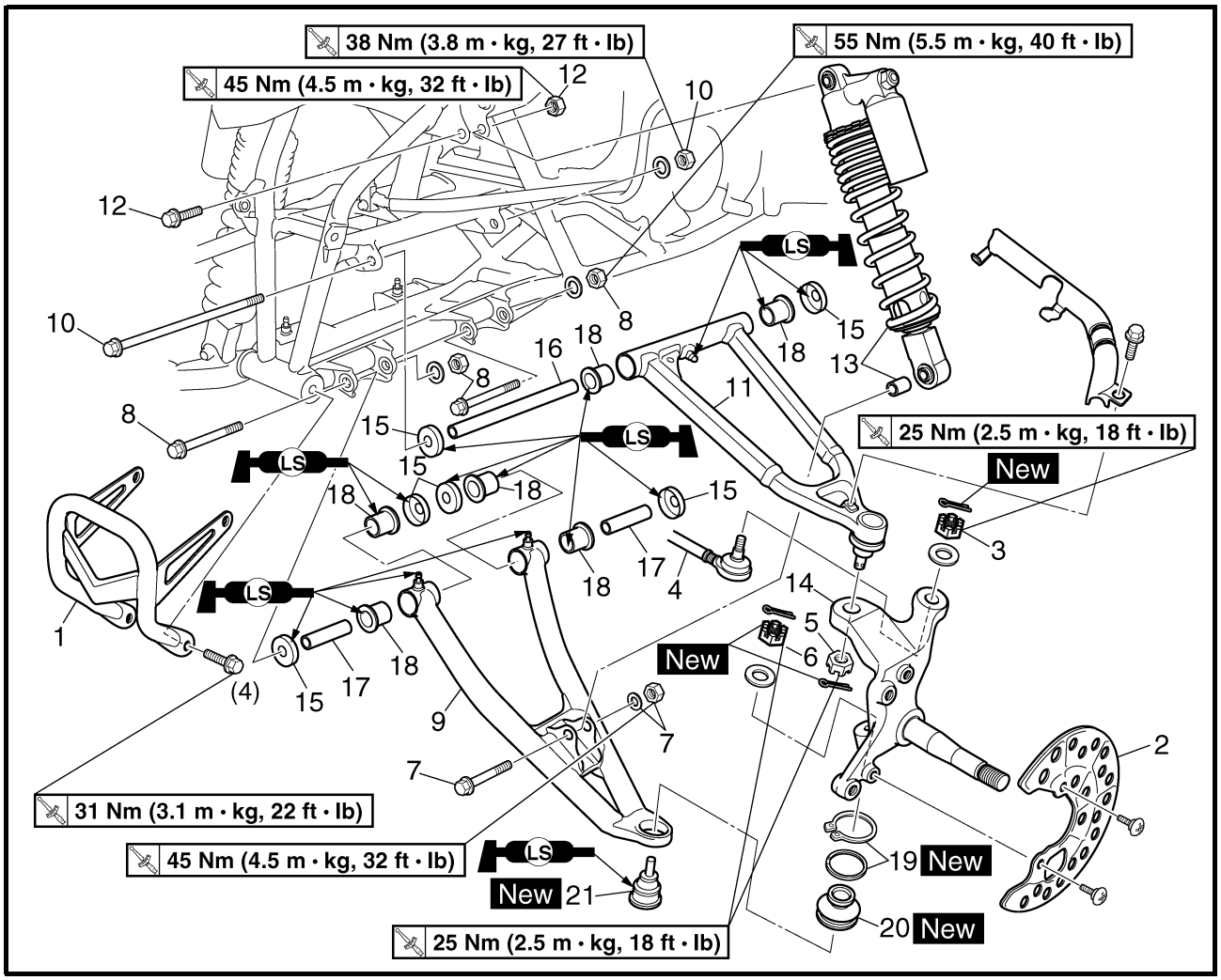

Order	Job/Part	Q'ty	Remarks
	Removing the front arms and front shock absorber assemblies		Remove the parts in the order listed. The following procedure applies to both of the front arms and front shock absorber assemblies.
	Front wheel/brake disc		Refer to "FRONT AND REAR WHEELS".
	Front brake caliper		Refer to "FRONT AND REAR BRAKES".
1	Front bumper	1	
2	Brake disc guard (inner)	1	
3	Nut	1	
4	Tie-rod	1	Disconnect.
5	Nut	1	
6	Nut	1	
7	Nut/washer/bolt	1/1/1	

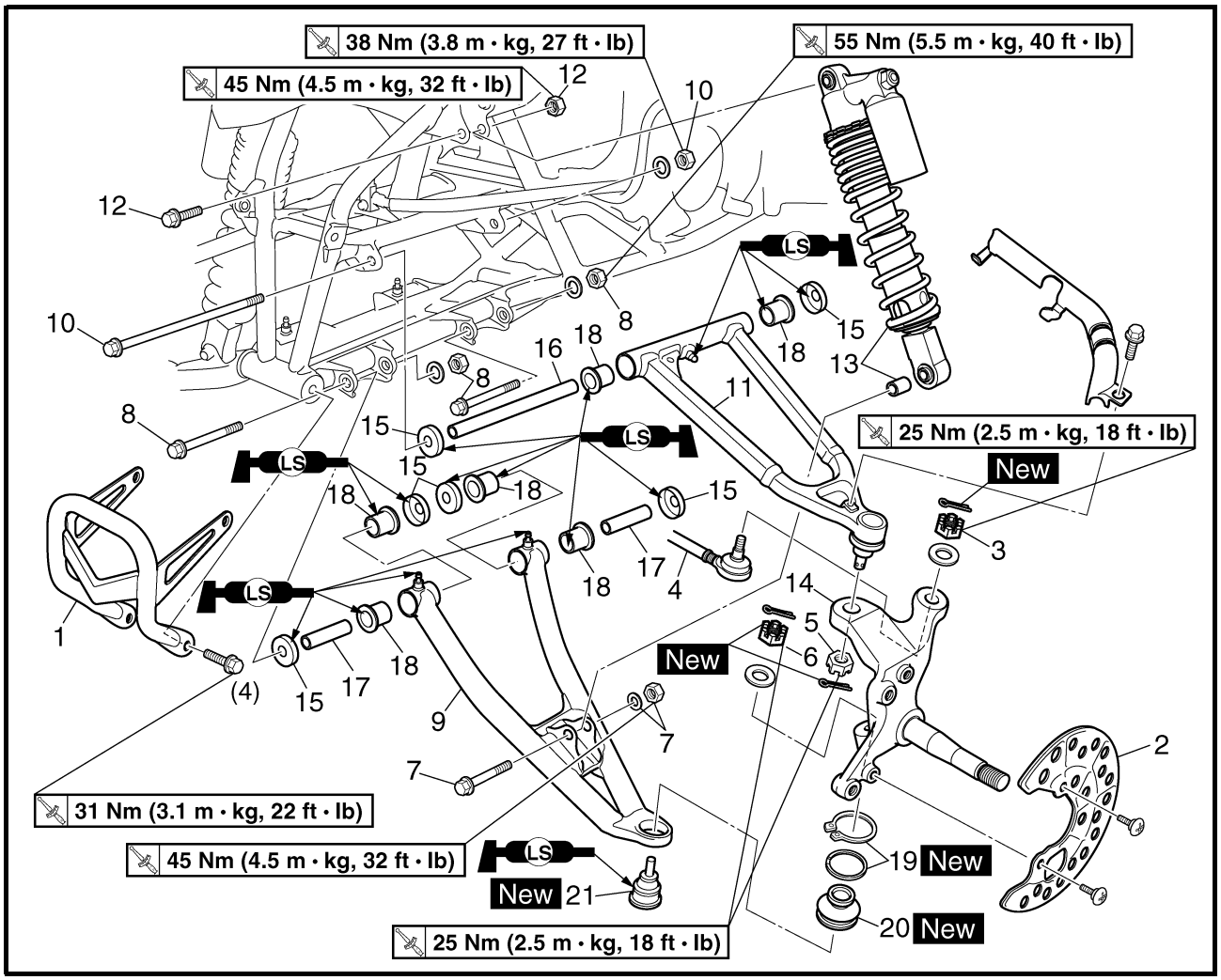

Order	Job/Part	Q'ty	Remarks
8	Nut/bolt	2/2	Refer to "REMOVING THE FRONT ARMS" and "INSTALLING THE FRONT ARMS".
9	Lower front arm	1	
10	Nut/bolt	1/1	
11	Upper front arm	1	
12	Nut/bolt	1/1	
13	Front shock absorber/bushing	1/1	
14	Steering knuckle	1	
15	Dust cover	6	
16	Spacer	1	
17	Spacer	2	
18	Bushing	6	
19	Circlip	1	
20	Rubber boot/boot retaining ring	1/1	
21	Ball joint	1	
			For installation, reverse the removal procedure.

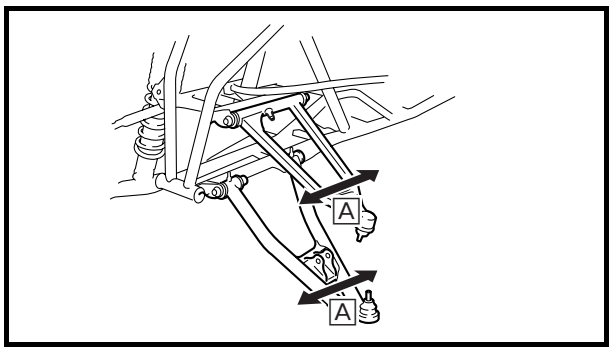

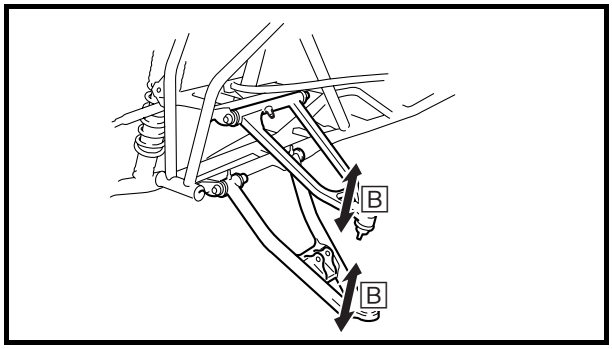

EBS00469

REMOVING THE FRONT ARMS

1. Check:
   - front arm free play

▼▼▼▼▼▼▼▼▼▼▼▼▼▼▼▼▼▼▼▼▼▼▼▼▼▼▼▼▼▼▼▼▼▼

a. Check the front arm side play [A] by moving it from side to side.
   If side play is noticeable, check the bushings.
b. Check the front arm vertical movement [B] by moving it up and down.
   If the vertical movement is tight or rough, or if there is binding, check the bushings.

▲▲▲▲▲▲▲▲▲▲▲▲▲▲▲▲▲▲▲▲▲▲▲▲▲▲▲▲▲▲▲▲▲▲

2. Remove:
   - front arm

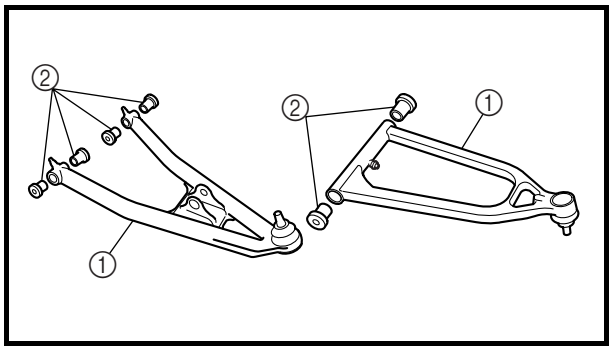

EBS00470

CHECKING THE FRONT ARMS

1. Check:
   - front arms ①
     Bends/damage → Replace.
2. Check:
   - bushings ②
     Wear/damage → Replace.

HANDLING THE FRONT SHOCK ABSORBER AND GAS CYLINDER

⚠ WARNING

This front shock absorber and gas cylinder contain highly compressed nitrogen gas. Before handling the front shock absorber or gas cylinder, read and make sure you understand the following information. The manufacturer cannot be held responsible for property damage or personal injury that may result from improper handling of the front shock absorber and gas cylinder.

- **Do not tamper or attempt to open the front shock absorber or gas cylinder.**
- **Do not subject the front shock absorber or gas cylinder to an open flame or any other source of high heat. High heat can cause an explosion due to excessive gas pressure.**

- **Do not deform or damage the front shock absorber or gas cylinder in any way. If the front shock absorber, gas cylinder or both are damaged, damping performance will suffer.**

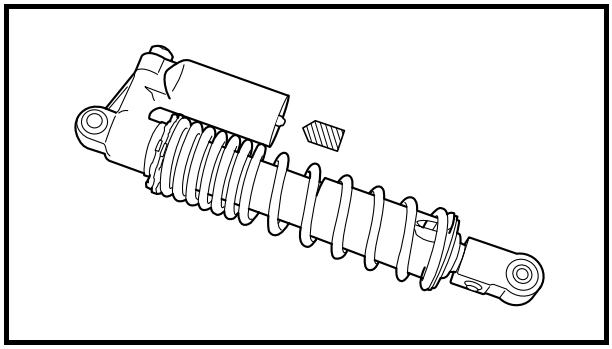

EBS00486

DISPOSING OF A FRONT SHOCK ABSORBER AND GAS CYLINDER

Gas pressure must be released before disposing of a front shock absorber and gas cylinder. To release the gas pressure, press on the gas valve needle with a suitable tool as shown, until all of the gas is released (the hissing has stopped).

WARNING

Wear eye protection to prevent eye damage from released gas or metal chips.

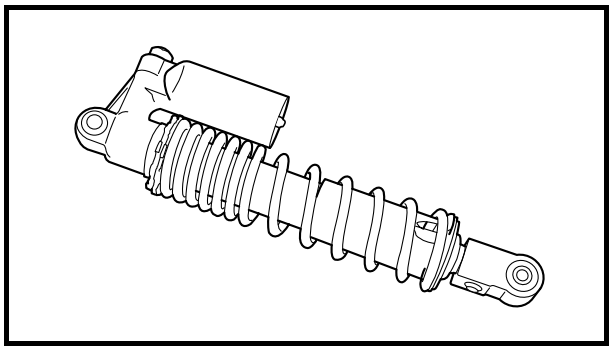

EBS00488

CHECKING THE FRONT SHOCK ABSORBERS

The following procedure applies to both of the front shock absorber assemblies.

1. Check:
   - shock absorber
     Oil leaks → Replace the front shock absorber assembly.
   - shock absorber rod
     Bends/damage → Replace the front shock absorber assembly.
   - spring
     Fatigue → Replace the front shock absorber assembly.
     Move the spring up and down.
   - gas cylinder
     Damage/gas leaks → Replace the front shock absorber assembly.

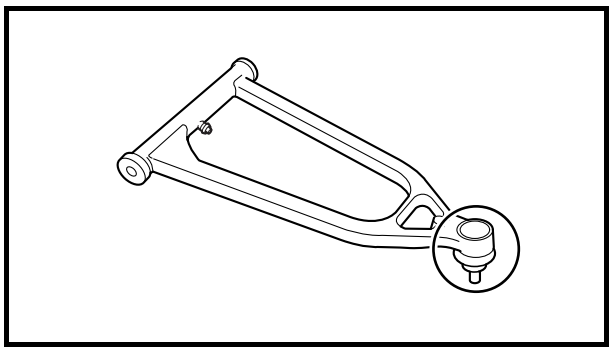

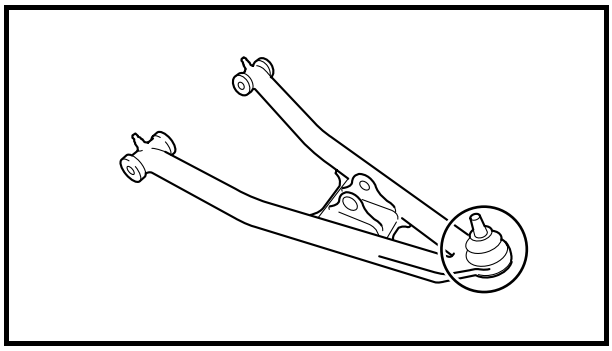

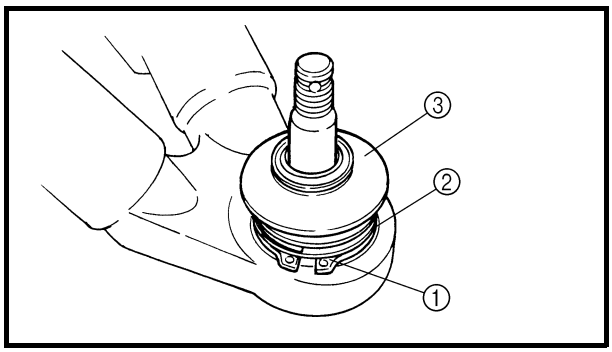

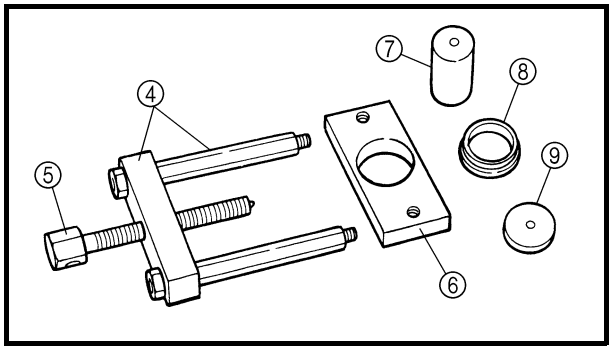

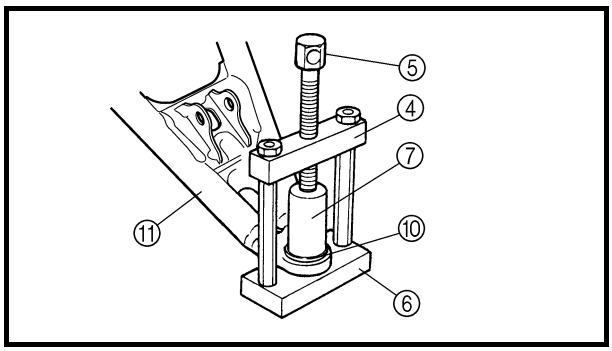

EBS00472

CHECKING THE BALL JOINTS

The following procedure applies to both of the front arm ball joints.

1. Check:
   - ball joint (upper front arm)
     Damage/pitting → Replace the upper front arm.
     Free play → Replace the front arm.
     Turns roughly → Replace the upper front arm.
2. Check:
   - ball joint (lower front arm)
     Damage/pitting → Replace the ball joint.
     Free play → Replace the ball joint.
     Turns roughly → Replace the ball joint.

▼▼▼▼▼▼▼▼▼▼▼▼▼▼▼▼▼▼▼▼▼▼▼▼▼▼▼▼▼▼▼▼▼▼

a. Clean the outside of the lower front arm.
b. Remove the circlip ①, boot retaining ring ② and rubber boot ③.
   Use the ball joint remover and installer set.

Ball joint remover/installer set P/N. YM-01474, 90890-01474 **Ball joint remover/installer attachment set P/N. YM-01480, 90890-01480**		
④	**Body**	**YM-01474 90890-01474**
⑤	**Long bolt**	
⑥	**Base**	**YM-01480 90890-01480**
⑦	**Remover attachment**	
⑧	**Installer spacer**	
⑨	**Installer washer**	

c. Install the body ④, long bolt ⑤, base ⑥ and attachment ⑦ onto ball joint.
d. Hold the body ④ in place while turning in the long bolt ⑤ to remove the ball joint ⑩ from the lower front arm ⑪.
e. Remove the ball joint remover/installer.

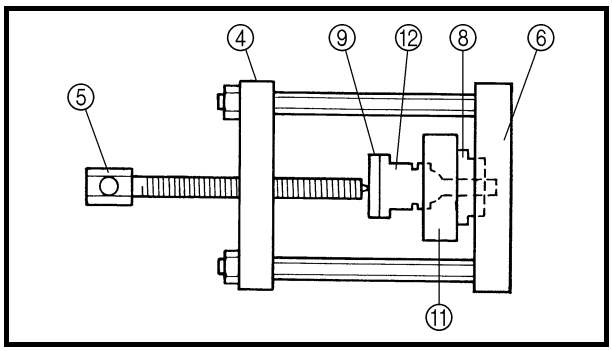

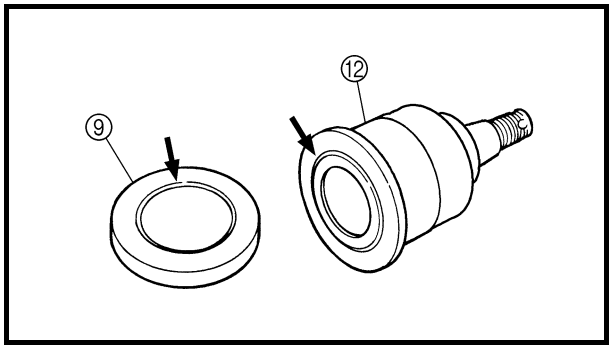

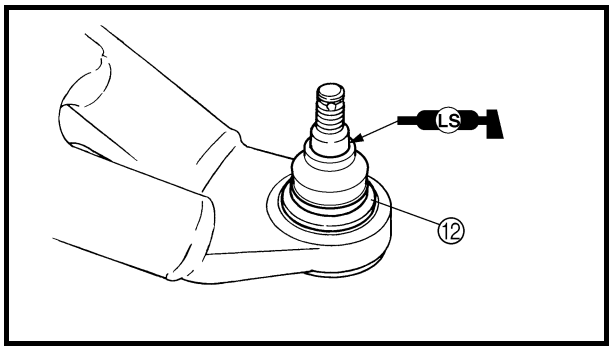

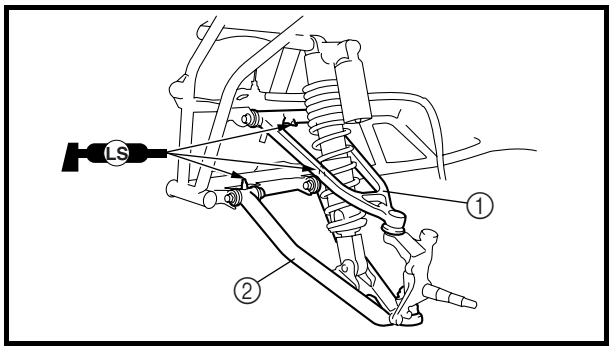

f. Attach the assembled ball joint remover/installer, new ball joint (with rubber boot and retaining ring) ⑫, installer spacer ⑧ and installer washer ⑨ to the lower front arm ⑪.

NOTE:
- Do not tap or damage the top of the ball joint.
- Installer spacer ⑧ must be aligned with the projection on the head of the ball joint ⑫.

g. Remove the ball joint remover/installer.
h. Install a new circlip.

NOTE:
Always use a new ball joint set.

▲▲▲▲▲▲▲▲▲▲▲▲▲▲▲▲▲▲▲▲▲▲▲▲▲▲▲▲▲▲▲▲▲▲

EBS00473

INSTALLING THE FRONT ARMS

The following procedure applies to both of the front arms.

1. Install:
   - upper front arm ①

     38 Nm (3.8 m · kg, 27 ft · lb)
   - lower front arm ②

     55 Nm (5.5 m · kg, 40 ft · lb)

NOTE:
- Be sure to position the bolts (upper and lower) so that the bolt head faces forward.
- Apply lithium-soap-based grease to the grease nipple.

EBS00484

REAR SHOCK ABSORBER AND RELAY ARM

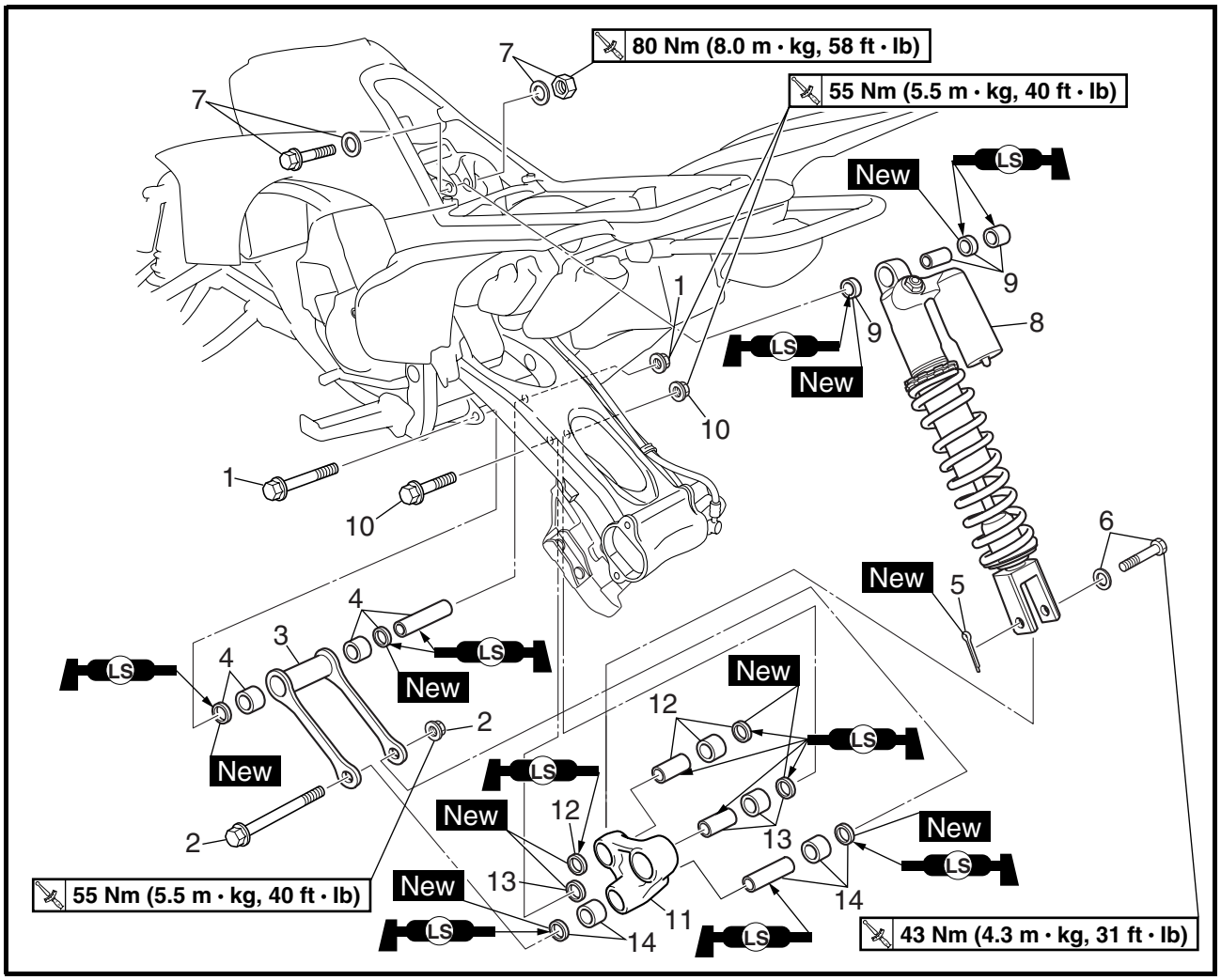

Order	Job/Part	Q'ty	Remarks
	Removing the rear shock absorber and relay arm		Remove the parts in the order listed.
	Seat/left foot protector		Refer to "SEAT, FENDERS AND FUEL TANK" in chapter 3.
	Muffler/exhaust pipe		Refer to "ENGINE REMOVAL" in chapter 4.
	Rear axle hub		Refer to "REAR AXLE AND REAR AXLE HUB".
1	Self-locking nut/bolt	1/1	
2	Self-locking nut/bolt	1/1	
3	Connecting arm	1	
4	Bearing/oil seal/spacer	2/2/1	Refer to "INSTALLING THE RELAY ARM AND CONNECTING ARM".
5	Cotter pin	1	

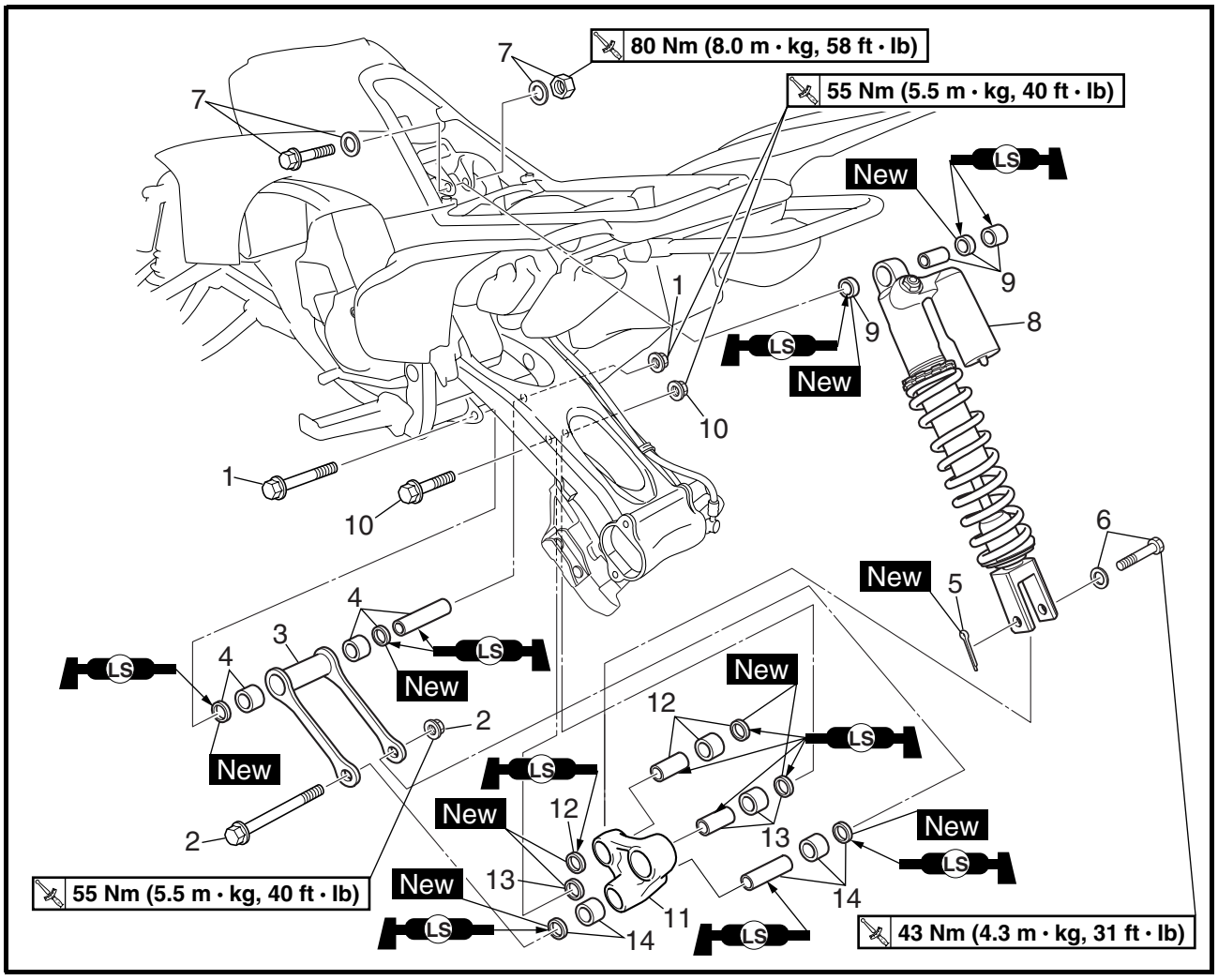

Order	Job/Part	Q'ty	Remarks
6	Bolt/washer	1/1	Refer to "REMOVING THE REAR SHOCK ABSORBER" and "INSTALLING THE REAR SHOCK ABSORBER".
7	Self-locking nut/bolt/washer	1/1/2	
8	Rear shock absorber	1	
9	Dust seal/bearing/spacer	2/1/1	
10	Self-locking nut/bolt	1/1	
11	Relay arm	1	
12	Spacer/bearing/oil seal	1/1/2	Refer to "INSTALLING THE RELAY ARM AND CONNECTING ARM".
13	Spacer/bearing/oil seal	1/1/2	
14	Spacer/bearing/oil seal	1/2/2	
			For installation, reverse the removal procedure.

EBS00485

HANDLING THE REAR SHOCK ABSORBER AND GAS CYLINDER

WARNING

This rear shock absorber and gas cylinder contain highly compressed nitrogen gas. Before handling the rear shock absorber or gas cylinder, read and make sure you understand the following information. The manufacturer cannot be held responsible for property damage or personal injury that may result from improper handling of the rear shock absorber and gas cylinder.

- **Do not tamper or attempt to open the rear shock absorber or gas cylinder.**
- **Do not subject the rear shock absorber or gas cylinder to an open flame or any other source of high heat. High heat can cause an explosion due to excessive gas pressure.**
- **Do not deform or damage the rear shock absorber or gas cylinder in any way. If the rear shock absorber, gas cylinder or both are damaged, damping performance will suffer.**

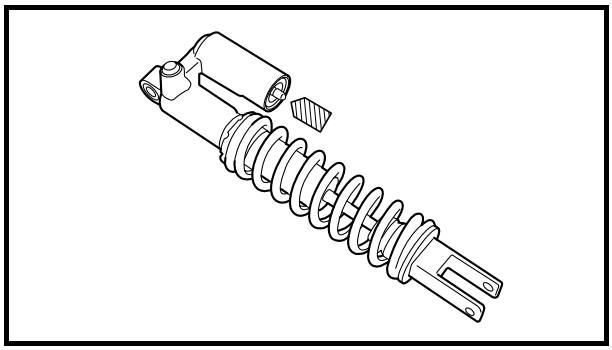

EBS00486

DISPOSING OF A REAR SHOCK ABSORBER AND GAS CYLINDER

Gas pressure must be released before disposing of a rear shock absorber and gas cylinder. To release the gas pressure, press on the gas valve needle with a suitable tool as shown, until all of the gas is released (the hissing has stopped).

WARNING

Wear eye protection to prevent eye damage from released gas or metal chips.

EBS00487
REMOVING THE REAR SHOCK ABSORBER

1. Remove:
   - relay arm-to-rear shock absorber lower bolt
   - rear shock absorber upper bolt

NOTE:
While removing the relay arm-to-rear shock absorber lower bolt, hold the swingarm so that it does not drop down.

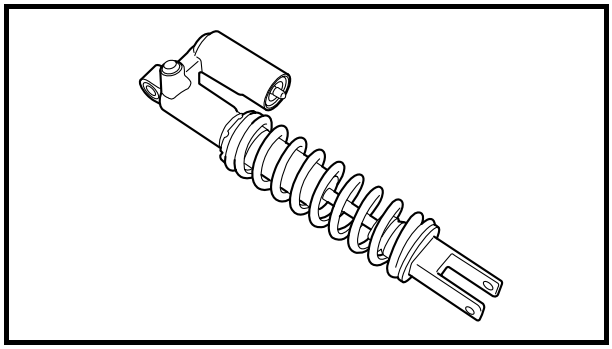

EBS00488
CHECKING THE REAR SHOCK ABSORBER

1. Check:
   - shock absorber
     Oil leaks → Replace the rear shock absorber assembly.
   - shock absorber rod
     Bends/damage → Replace the rear shock absorber assembly.
   - spring
     Fatigue → Replace the rear shock absorber assembly.
     Move the spring up and down.
   - gas cylinder
     Damage/gas leaks → Replace the rear shock absorber assembly.

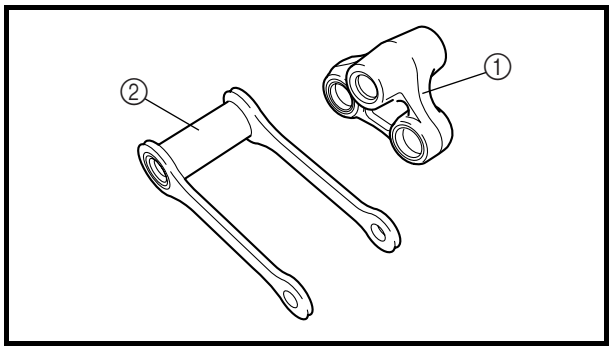

EBS00489
CHECKING THE RELAY ARM AND CONNECTING ARM

1. Check:
   - relay arm ①
   - connecting arm ②
     Damage/wear → Replace.
   - bushings
   - spacers
   - oil seals
     Damage/pitting/scratches → Replace.

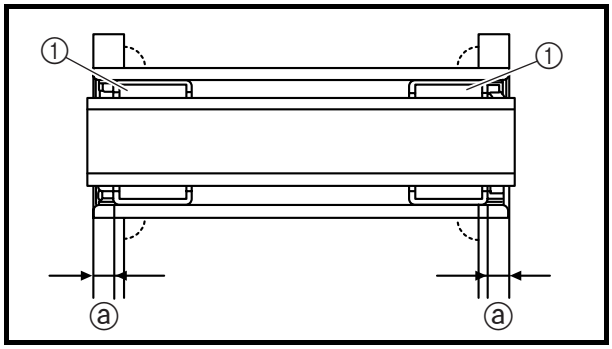

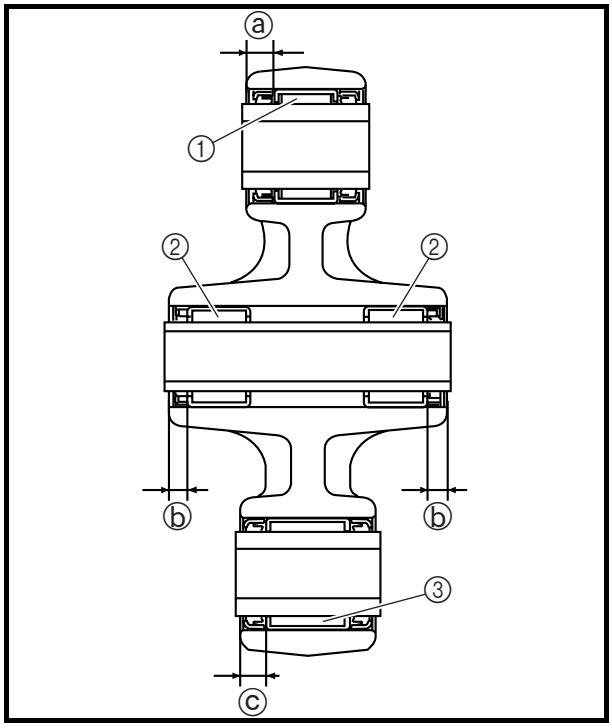

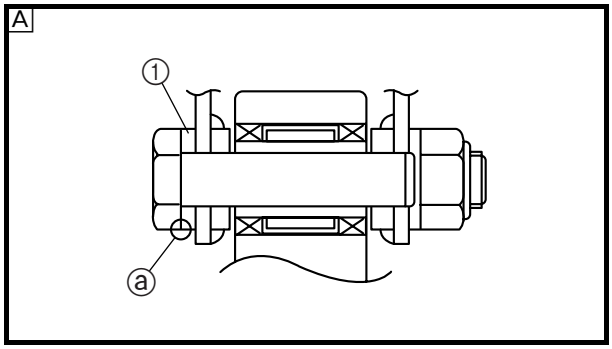

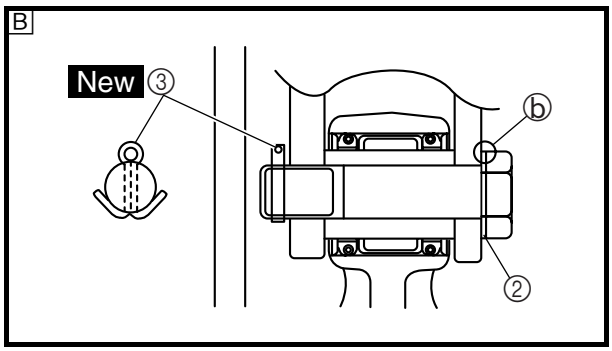

EBS00490

INSTALLING THE RELAY ARM AND CONNECTING ARM

1. Install:
   - bearing ①
     (to connecting arm)

Installed depth of bearing ⓐ
4 mm (0.16 in)

2. Install:
   - bearings ① to ③
     (to relay arm)

Installed depth of bearing ⓐ
6.5 mm (0.26 in)
Installed depth of bearing ⓑ
5.0 mm (0.20 in)
Installed depth of bearing ⓒ
6.0 mm (0.24 in)

EBS00491

INSTALLING THE REAR SHOCK ABSORBER

1. Install:
   - relay arm
   - rear shock absorber
   - bolts
   - washer ①
   - washer ②
   - cotter pin ③ New

NOTE:

- When installing the rear shock absorber, lift up the swingarm.
- Make sure that the blunt-edged corner ⓐ of the washer is facing outward.
- Make sure that the sharp-edged corner ⓑ of the washer is facing outward.
- Install the cotter pin and bend the ends as shown.

A Rear shock absorber upper side
a Rear shock absorber lower side

EBS00492

SWINGARM AND DRIVE CHAIN

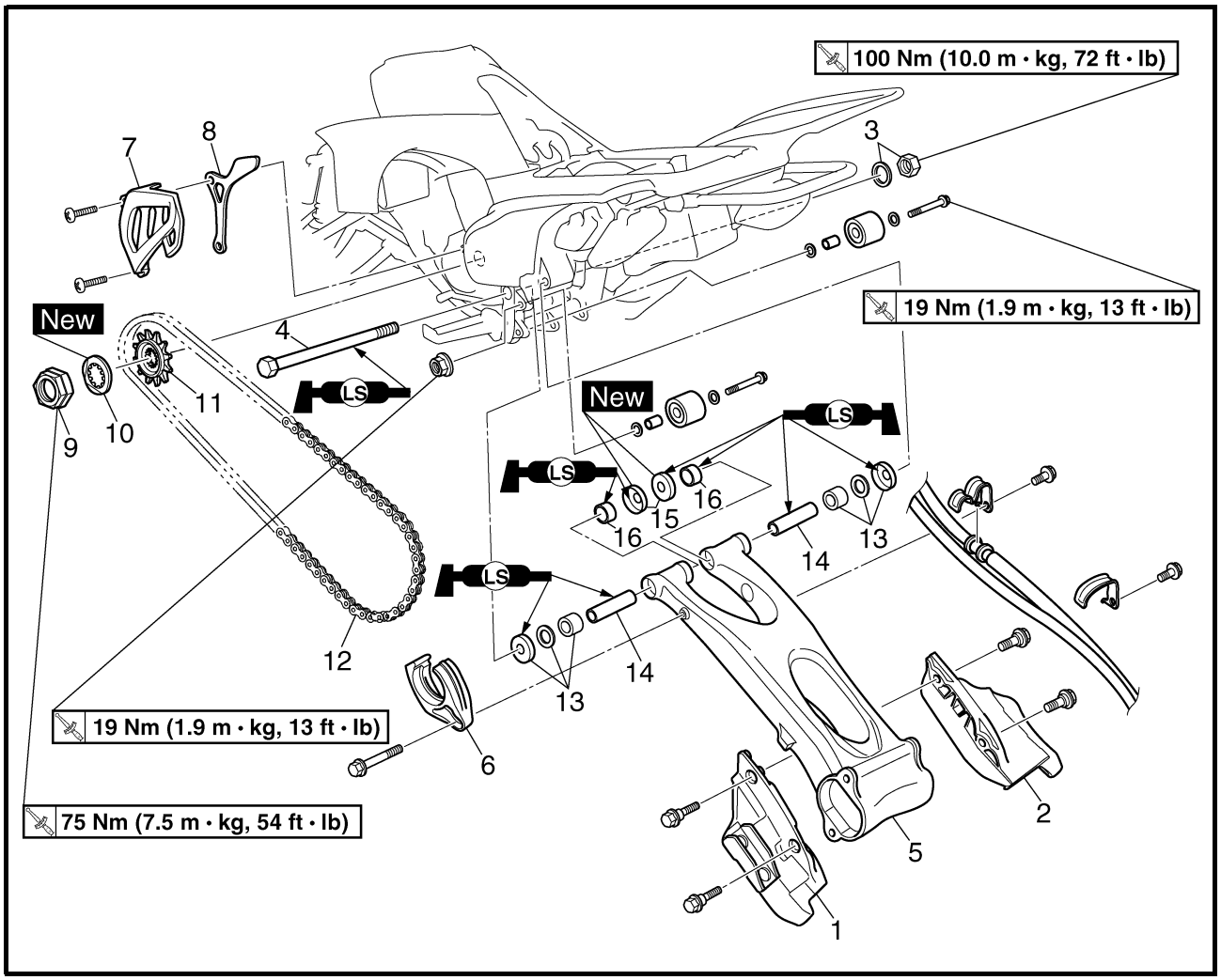

Order	Job/Part	Q'ty	Remarks
	Removing the swingarm and drive chain		Remove the parts in the order listed.
	Rear axle hub		Refer to "REAR AXLE AND REAR AXLE HUB".
	Rear shock absorber		Refer to "REAR SHOCK ABSORBER AND RELAY ARM".
1	Drive chain guard	1	
2	Rear brake disc guard	1	
3	Pivot shaft nut/washer	1/1	
4	Pivot shaft	1	
5	Swingarm	1	
6	Drive chain guide 1	1	
7	Drive sprocket cover	1	

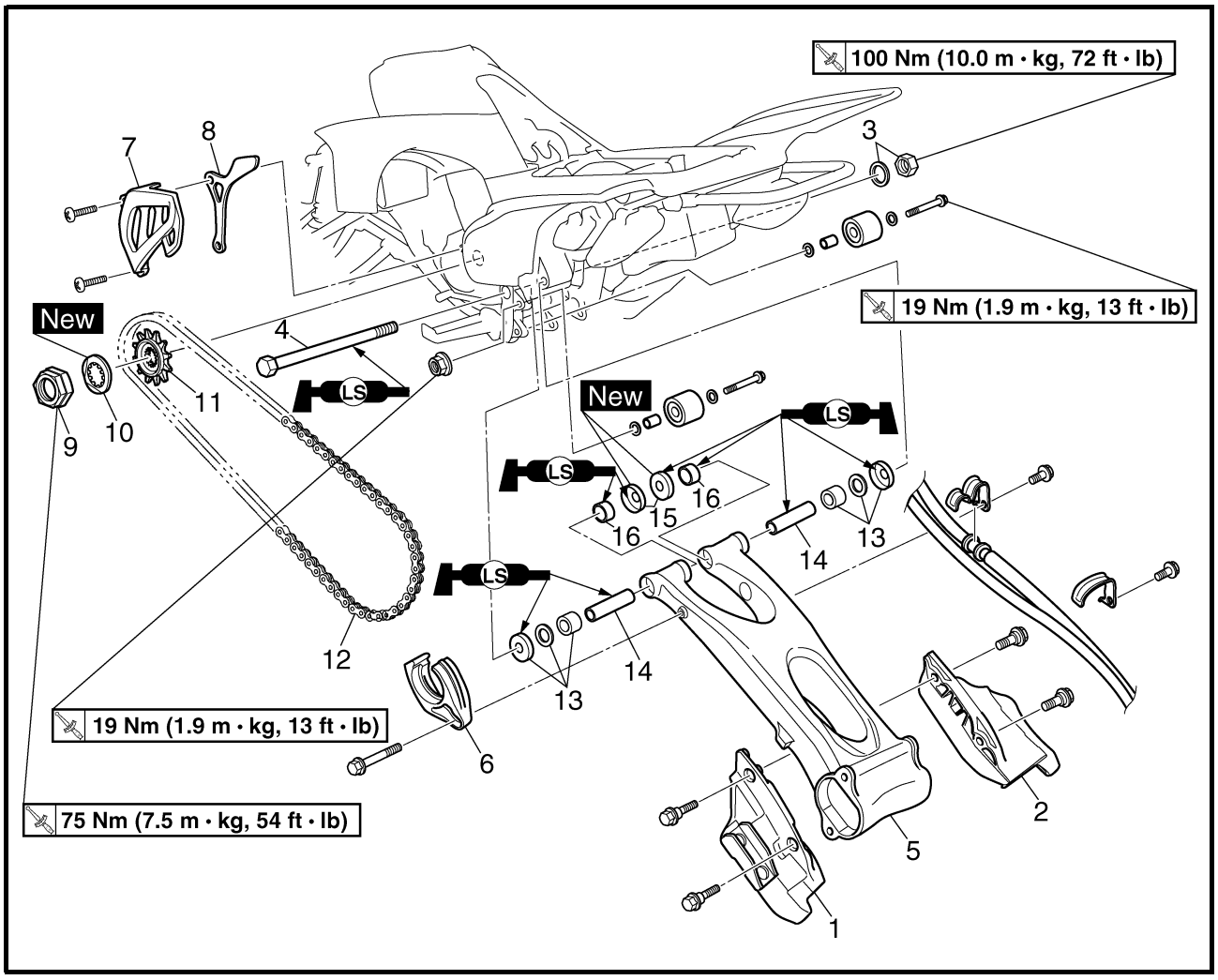

Order	Job/Part	Q'ty	Remarks
8	Drive chain guide 2	1	Refer to "INSTALLING THE DRIVE SPROCKET".
9	Nut	1	
10	Lock washer	1	
11	Drive sprocket	1	
12	Drive chain	1	
13	Dust cover/washer/bearing	2/2/2	Refer to "INSTALLING THE SWINGARM".
14	Spacer	2	
15	Oil seal	2	
16	Bushing	2	
			For installation, reverse the removal procedure.

EBS00493

NOTE:

Before removing the drive chain and the sprockets, measure the drive chain slack and a 15-link section of the drive chain.

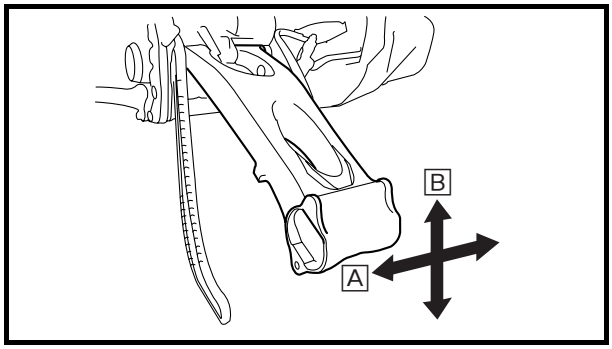

EBS00494

REMOVING THE SWINGARM

1. Check:
   - swingarm free play

▼▼▼▼▼▼▼▼▼▼▼▼▼▼▼▼▼▼▼▼▼▼▼▼▼▼▼▼▼▼▼▼▼▼▼▼▼▼

a. Check the tightening torque of the pivot shaft nut.

	**Pivot shaft nut** **100 Nm (10.0 m · kg, 72 ft · lb)**

b. Check the swingarm side play [A] by moving it from side to side.
   If side play is noticeable, check the spacers, bearings, bushings and frame pivot.

c. Check the swingarm vertical movement [B] by moving it up and down.
   If vertical movement is tight or rough, or if there is binding, check the spacers, bearings, bushings and frame pivot.

▲▲▲▲▲▲▲▲▲▲▲▲▲▲▲▲▲▲▲▲▲▲▲▲▲▲▲▲▲▲▲▲▲▲▲▲▲▲

2. Remove:
   - pivot shaft nut
   - washer
   - pivot shaft
   - swingarm

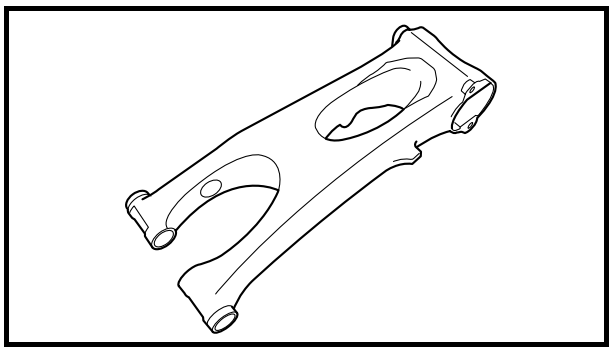

EBS00495

CHECKING THE SWINGARM

1. Check:
   - swingarm
     Bends/cracks/damage → Replace.

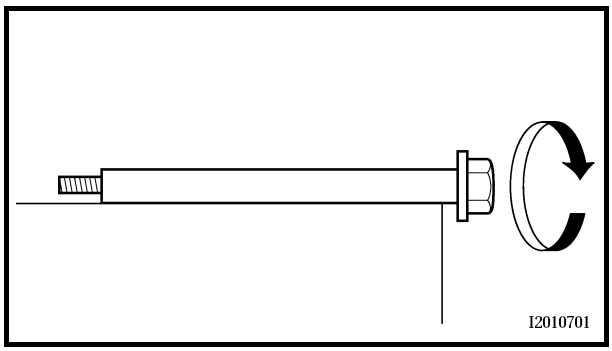

2. Check:
   - pivot shaft
     Roll the axle on a flat surface.
     Bends → Replace.

WARNING

Do not attempt to straighten a bent pivot shaft.

3. Clean:
   - pivot shaft
   - spacer
   - bearings
   - bushings

Recommended cleaning solvent
Kerosene

4. Check:
   - oil seals
     Damage/wear → Replace.
   - bearings
   - bushings
     Damage/pitting → Replace.

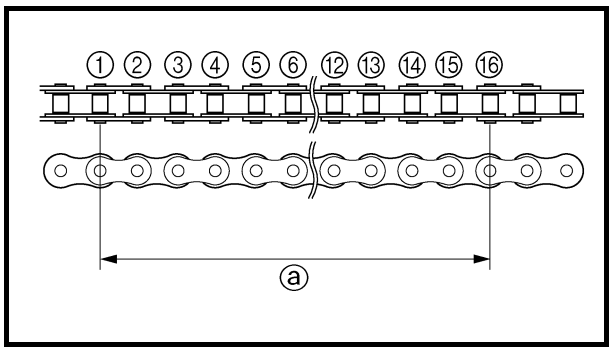

EBS00496

CHECKING THE DRIVE CHAIN

1. Measure:
   - 15-link section ⓐ of the drive chain
     Out of specification → Replace the drive chain.

15-link drive chain section limit (maximum)
240.5 mm (9.47 in)

NOTE:
- While measuring the 15-link section, push down on the drive chain to increase its tension.
- Measure the length between drive chain roller ① and ⑯ as shown.
- Perform this measurement at two or three different places.

2. Check:
   - drive chain
     Stiffness → Clean and lubricate or replace.
3. Clean:
   - drive chain

▼▼▼▼▼▼▼▼▼▼▼▼▼▼▼▼▼▼▼▼▼▼▼▼▼▼▼▼▼▼▼▼▼▼

a. Wipe the drive chain with a clean cloth.
b. Put the drive chain in kerosene and remove any remaining dirt.
c. Remove the drive chain from the kerosene and completely dry it.

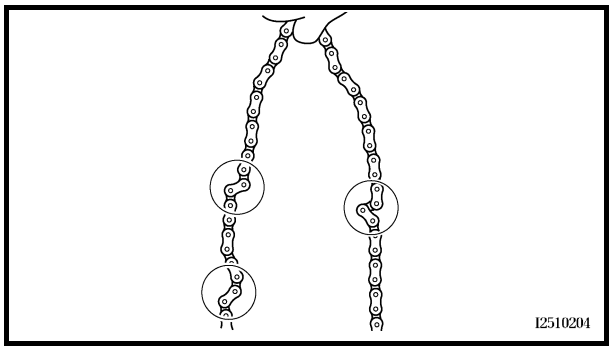

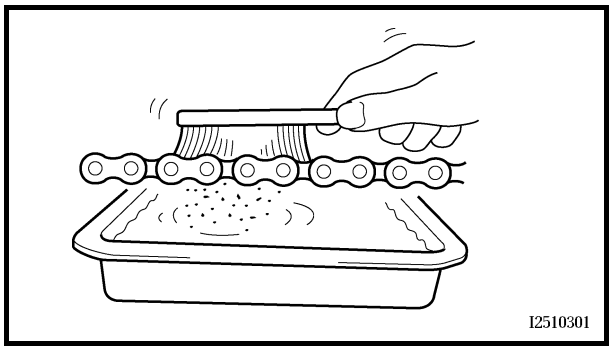

CAUTION:

This machine has a drive chain with small rubber O-rings ① between the drive chain side plates. Never use high-pressure water or air, steam, gasoline, certain solvents (e.g., benzine), or a coarse brush to clean the drive chain. High-pressure methods could force dirt or water into the drive chain's internal parts, and solvents will deteriorate the O-rings. A coarse brush can also damage the O-rings. Therefore, use only kerosene to clean the drive chain. Don't soak the drive chain in kerosene for more than ten minutes. Kerosene will damage the O-rings.

▲▲▲▲▲▲▲▲▲▲▲▲▲▲▲▲▲▲▲▲▲▲▲▲▲▲▲▲▲▲▲▲▲▲

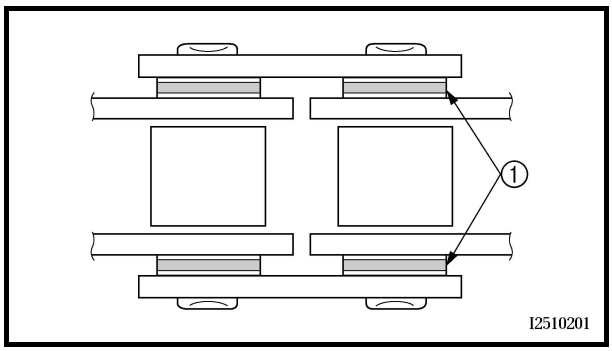

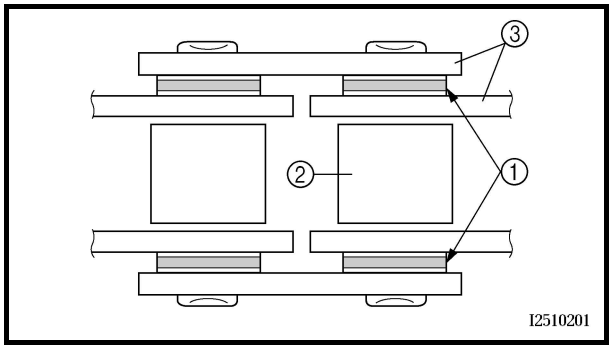

4. Check:
   - O-rings ①
     Damage → Replace the drive chain.
   - drive chain rollers ②
     Damage/wear → Replace the drive chain.
   - drive chain side plates ③
     Cracks/damage/wear → Replace the drive chain.
5. Lubricate:
   - drive chain

Recommended lubricant
Engine oil or chain lubricant suitable for O-ring chains

6. Check:
   - drive sprocket
   - driven sprocket
     More than 1/4 tooth ⓐ wear → Replace the drive chain sprockets as a set.
     Bent teeth → Replace the drive chain sprockets as a set.

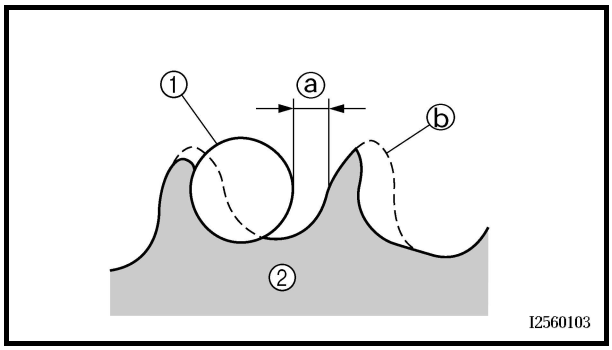

ⓑ Correct
① Drive chain roller
② Drive chain sprocket

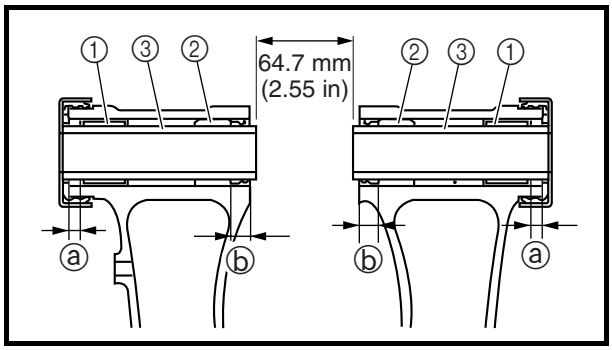

EBS00497
INSTALLING THE SWINGARM

1. Install:
   - bearings ①
   - bushings ②
     (to swingarm)
   - spacer ③

NOTE:
Apply the lithium-soap-based grease on the bushing when installing.

Installed depth of bearing ⓐ
5 mm (0.20 in)
Installed depth of bushing ⓑ
8 mm (0.31 in)

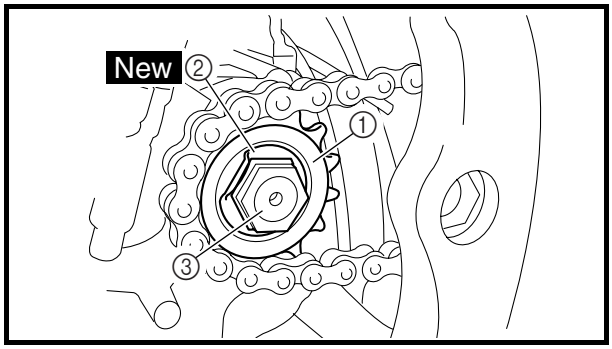

EBS00498

INSTALLING THE DRIVE SPROCKET

1. Install:
   - drive sprocket ①
   - lock washer ② New
   - nut ③ **75 Nm (7.5 m · kg, 54 ft · lb)**
2. Bend the lock washer tab along a flat side of the nut.

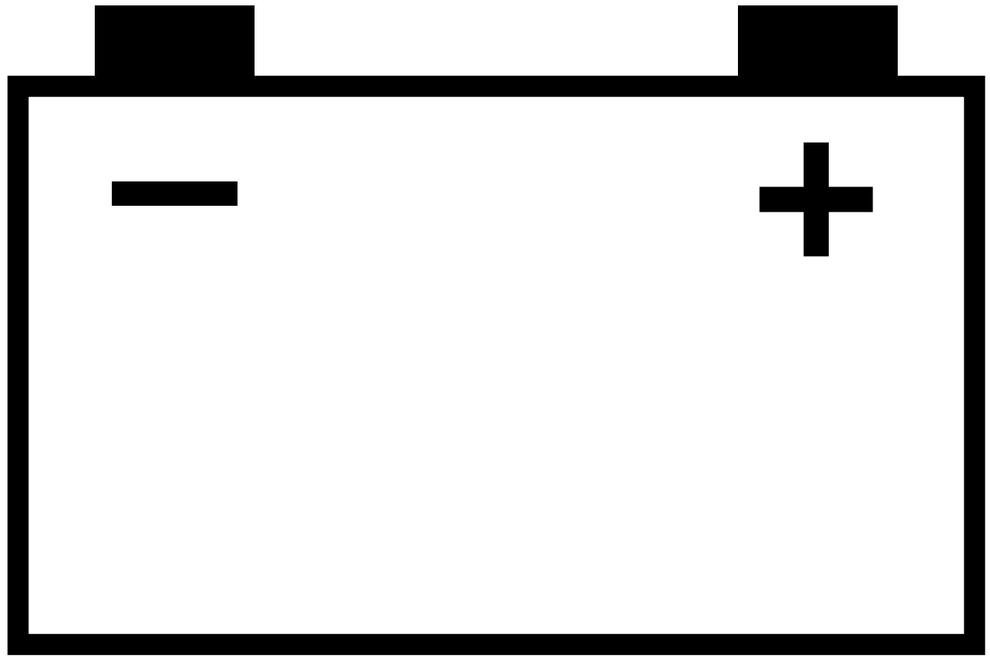

ELEC 8

CHAPTER 8
ELECTRICAL

EBS00500

ELECTRICAL

ELECTRICAL COMPONENTS

① Main switch
② Throttle switch
③ Front brake light switch
④ Indicator light
⑤ Clutch switch
⑥ Handlebar switch
⑦ Fuse
⑧ Starter relay
⑨ Starting circuit cut-off relay
⑩ Tail/brake light
⑪ Battery
⑫ Ignition coil
⑬ Spark plug
⑭ Throttle position sensor
⑮ Carburetor switch
⑯ Thermo switch 2
⑰ Pickup coil/stator assembly
⑱ Neutral switch
⑲ Rear brake light switch
⑳ Radiator fan
㉑ Circuit breaker (fan motor)
㉒ Rectifier/regulator
㉓ C.D.I. unit
㉔ Headlight
㉕ Diode 2
㉖ Diode 1
㉗ Thermo switch 1

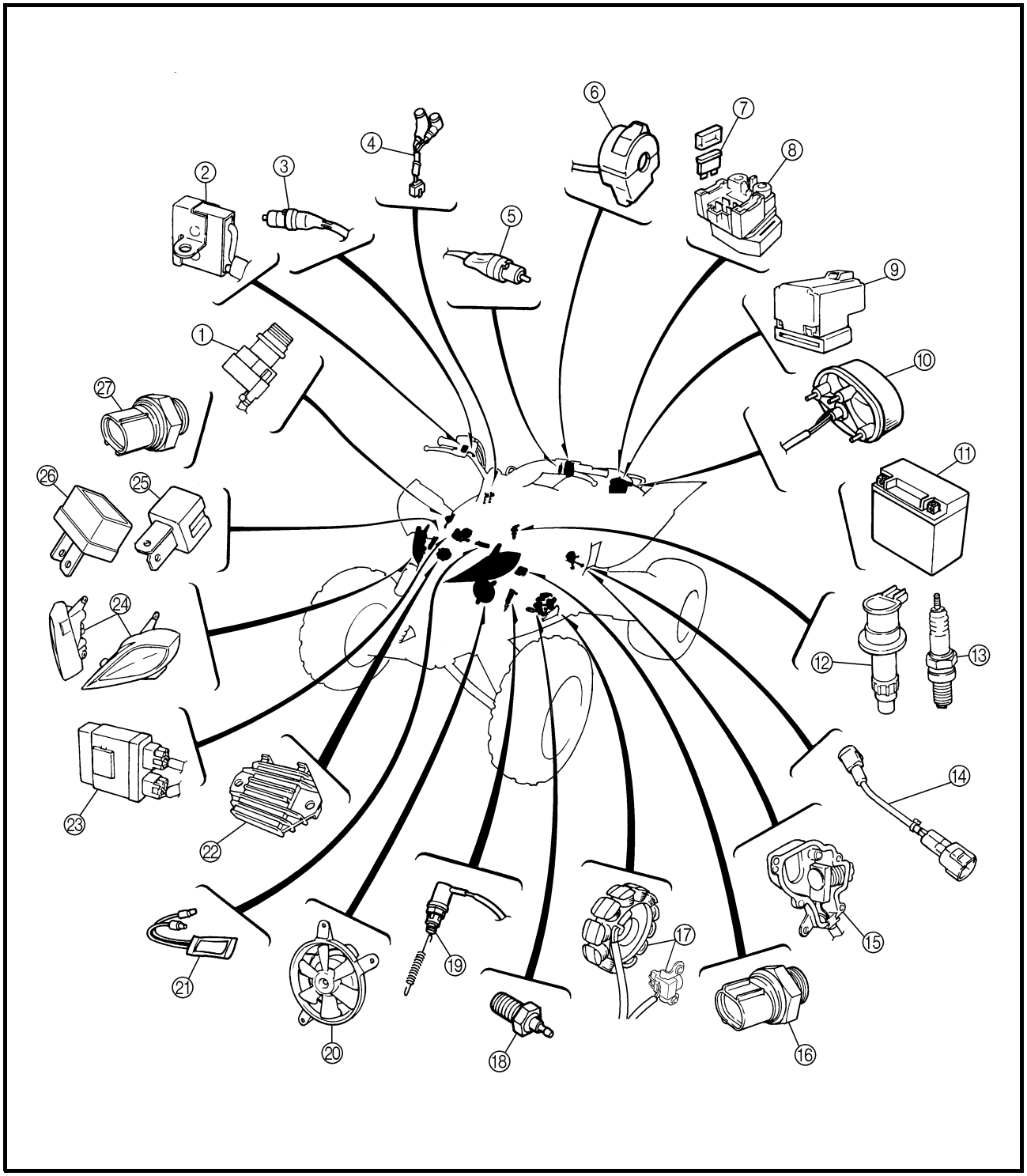

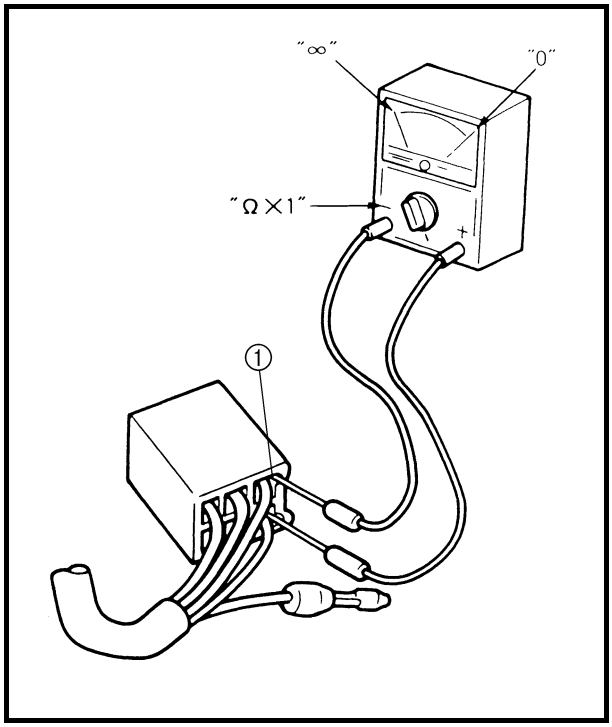

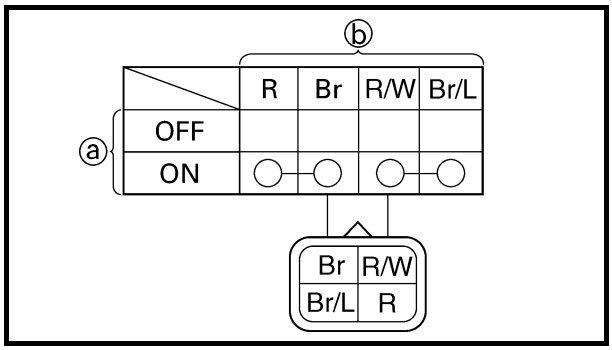

EBS01028

CHECKING SWITCH CONTINUITY

Check each switch for continuity with the pocket tester. If the continuity reading is incorrect, check the wiring connections and if necessary, replace the switch.

CAUTION:

Never insert the tester probes into the coupler terminal slots ①. Always insert the probes from the opposite end of the coupler, taking care not to loosen or damage the leads.

Pocket tester
P/N. YU-03112-C, 90890-03112

NOTE:

- Before checking for continuity, set the pocket tester to "0" and to the "Ω × 1" range.
- When checking for continuity, switch back and forth between the switch positions a few times.

The terminal connections for switches (e.g., main switch, engine stop switch) are shown in an illustration similar to the one on the left.
The switch positions ⓐ are shown in the far left column and the switch lead colors ⓑ are shown in the top row in the switch illustration.

NOTE:

"○——○" indicates a continuity of electricity between switch terminals (i.e., a closed circuit at the respective switch position).

The example illustration on the left shows that:

There is continuity between the switch terminals for the red and brown switch leads and between the switch terminals for the red/white and brown/blue switch leads when the switch is set to "ON".

EBS01029

CHECKING THE SWITCHES

Check each switch for damage or wear, proper connections, and also for continuity between the terminals. Refer to “CHECKING SWITCH CONTINUITY”.

Damage/wear → Repair or replace.
Improperly connected → Properly connect.
Incorrect continuity reading → Replace the switch.

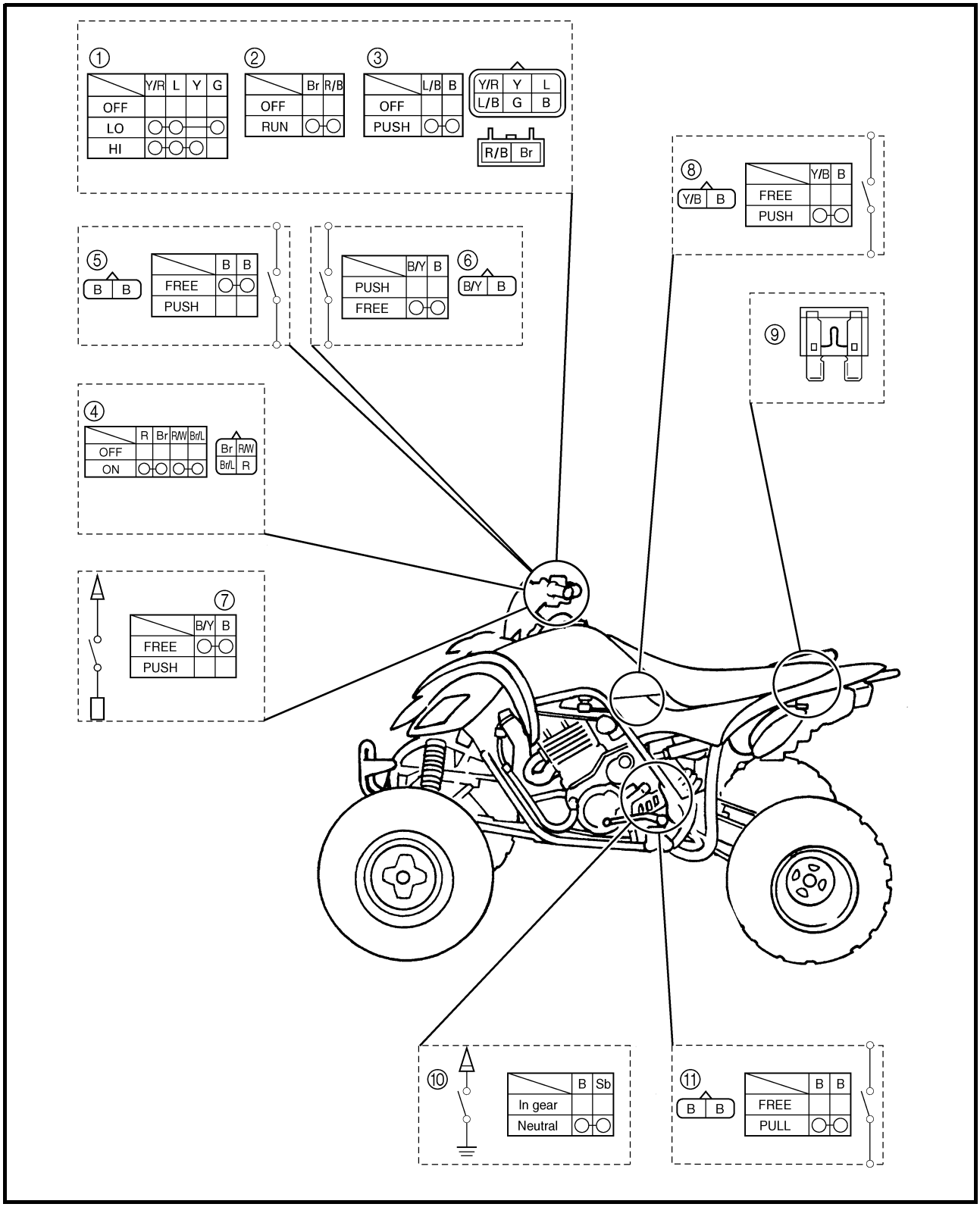

① Light switch
② Engine stop switch
③ Start switch
④ Main switch
⑤ Front brake light switch
⑥ Throttle switch
⑦ Clutch switch
⑧ Carburetor switch
⑨ Fuse
⑩ Neutral switch
⑪ Rear brake light switch

EBS01030

CHECKING THE BULBS AND BULB SOCKETS

Check each bulb and bulb socket for damage or wear, proper connections, and also for continuity between the terminals.

Damage/wear → Repair or replace the bulb, bulb socket or both.
Improperly connected → Properly connect.
No continuity → Repair or replace the bulb, bulb socket or both.

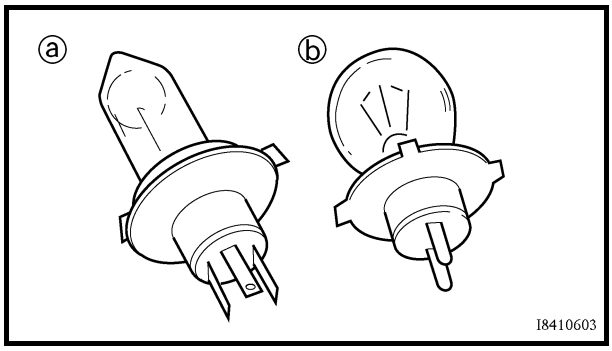

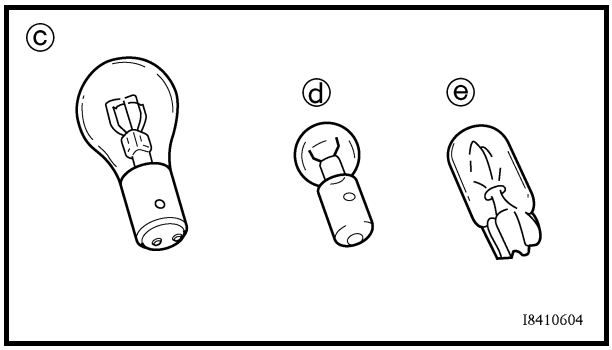

TYPES OF BULBS

The bulbs used on this machine are shown in the illustration on the left.

- Bulbs ⓐ and ⓑ are used for the headlights and usually use a bulb holder that must be detached before removing the bulb. The majority of these types of bulbs can be removed from their respective socket by turning them counterclockwise.
- Bulbs ⓒ is used for turn signal and tail/brake lights and can be removed from the socket by pushing and turning the bulb counterclockwise.
- Bulbs ⓓ and ⓔ are used for meter and indicator lights and can be removed from their respective socket by carefully pulling them out.

CHECKING THE CONDITION OF THE BULBS

The following procedure applies to all of the bulbs.

1. Remove:
   - bulb

WARNING

Since the headlight bulb gets extremely hot, keep flammable products and your hands away from the bulb until it has cooled down.

CAUTION:

- **Be sure to hold the socket firmly when removing the bulb. Never pull the lead, otherwise it may be pulled out of the terminal in the coupler.**
- **Avoid touching the glass part of the headlight bulb to keep it free from oil, otherwise the transparency of the glass, the life of the bulb, and the luminous flux will be adversely affected. If the headlight bulb gets soiled, thoroughly clean it with a cloth moistened with alcohol or lacquer thinner.**

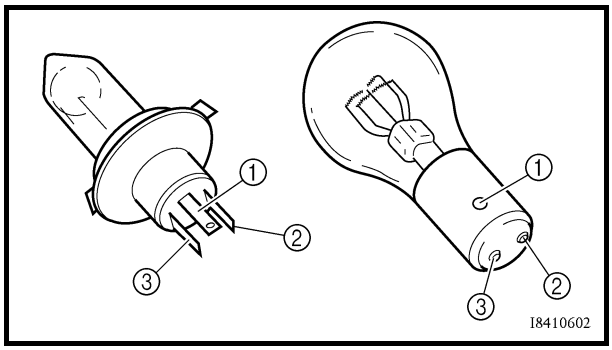

2. Check:
   - bulb (for continuity)
     (with the pocket tester)
     No continuity → Replace.

Pocket tester
P/N. YU-03112-C, 90890-03112

NOTE:
Before checking for continuity, set the pocket tester to "0" and to the "Ω × 1" range.

▼▼▼▼▼▼▼▼▼▼▼▼▼▼▼▼▼▼▼▼▼▼▼▼▼▼▼▼▼▼▼▼▼▼

a. Connect the positive tester probe to terminal ① and the negative tester probe to terminal ②, and check the continuity.
b. Connect the positive tester probe to terminal ① and the negative tester probe to terminal ③, and check the continuity.
c. If either of the readings indicate no continuity, replace the bulb.

▲▲▲▲▲▲▲▲▲▲▲▲▲▲▲▲▲▲▲▲▲▲▲▲▲▲▲▲▲▲▲▲▲▲

CHECKING THE CONDITION OF THE BULB SOCKETS

The following procedure applies to all of the bulb sockets.

1. Check:
   - bulb socket (for continuity)
     (with the pocket tester)
     No continuity → Replace.

Pocket tester
P/N. YU-03112-C, 90890-03112

NOTE:
Check each bulb socket for continuity in the same manner as described in the bulb section; however, note the following.

▼▼▼▼▼▼▼▼▼▼▼▼▼▼▼▼▼▼▼▼▼▼▼▼▼▼▼▼▼▼▼▼▼

a. Install a good bulb into the bulb socket.
b. Connect the pocket tester probes to the respective leads of the bulb socket.
c. Check the bulb socket for continuity. If any of the readings indicate no continuity, replace the bulb socket.

▲▲▲▲▲▲▲▲▲▲▲▲▲▲▲▲▲▲▲▲▲▲▲▲▲▲▲▲▲▲▲▲▲

EBS00503

IGNITION SYSTEM

CIRCUIT DIAGRAM

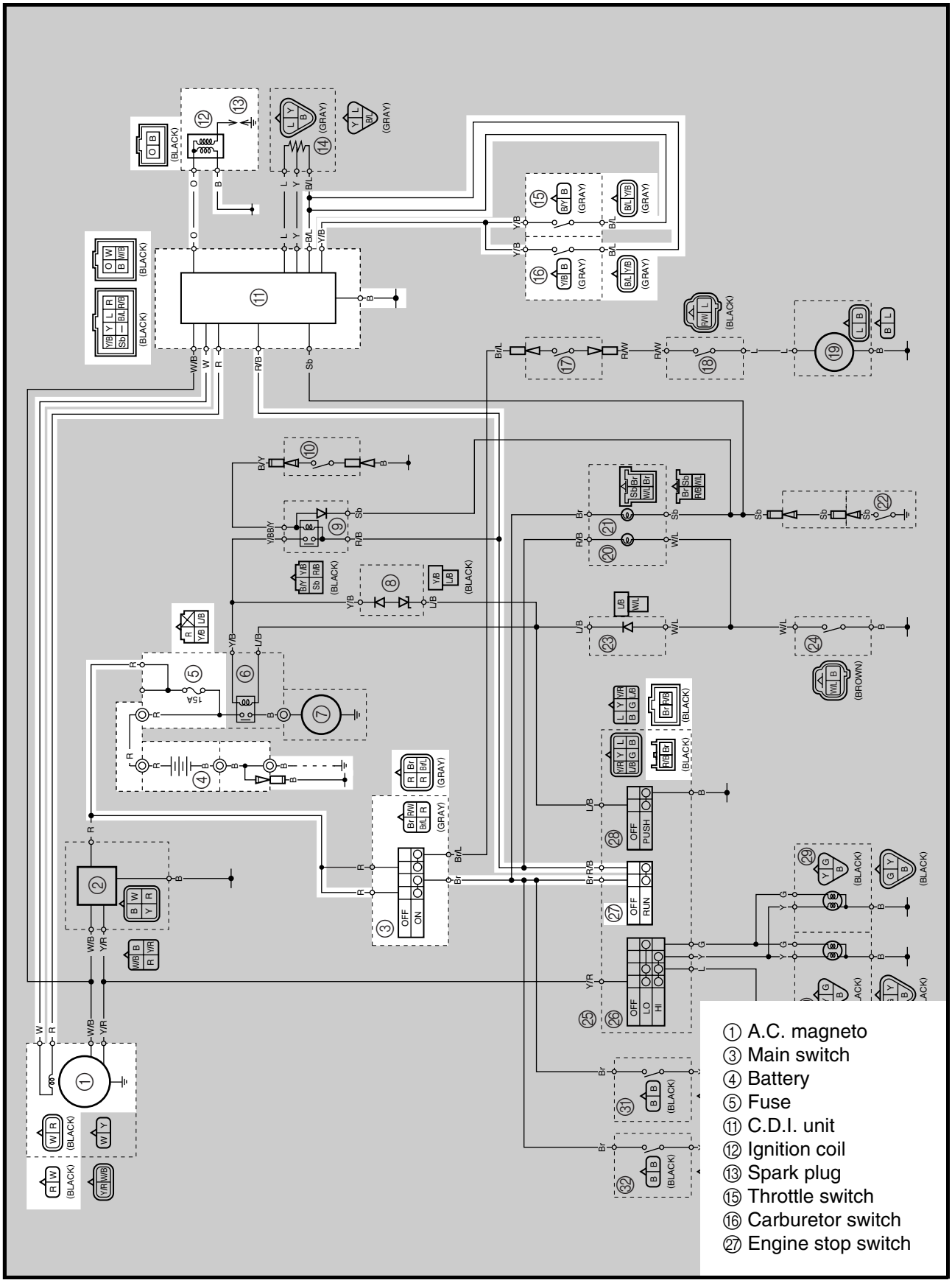

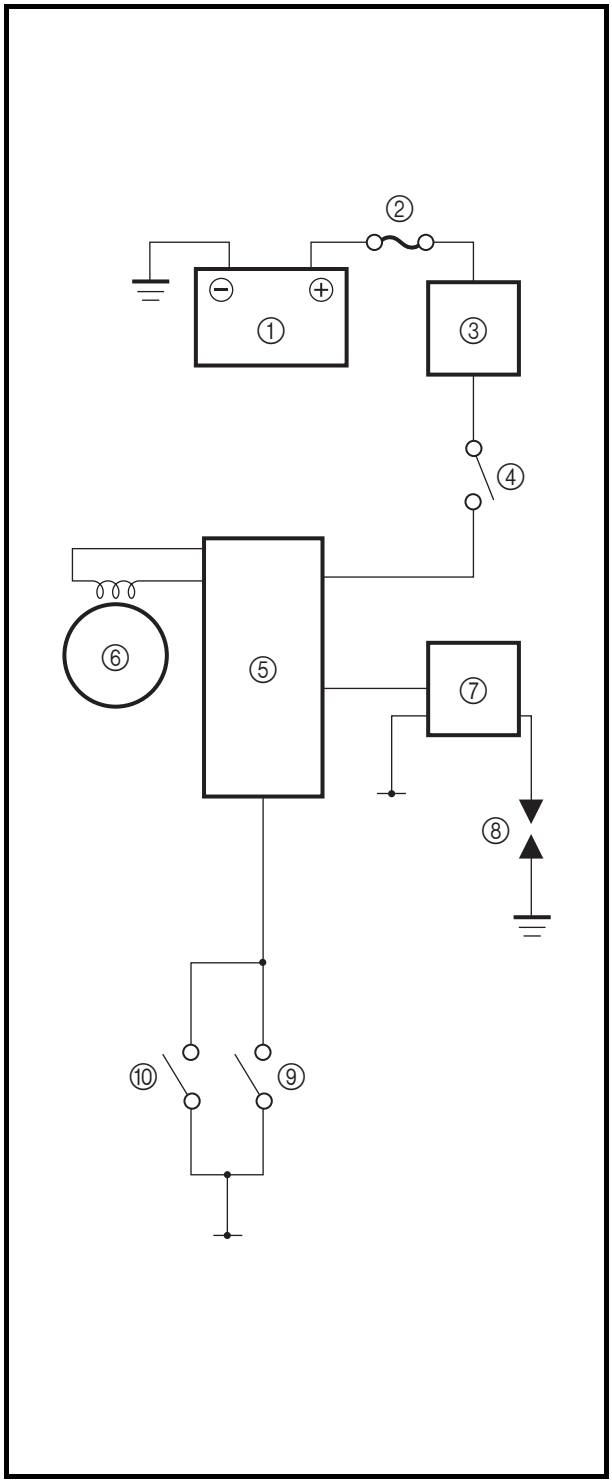

THROTTLE OVERRIDE SYSTEM (T.O.R.S.)
OPERATION

This model is equipped with a throttle override system as a safety device that operates according to the positions of the throttle switch and carburetor switch and stops the flow of electricity from the C.D.I. unit to the ignition coil to stop the engine if the carburetor or throttle cable malfunctions during operation.

- The throttle switch is open when the switch is pushed.
- The carburetor switch is open when the switch is not pushed.
- When both the throttle switch and carburetor switch are open, the throttle override system operates and the engine stops.

① Battery
② Fuse
③ Main switch
④ Engine stop switch
⑤ C.D.I. unit
⑥ A.C. magneto
⑦ Ignition coil
⑧ Spark plug
⑨ Throttle switch
⑩ Carburetor switch

EBS01045

TROUBLESHOOTING

The ignition system fails to operate (no spark or intermittent spark).

Check:
1. fuse
2. battery
3. spark plug
4. ignition spark gap
5. ignition coil resistance
6. main switch
7. engine stop switch
8. throttle switch
9. carburetor switch
10. pickup coil resistance
11. wiring connections (of the entire ignition system)

NOTE:
- Before troubleshooting, remove the following part(s):
1. seat
2. fuel tank cover
3. side covers (left and light)
4. fuel tank
5. front fender
- Troubleshoot with the following special tool(s).

Dynamic spark tester
P/N. YM-34487
Ignition checker
90890-06754
Pocket tester
P/N. YU-03112-C, 90890-03112

EBS01043

1. Fuse
- Check the fuse for continuity.
  Refer to "CHECKING THE SWITCHES".
- Is the fuse OK?

YES → NO → Replace the fuse.

EBS01044

2. Battery
- Check the condition of the battery.
  Refer to "CHECKING AND CHARGING THE BATTERY" in chapter 3.

Minimum open-circuit voltage
12.8 V or more at 20 °C (68 °F)

- Is the battery OK?

YES → NO → Clean the battery terminals. Recharge or replace the battery.

EBS01032

3. Spark plug
- Check the condition of the spark plug.
- Check the spark plug type.
- Measure the spark plug gap.
  Refer to "CHECKING THE SPARK PLUG" in chapter 3.

Standard spark plug
CR8E (NGK)
Spark plug gap
0.7 ~ 0.8 mm (0.028 ~ 0.031 in)

- Is the spark plug in good condition, is it of the correct type, and is its gap within specification?

YES → NO → Re-gap or replace the spark plug.

EBS01034
For USA and CDN

4. Ignition spark gap

- Disconnect the ignition coil from the spark plug.
- Connect the dynamic spark tester ① as shown.

② Ignition coil

- Set the main switch to “ON”.
- Measure the ignition spark gap ⓐ.
- Crank the engine by pushing the start switch and gradually increase the spark gap until a misfire occurs.

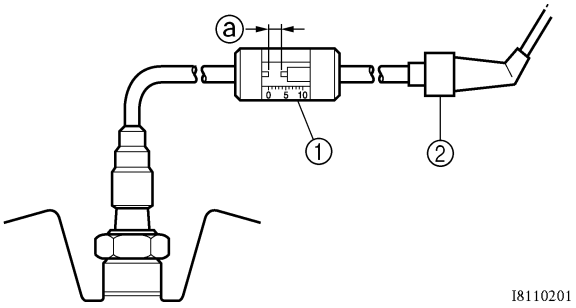

Minimum ignition spark gap
6 mm (0.24 in)

- Is there a spark and is the spark gap within specification?

NO → YES → The ignition system is OK.

EBS01034
For Europe and Oceania

4. Ignition spark gap

- Disconnect the ignition coil from the spark plug.
- Connect the ignition checker ① as shown.

② Ignition coil

- Set the main switch to “ON”.
- Measure the ignition spark gap ⓐ.
- Crank the engine by pushing the start switch and gradually increase the spark gap until a misfire occurs.

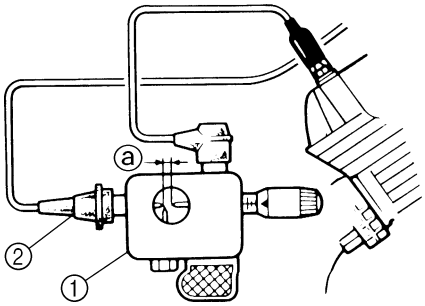

Minimum ignition spark gap
6 mm (0.24 in)

- Is there a spark and is the spark gap within specification?

NO → YES → The ignition system is OK.

EBS01038

5. Ignition coil resistance

- Disconnect the ignition coil coupler from the ignition coil.
- Connect the pocket tester (Ω × 1) to the ignition coil as shown.

Positive tester probe →
orange lead terminal ①
Negative tester probe →
black lead terminal ②

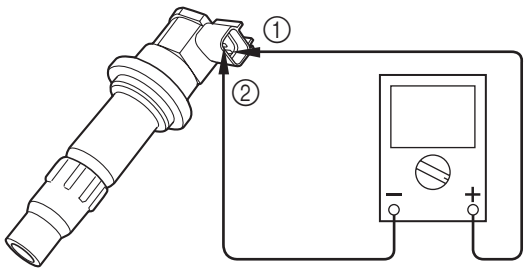

- Measure the primary coil resistance.

Primary coil resistance
0.08 ~ 0.10 Ω at 20 °C (68 °F)

- Connect the pocket tester (Ω × 1k) to the ignition coil as shown.

Negative tester probe →
black lead terminal ①
Positive tester probe →
ignition coil terminal ②

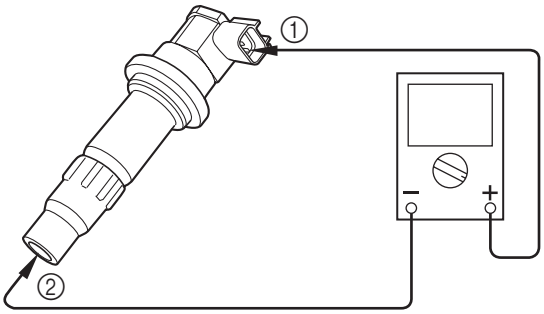

- Measure the secondary coil resistance.

Secondary coil resistance
4.56 ~ 6.84 kΩ at 20 °C (68 °F)

- Is the ignition coil OK?

YES → NO → Replace the ignition coil.

EBS01041

6. Main switch

- Check the main switch for continuity.
  Refer to "CHECKING THE SWITCHES".
- Is the main switch OK?

YES → NO → Replace the main switch.

EBS01042

7. Engine stop switch

- Check the engine stop switch for continuity.
  Refer to "CHECKING THE SWITCHES".
- Is the engine stop switch OK?

YES → NO → Replace the handlebar switch.

8. Throttle switch

- Check the throttle switch for continuity.
  Refer to "CHECKING THE SWITCHES".
- Is the throttle switch OK?

YES → NO → Replace the throttle switch.

9. Carburetor switch

- Check the carburetor switch for continuity.
  Refer to "CHECKING THE SWITCHES".
- Is the carburetor switch OK?

YES → NO → Replace the carburetor switch.

EBS01040

10.Pickup coil resistance

- Disconnect the pickup coil coupler from the wire harness.
- Connect the pocket tester (Ω × 100) to the pickup coil terminal as shown.

Positive tester probe → white terminal ①
Negative tester probe → red terminal ②

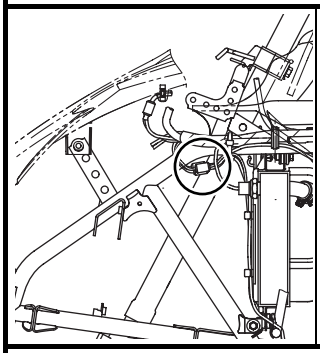

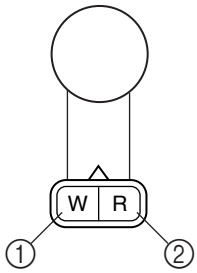

- Measure the pickup coil resistance.

Pickup coil resistance
248 ~ 372 Ω at 20 °C (68 °F)

- Is the pickup coil OK?

YES → Replace the pickup coil/stator assembly.

NO → Replace the pickup coil/stator assembly.

EBS01047

11.Wiring

- Check the entire ignition system's wiring. Refer to "CIRCUIT DIAGRAM".
- Is the ignition system's wiring properly connected and without defects?

YES → Replace the C.D.I. unit.

NO → Properly connect or repair the ignition system's wiring.

CHECKING THE THROTTLE OVERRIDE SYSTEM

WARNING

- **Make sure that the parking brake is applied.**
- **Make sure that the transmission is in neutral.**

NOTE:
Make sure that the throttle lever moves smoothly.

1. Remove:
   - throttle lever cover

2. Start the engine.

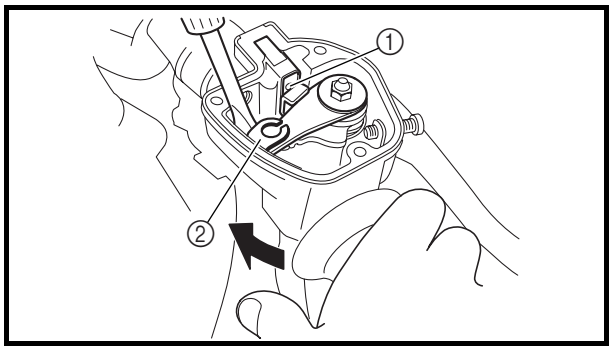

3. Check:
   - throttle switch ①

▼▼▼▼▼▼▼▼▼▼▼▼▼▼▼▼▼▼▼▼▼▼▼▼▼▼▼▼▼▼▼▼▼▼

a. Press the throttle lever so that the throttle lever arm ② does not contact the throttle switch, and then use a screwdriver to hold the throttle lever arm away from the switch.
b. Release the throttle lever so that the throttle switch is pushed and check that the throttle override system operates and the engine stops.

Engine stops → Throttle switch is O.K.
Engine does not stop → Check the electrical circuit. Refer to “IGNITION SYSTEM”.

▲▲▲▲▲▲▲▲▲▲▲▲▲▲▲▲▲▲▲▲▲▲▲▲▲▲▲▲▲▲▲▲▲▲

4. Install:
   - throttle lever cover

EBS00506

ELECTRIC STARTING SYSTEM

CIRCUIT DIAGRAM

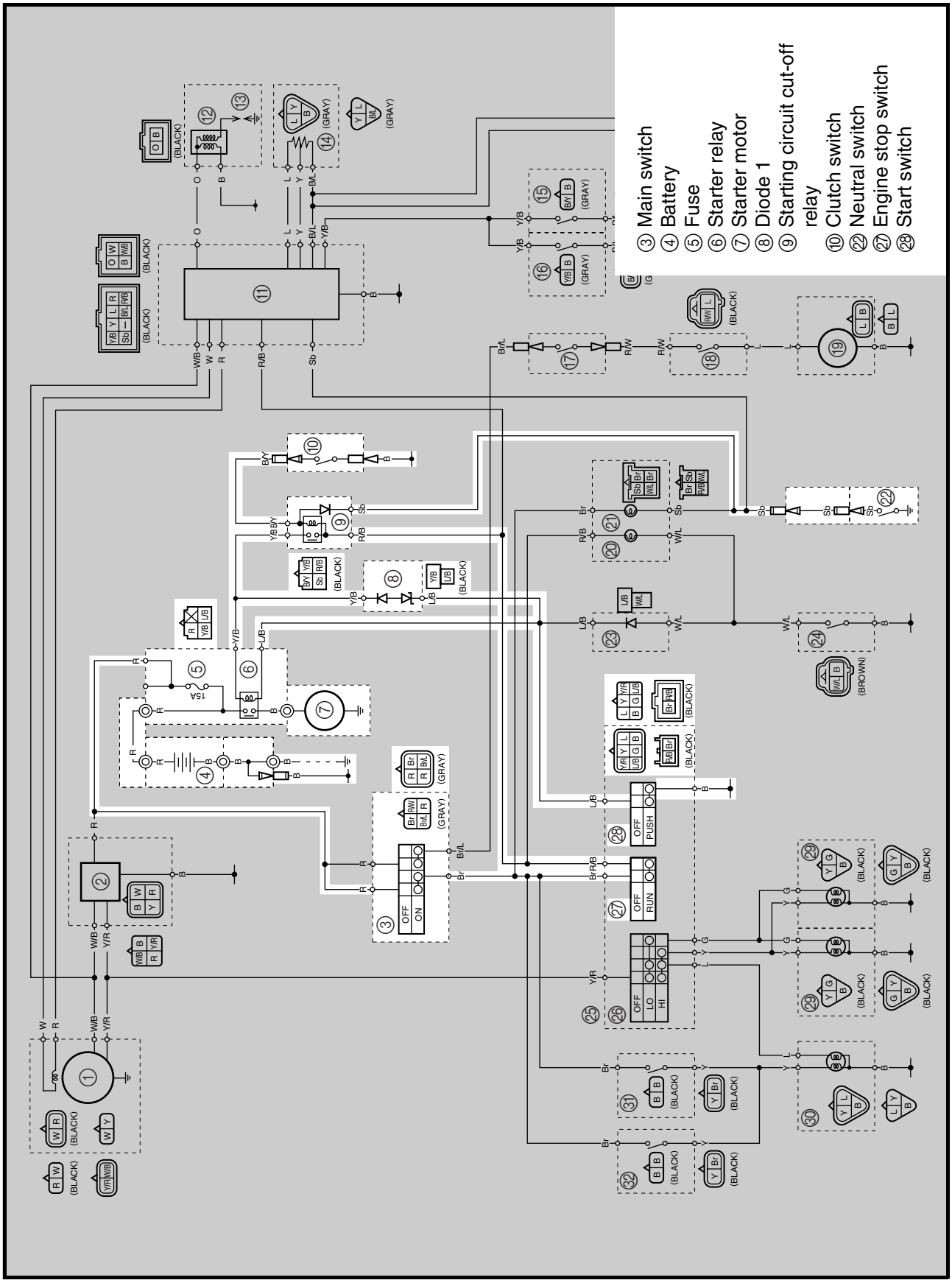

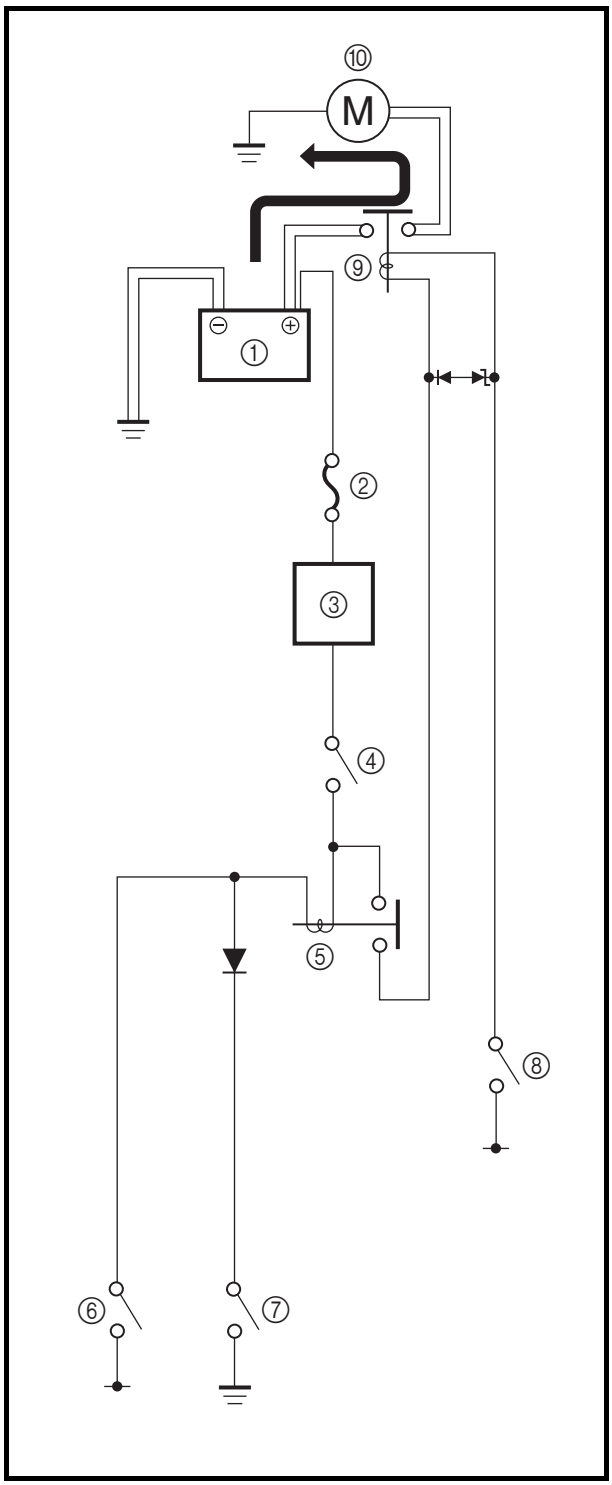

EBS00508

STARTING CIRCUIT CUT-OFF SYSTEM OPERATION

The starting circuit on this model consists of the starter motor, starter relay, clutch switch, and neutral switch. If the main switch is on and the engine stop switch is in the RUN position, the starter motor can be operated only if:

- The transmission is in neutral (the neutral switch is closed)

or

- You pull in the clutch lever (the clutch switch is closed).

① Battery
② Fuse
③ Main switch
④ Engine stop switch
⑤ Starting circuit cutoff relay
⑥ Clutch switch
⑦ Neutral switch
⑧ Start switch
⑨ Starter relay
⑩ Starter motor

EBS01050

TROUBLESHOOTING

The starter motor fails to turn.

Check:
1. fuse
2. battery
3. starter motor
4. starting circuit cut-off relay
5. starting circuit cut-off relay (diode)
6. starter relay
7. main switch
8. engine stop switch
9. neutral switch
10. clutch switch
11. start switch
12. wiring connections
    (of the entire starting system)

NOTE:
- Before troubleshooting, remove the following part(s):
1. seat
2. fuel tank cover
3. side covers (left and right)
4. front fender
- Troubleshoot with the following special tool(s).

Pocket tester
P/N. YU-03112-C, 90890-03112

EBS01043

1. Fuse
- Check the fuse for continuity.
  Refer to "CHECKING THE SWITCHES".
- Is the fuse OK?

YES → NO → Replace the fuse.

EBS01044

2. Battery
- Check the condition of the battery.
  Refer to "CHECKING AND CHARGING THE BATTERY" in chapter 3.

Minimum open-circuit voltage
12.8 V or more at 20 °C (68 °F)

- Is the battery OK?

YES → NO →
- Clean the battery terminals.
- Recharge or replace the battery.

EBS01051

3. Starter motor
- Connect the positive battery terminal ① and starter motor lead ② with a jumper lead ③.

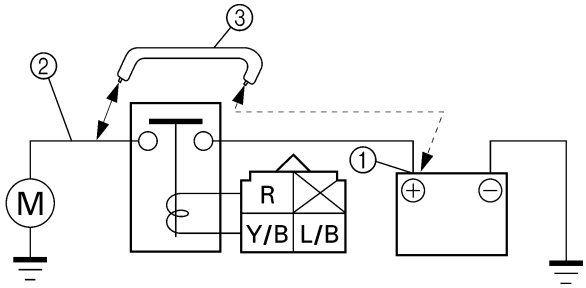

WARNING
- **A wire that is used as a jumper lead must have at least the same capacity or more as that of the battery lead, otherwise the jumper lead may burn.**
- **This check is likely to produce sparks, therefore make sure nothing flammable is in the vicinity.**

- Does the starter motor turn?

YES → NO → Repair or replace the starter motor.

EBS01052

4. Starting circuit cut-off relay

- Remove the starting circuit cut-off relay from the wire harness.
- Connect the pocket tester (Ω × 1) and battery (12 V) to the starting circuit cut-off relay as shown.

Positive battery terminal → red/black ①
Negative battery terminal → sky blue ② or black/yellow ③

Positive tester probe → red/black ①
Negative tester probe → yellow/black ④

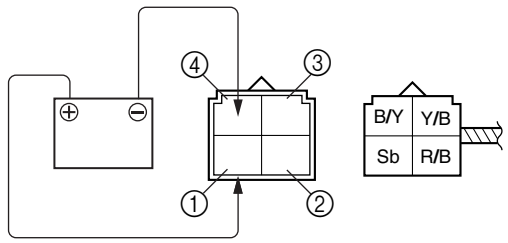

- Does the starting circuit cut-off relay have continuity between red/black and yellow/black?

YES

NO

Replace the starting circuit cut-off relay.

EBS01053

5. Starting circuit cut-off relay (diode)

- Remove the starting circuit cut-off relay from the wire harness.
- Connect the pocket tester (Ω × 1) to the starting circuit cut-off relay as shown.
- Measure the starting circuit cut-off relay for continuity as follows.

Positive tester probe → sky blue ① **Negative tester probe → red/black ②**	**Continuity**
Positive tester probe → red/black ② **Negative tester probe → sky blue ①**	**No continuity**

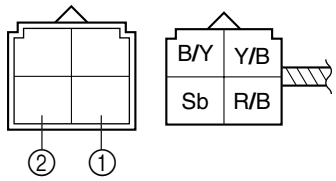

NOTE:
When you switch the tester's positive and negative probes, the readings in the above chart will be reversed.

- Are the testing readings correct?

YES

NO

Replace the starting circuit cut-off relay.

EBS01054

6. Starter relay

- Disconnect the starter relay coupler from the wire harness.
- Connect the pocket tester (Ω × 1) and battery (12 V) to the starter relay as shown.

Positive battery terminal → blue/black ①
Negative battery terminal → yellow/black ②

Positive tester probe → red ③
Negative tester probe → black ④

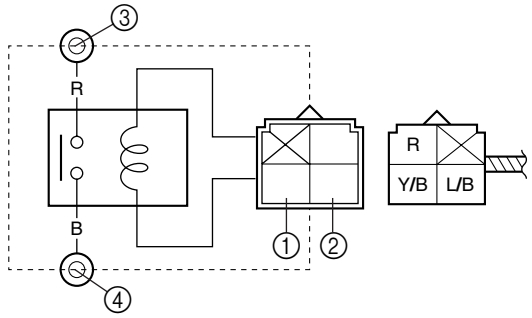

- Does the starter relay have continuity between red and black?

YES → NO → Replace the starter relay.

EBS01041

7. Main switch

- Check the main switch for continuity.
  Refer to "CHECKING THE SWITCHES".
- Is the main switch OK?

YES → NO → Replace the main switch.

EBS01042

8. Engine stop switch

- Check the engine stop switch for continuity.
  Refer to "CHECKING THE SWITCHES".
- Is the engine stop switch OK?

YES → NO → Replace the handlebar switch.

EBS01046

9. Neutral switch

- Check the neutral switch for continuity.
  Refer to "CHECKING THE SWITCHES".
- Is the neutral switch OK?

YES → NO → Replace the neutral switch.

EBS01056

10. Clutch switch

- Check the clutch switch for continuity.
  Refer to "CHECKING THE SWITCHES".
- Is the clutch switch OK?

YES → NO → Replace the clutch switch.

EBS01057

11. Start switch

- Check the start switch for continuity.
  Refer to "CHECKING THE SWITCHES".
- Is the start switch OK?

YES → NO → Replace the handlebar switch.

EBS01059

12.Wiring
• Check the entire starting system's wiring. Refer to "CIRCUIT DIAGRAM". • Is the starting system's wiring properly connected and without defects?

YES → The starting system circuit is OK.

NO → Properly connect or repair the starting system's wiring.

EBS01061
STARTER MOTOR

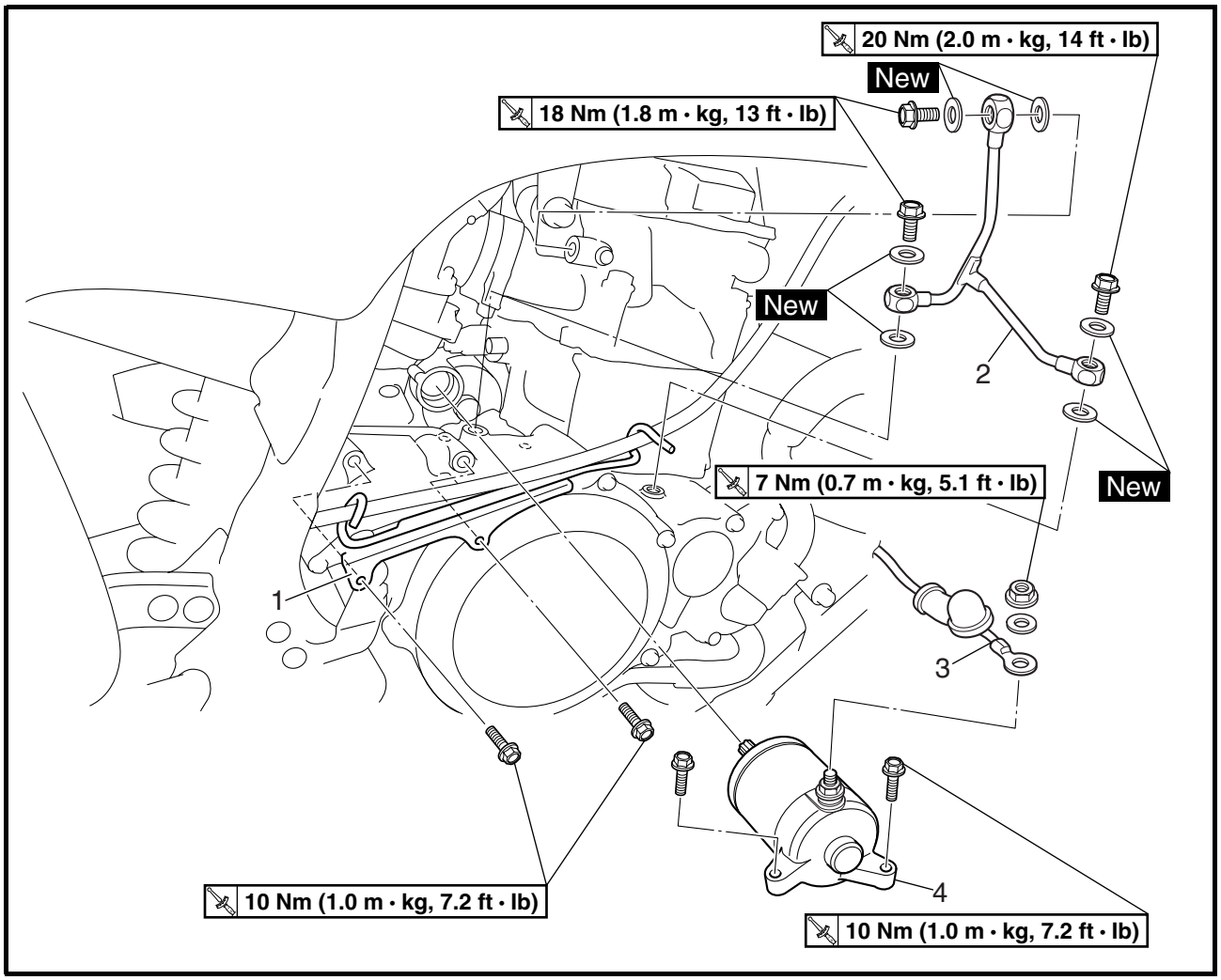

Order	Job/Part	Q'ty	Remarks
	Removing the starter motor		Remove the parts in the order listed.
	Exhaust pipe		Refer to "ENGINE REMOVAL" in chapter 4.
1	Parking brake cable holder	1	
2	Oil delivery pipe 1	1	
3	Starter motor lead	1	Disconnect.
4	Starter motor	1	
			For installation, reverse the removal procedure.

EBS01062

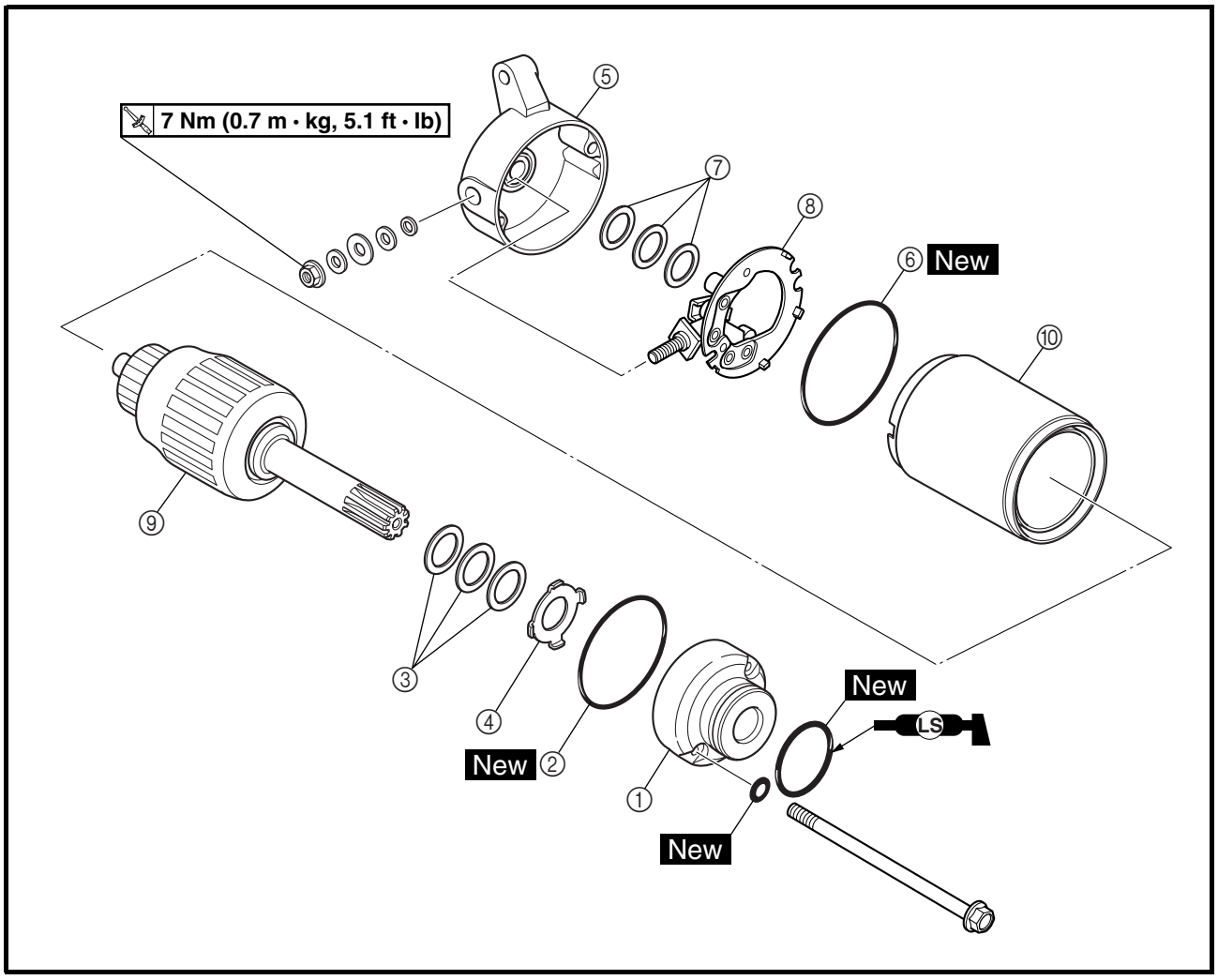

Order	Job/Part	Q'ty	Remarks
	Disassembling the starter motor		Remove the parts in the order listed.
①	Front bracket	1	Refer to "ASSEMBLING THE STARTER MOTOR".
②	O-ring	1	
③	Shim	1	
④	Lock washer	1	
⑤	Rear bracket	1	
⑥	O-ring	1	
⑦	Shim	1	
⑧	Brush holder assembly	1	
⑨	Armature assembly	1	
⑩	Starter motor yoke	1	
			For assembly, reverse the disassembly procedure.

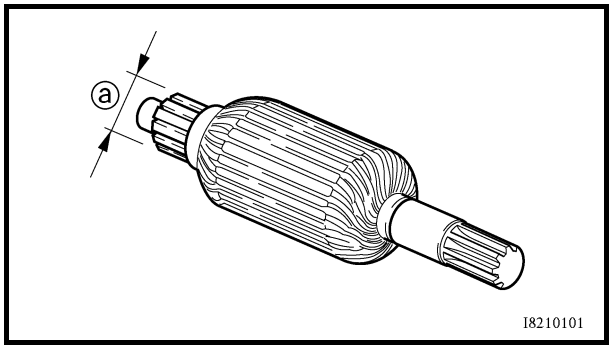

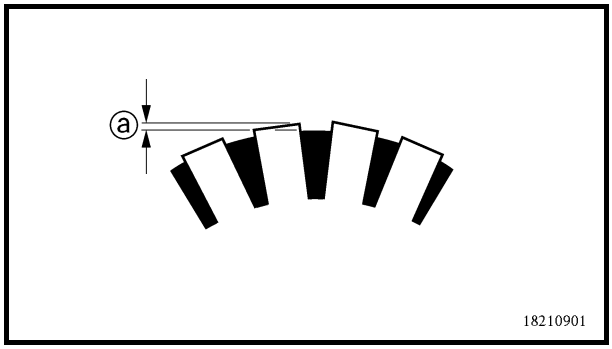

EBS01064

CHECKING THE STARTER MOTOR

1. Check:
   - commutator
     Dirt → Clean with 600-grit sandpaper.
2. Measure:
   - commutator diameter ⓐ
     Out of specification → Replace the starter motor.

Commutator wear limit
27 mm (1.06 in)

3. Measure:
   - mica undercut ⓐ
     Out of specification → Scrape the mica to the proper measurement with a hacksaw blade that has been grounded to fit the commutator.

Mica undercut
0.7 mm (0.03 in)

NOTE:
The mica of the commutator must be undercut to ensure proper operation of the commutator.

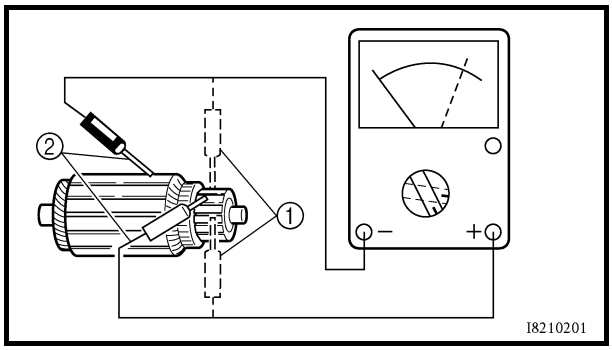

4. Measure:
   - armature assembly resistances (commutator and insulation)
     Out of specification → Replace the starter motor.

▼▼▼▼▼▼▼▼▼▼▼▼▼▼▼▼▼▼▼▼▼▼▼▼▼▼▼▼▼▼▼▼▼▼

a. Measure the armature assembly resistances with the pocket tester.

Pocket tester
P/N. YU-03112-C, 90890-03112

Armature coil
Commutator resistance ①
0.004 ~ 0.005 Ω at 20 °C (68 °F)
Insulation resistance ②
Above 1 MΩ at 20 °C (68 °F)

b. If any resistance is out of specification, replace the starter motor.

▲▲▲▲▲▲▲▲▲▲▲▲▲▲▲▲▲▲▲▲▲▲▲▲▲▲▲▲▲▲▲▲▲▲

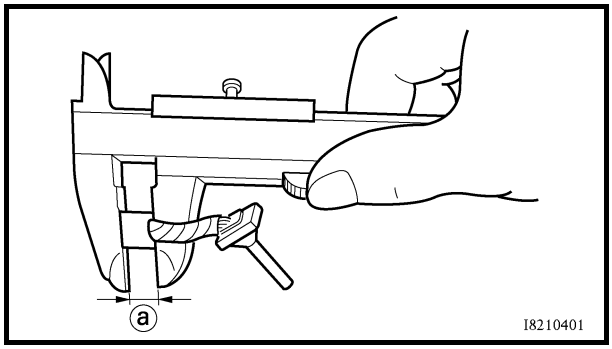

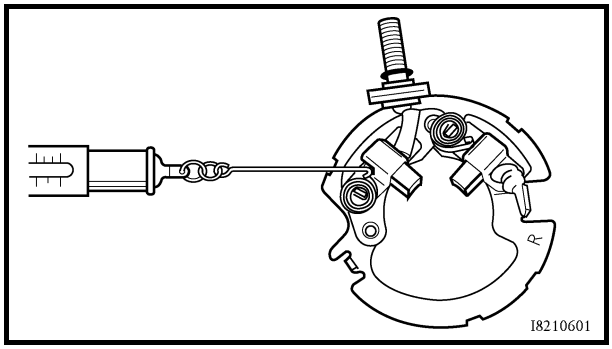

5. Measure:
   - brush length ⓐ
     Out of specification → Replace the brushes as a set.

	Brush length wear limit **3.5 mm (0.14 in)**

6. Measure:
   - brush spring force
     Out of specification → Replace the brush springs as a set.

	Brush spring force **7.16 ~ 9.52 N** **(730 ~ 971 gf, 25.77 ~ 34.27 oz)**

7. Check:
   - gear teeth
     Damage/wear → Replace the gear.
8. Check:
   - bushing
   - bearing
   - oil seal
     Damage/wear → Replace the defective part(s).

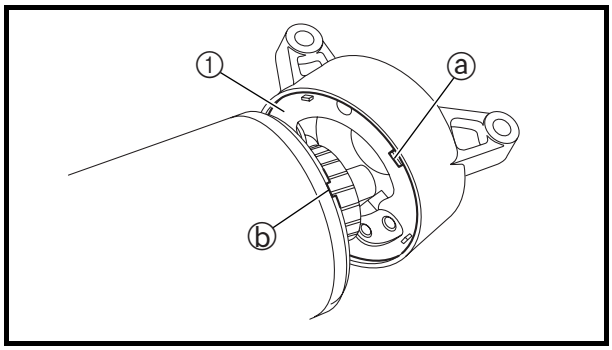

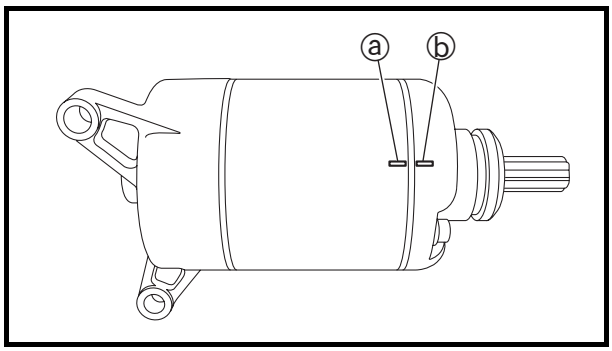

EBS00515

ASSEMBLING THE STARTER MOTOR

1. Install:
   - brush seat ①

NOTE:
Align the projection ⓐ on the rear bracket with the slot ⓑ in the yoke.

2. Install:
   - yoke
   - bracket

NOTE:
Align the match mark ⓐ on the yoke with the match mark ⓑ on the front bracket.

EBS00516

CHARGING SYSTEM

CIRCUIT DIAGRAM

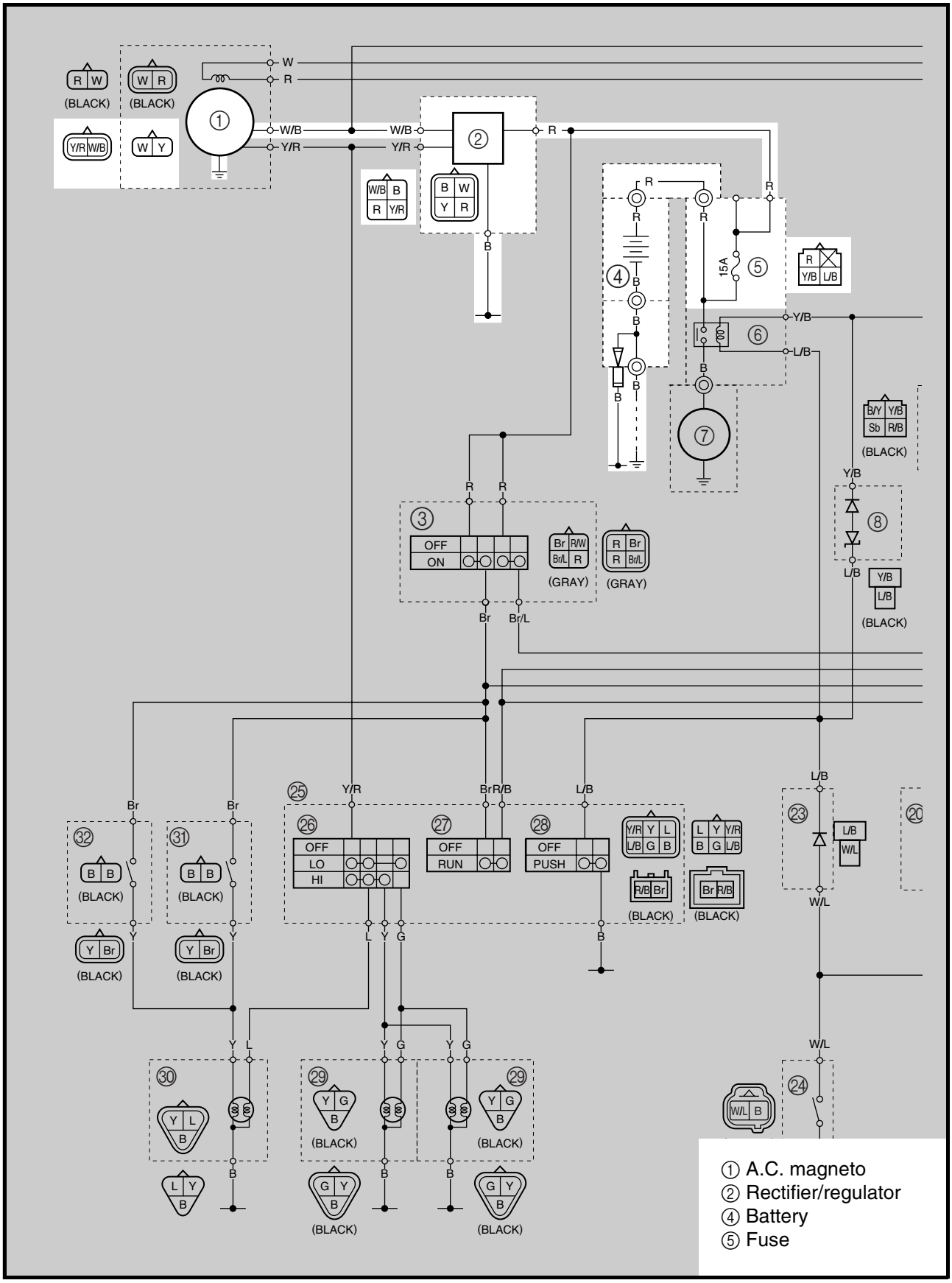

EBS01065

TROUBLESHOOTING

The battery is not being charged.

Check:
1. fuse
2. battery
3. charging voltage
4. charging coil resistance
5. wiring connections
   (of the entire charging system)

NOTE:
- Before troubleshooting, remove the following part(s):
1. seat
2. front tank cover
3. side covers (left and right)
4. front fender
- Troubleshoot with the following special tool(s).

Pocket tester
P/N. YU-03112-C, 90890-03112

EBS01043

1. Fuse
- Check the fuse for continuity.
  Refer to “CHECKING THE SWITCHES”.
- Is the fuse OK?

YES → NO → Replace the fuse.

EBS01044

2. Battery
- Check the condition of the battery.
  Refer to “CHECKING AND CHARGING THE BATTERY” in chapter 3.

Minimum open-circuit voltage
12.8 V or more at 20 °C (68 °F)

- Is the battery OK?

YES → NO →
- Clean the battery terminals.
- Recharge or replace the battery.

EBS01066

3. Charging voltage

- Connect the engine tachometer to on to the ignition coil.
- Connect the pocket tester (DC 20 V) to the battery as shown.

Positive tester probe →
positive battery terminal ①
Negative tester probe →
negative battery terminal ②

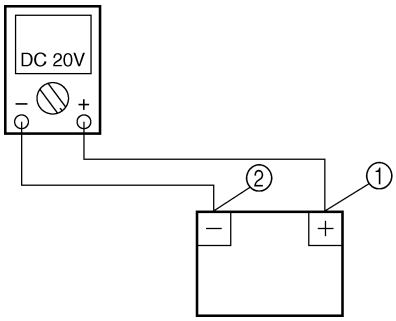

- Start the engine and let it run at approximately 5,000 r/min.
- Measure the charging voltage.

Charging voltage
14 V at 5,000 r/min

NOTE:
Make sure the battery is fully charged.

- Is the charging voltage within specification?

NO → The charging circuit is OK.

YES ↓

EBS01100

4. Charging coil resistance

- Disconnect the A.C. magneto coupler from the wire harness.
- Connect the pocket tester (Ω × 1) to the charging coils.

Positive tester probe → white ①
Negative tester probe → ground ②

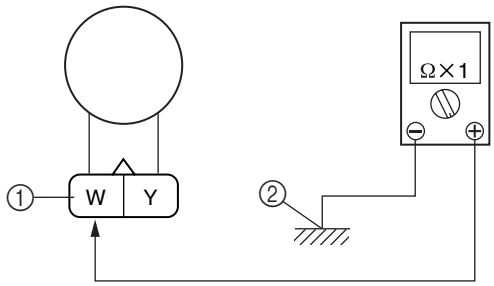

- Measure the charging coil resistance.

Charging coil resistance
0.288 ~ 0.432 Ω at 20 °C (68 °F)

YES ↓

NO → Replace the pickup coil/stator assembly.

5. Wiring

- Check the entire charging system's wiring. Refer to "CIRCUIT DIAGRAM".
- Is the charging system's wiring properly connected and without defects?

YES → Replace the rectifier/regulator.

NO → Replace the diode and properly connect or repair the charging system's wiring.

EBS00518

LIGHTING SYSTEM

CIRCUIT DIAGRAM

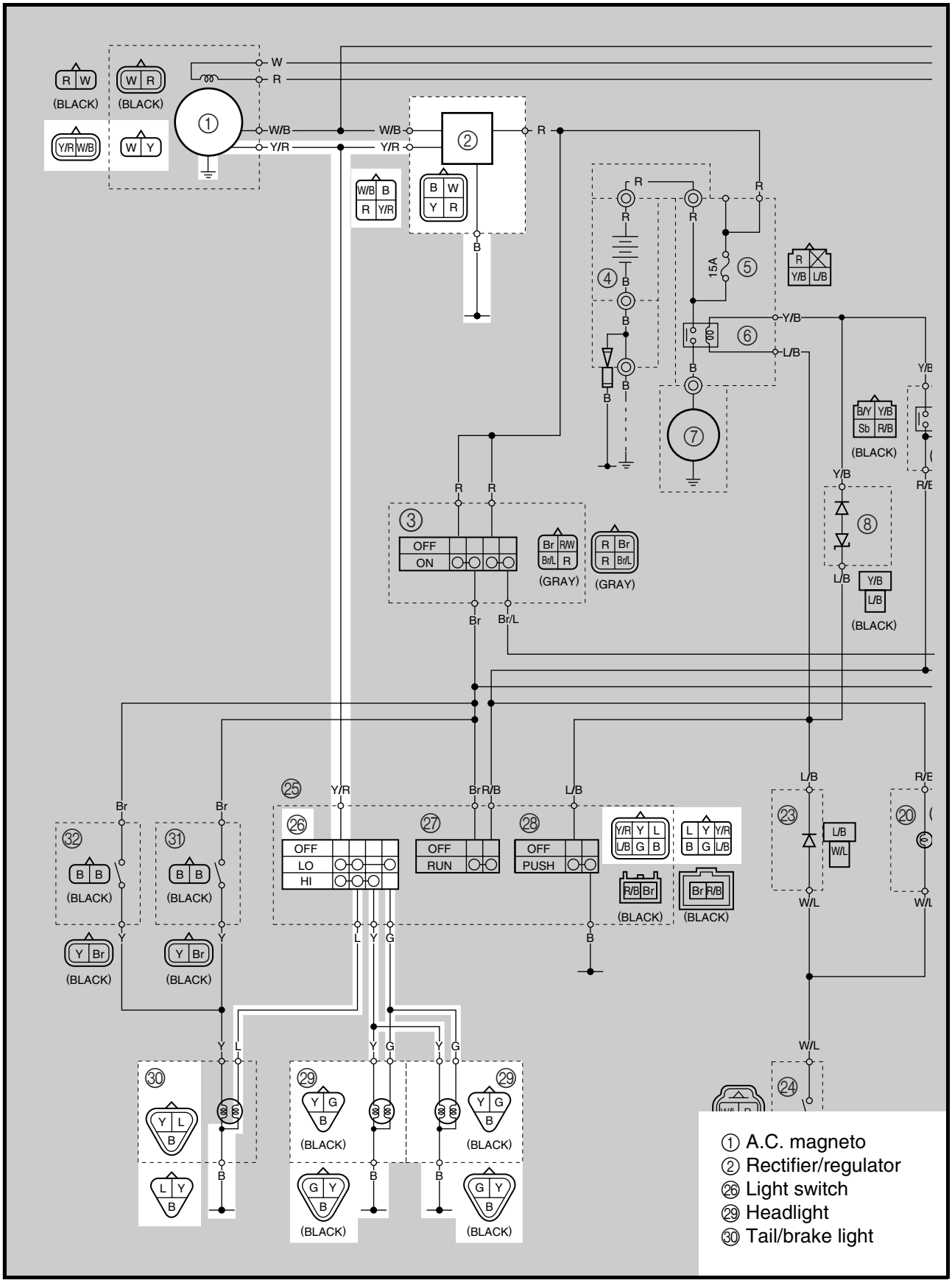

EBS01067
TROUBLESHOOTING

Any of the following fail to light: headlight, tail/brake light.

Check:
1. light switch
2. lighting coil resistance
3. wiring connections
   (of the entire lighting system)

NOTE:
- Before troubleshooting, remove the following part(s):
1. seat
2. fuel tank cover
3. side covers (left and right)
4. front fender
- Troubleshoot with the following special tool(s).

Pocket tester
P/N. YU-03112-C, 90890-03112

EAS00783

1. Light switch
- Check the light switch for continuity. Refer to “CHECKING THE SWITCHES”.
- Is the light switch OK?

YES → NO → Replace the handlebar switch.

EAS00776

2. Lighting coil resistance
- Disconnect the A.C. magneto coupler from the wire harness.
- Connect the pocket tester (Ω × 1) to the lighting coil terminals as shown.

Positive tester probe → yellow ①
Negative tester probe → ground ②

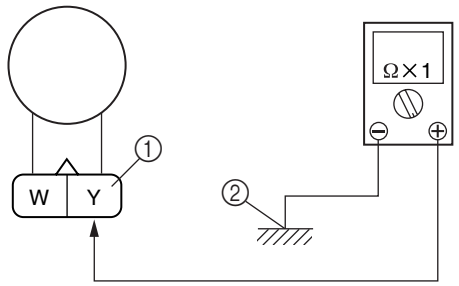

- Measure the lighting coil resistance.

Lighting coil resistance
0.224 ~ 0.336 Ω at 20 °C (68 °F)

- Is the lighting coil OK?

YES → NO → Replace the pickup coil/stator assembly.

EBS01069

3. Wiring
• Check the entire lighting system's wiring. Refer to "CIRCUIT DIAGRAM". • Is the lighting system's wiring properly connected and without defects?

YES → Check the condition of each of the lighting system's circuits. Refer to "CHECKING THE LIGHTING SYSTEM".

NO → Properly connect or repair the lighting system's wiring.

EBS01070

CHECKING THE LIGHTING SYSTEM

1. The headlights fail to come on.

1. Headlight bulb and socket
• Check the headlight bulb and socket for continuity. Refer to "CHECKING THE BULBS AND BULB SOCKETS". • Are the headlight bulb and socket OK?

YES

NO → Replace the headlight bulb, socket or both.

2. Voltage
• Connect the pocket tester (AC 20 V) to the headlight couplers as shown.
A When the light switch is set to "LO" B When the light switch is set to "HI"
Headlight coupler (wire harness side)
Headlight **Positive tester probe** → **yellow ① or green ②** **Negative tester probe** → **black ③**

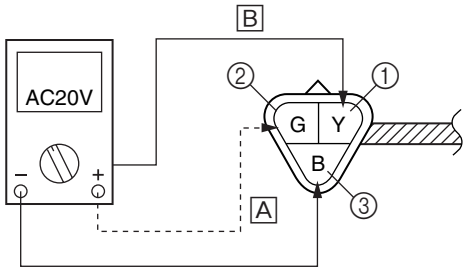

• Set the main switch to "ON". • Start the engine. • Set the light switch to "LO" or "HI". • Measure the voltage (AC 12 V) of yellow ① or green ② on the headlight coupler (wire harness side). • Is the voltage within specification?

YES → This circuit is OK.

NO → Replace the rectifier/regulator.

2. The tail/brake light fails to come on.

1. Tail/brake light bulb and socket
• Check the tail/brake light bulb and socket for continuity. Refer to “CHECKING THE BULBS AND BULB SOCKETS”. • Are the tail/brake light bulb and socket OK?

YES →

NO → Replace the tail/brake light bulb, socket or both.

2. Voltage
• Connect the pocket tester (AC 20 V) to the tail/brake light coupler as shown.
Tail/brake light coupler (wire harness side)
Tail/brake light **Positive tester probe → blue ①** **Negative tester probe → black ②**
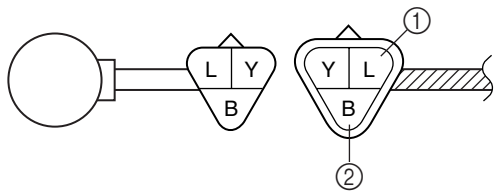
• Set the main switch to “ON”. • Start the engine. • Measure the voltage (AC 12 V) of blue ① on the tail/brake light coupler (wire harness side). • Is the voltage within specification?

YES → This circuit is OK.

NO → Replace the rectifier/regulator.

EBS00521

SIGNAL SYSTEM

CIRCUIT DIAGRAM

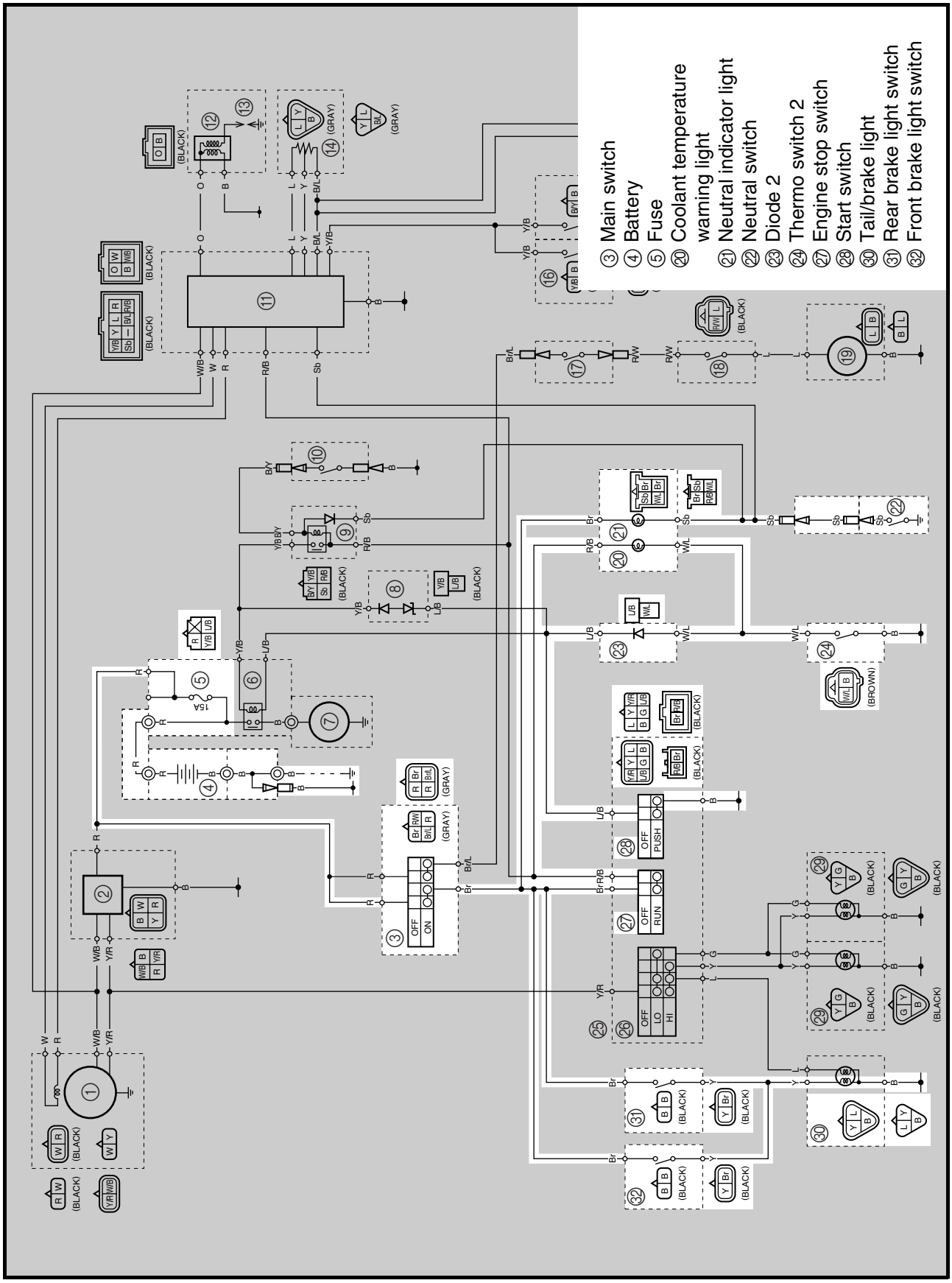

EBS01073

TROUBLESHOOTING

Any of the following fail to light: brake light or an indicator light.

Check:
1. fuse
2. battery
3. main switch
4. wiring connections
   (of the entire signaling system)

NOTE:
- Before troubleshooting, remove the following part(s):
1. seat
2. fuel tank cover
3. side covers (left and light)
4. front fender
- Troubleshoot with the following special tool(s).

Pocket tester
P/N. YU-03112-C, 90890-03112

EBS01043

1. Fuse
- Check the fuse for continuity.
  Refer to “CHECKING THE SWITCHES”.
- Is the fuse OK?

YES → NO → Replace the fuse.

EBS01044

2. Battery
- Check the condition of the battery.
  Refer to “CHECKING AND CHARGING THE BATTERY” in chapter 3.

Minimum open-circuit voltage
12.8 V or more at 20 °C (68 °F)

- Is the battery OK?

YES → NO →
- Clean the battery terminals.
- Recharge or replace the battery.

EBS01041

3. Main switch
- Check the main switch for continuity.
  Refer to “CHECKING THE SWITCHES”.
- Is the main switch OK?

YES → NO → Replace the main switch.

EBS01074

4. Wiring
- Check the entire signal system’s wiring.
  Refer to “CIRCUIT DIAGRAM”.
- Is the signaling system’s wiring properly connected and without defects?

YES → Check the condition of each of the signaling system’s circuits. Refer to “CHECKING THE SIGNALING SYSTEM”.

NO → Properly connect or repair the signaling system’s wiring.

EBS01075
CHECKING THE SIGNALING SYSTEM

EBS01076
1. The tail/brake light fails to come on.

1. Tail/brake light bulb and bulb socket

- Check the tail/brake light bulb and bulb socket for continuity.
  Refer to "CHECKING THE BULBS AND BULB SOCKETS".
- Are the tail/brake light bulb and bulb socket OK?

YES → NO → Replace the tail/brake light bulb, bulb socket or both.

2. Brake light switches

- Check the brake light switches for continuity.
  Refer to "CHECKING THE SWITCHES".
- Is the brake light switch OK?

YES → NO → Replace the brake light switch.

3. Voltage

- Connect the pocket tester (DC 20 V) to the tail/brake light coupler (wire harness side) as shown.

Positive tester probe → yellow ①
Negative tester probe → black ②

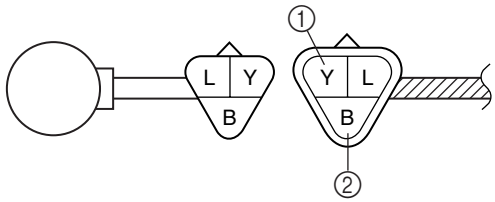

- Set the main switch to "ON".
- Pull in the brake lever or push down on the brake pedal.
- Measure the voltage (DC 12 V) of yellow ① on the tail/brake light coupler (wire harness side).
- Is the voltage within specification?

YES → This circuit is OK.

NO → The wiring circuit from the main switch to the tail/brake light coupler is faulty and must be repaired.

EBS01077
2. The neutral indicator light fails to come on.

1. Neutral indicator light bulb and socket

- Check the neutral indicator light bulb and socket for continuity.
  Refer to "CHECKING THE BULBS AND BULB SOCKETS".
- Are the neutral indicator light bulb and socket OK?

YES → NO → Replace the neutral indicator light bulb, socket or both.

2. Neutral switch

- Check the neutral switch for continuity. Refer to “CHECKING THE SWITCHES”.
- Is the neutral switch OK?

YES → NO → Replace the neutral switch.

3. Voltage

- Connect the pocket tester (DC 20 V) to the indicator light coupler (wire harness side) as shown.

Positive tester probe → brown ①
Negative tester probe → sky blue ②

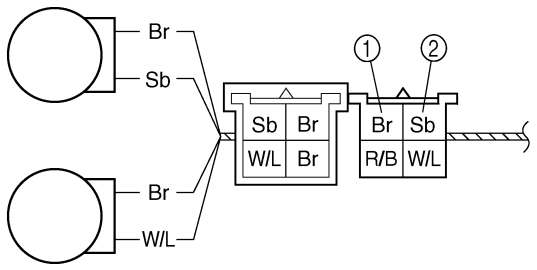

- Set the main switch to “ON”.
- Measure the voltage (DC 12 V).
- Is the voltage within specification?

YES → This circuit is OK.

NO → The wiring circuit from the main switch to the indicator light coupler is faulty and must be repaired.

EBS01083

3. The coolant temperature warning light does not come on when the start switch is pushed on, or if the coolant temperature warning light does not come on when the temperature is high (more than 117 ~ 123 °C (242.6 ~ 253.4 °F)).

1. Coolant temperature warning light bulb and socket

- Check the coolant temperature warning light bulb and socket for continuity. Refer to “CHECKING THE BULBS AND BULB SOCKETS”.
- Are the coolant temperature warning light bulb and socket OK?

YES → NO → Replace the coolant temperature warning light bulb, socket or both.

2. Thermo switch 2

- Remove the thermo switch 2 from the radiator.
- Connect the pocket tester (Ω × 1) to the thermo switch 2 ① as shown.
- Immerse the thermo switch 2 in a container filled with coolant ②.
- Place a thermometer ③ in the coolant.
- Slowly heat the coolant, then let it cool down to the specified temperature.
- Check the thermo switch 2 for continuity at the temperatures indicated below.

Test step	Coolant temperature / Thermo switch	Continuity
1	Less than 120 ± 3 °C (248 ± 5.4 °F)	NO
2	More than 120 ± 3 °C (248 ± 5.4 °F)	YES
3*	More than 115 ± 3 °C (239 ± 5.4 °F)	YES
4*	Less than 115 ± 3 °C (239 ± 5.4 °F)	NO

Steps 1 & 2: Heating phase
Steps 3* & 4*: Cooling phase

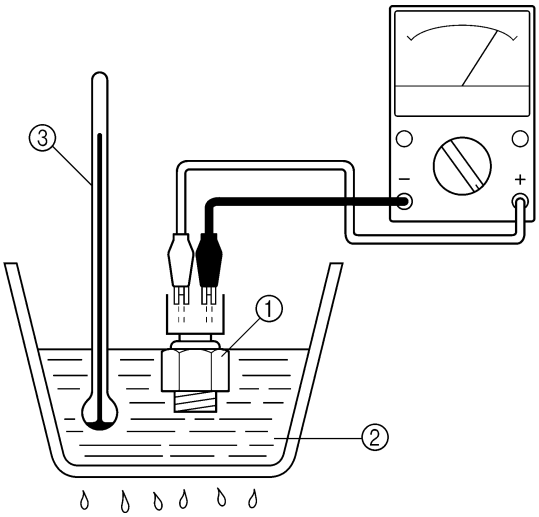

A The thermo switch circuit is open and the coolant temperature warning light is off.
B The thermo switch circuit is closed and the coolant temperature warning light is on.

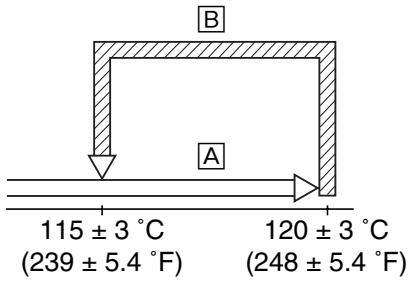

WARNING

- **Handle the thermo switch with special care.**
- **Never subject the thermo switch to strong shocks. If the thermo switch is dropped, replace it.**

Thermo switch
28 Nm (2.8 m · kg, 20 ft · lb)

- Does the thermo switch 2 operate properly as described above?

YES → NO

Replace the thermo switch 2.

3. Voltage

- Connect the pocket tester (DC 20 V) to the indicator light connector (wire harness side) as shown.

Positive tester probe → red/black ①
Negative tester probe → white/blue ②

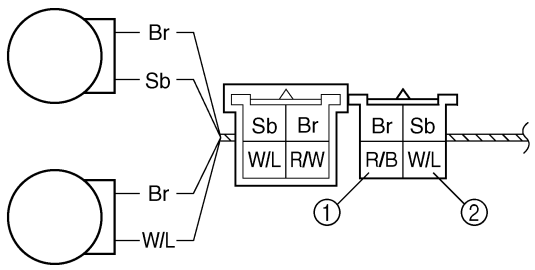

- Set the main switch to "ON".
- Measure the voltage (12 V) of red/black ① and brown ② at the indicator light coupler.
- Is the voltage within specification?

YES → NO

The wiring circuit from the main switch to the indicator light connector is faulty, repair it.

4. Diode

- Remove the diode from the coupler.
- Connect the pocket tester (Ω × 1) to the diode terminals as shown.
- Check the diode for continuity as follows.

Positive tester probe → blue/black ① **Negative tester probe → white/blue ②**	**Continuity**
Positive tester probe → white/blue ② **Negative tester probe → blue/black ①**	**No continuity**

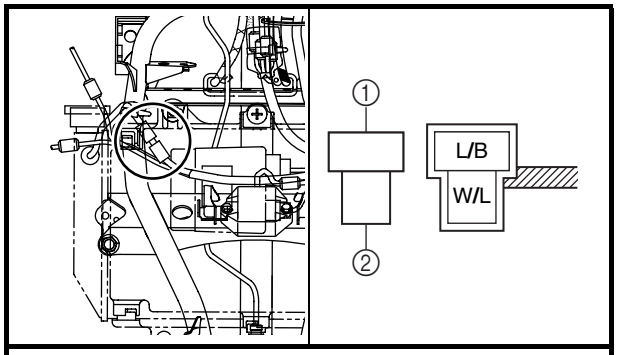

NOTE:
When you switch the tester's positive and negative probes, the readings in the above chart will be reversed.

- Is the diode OK?

YES → NO

Replace the diode.

5. Start switch

- Check the start switch for continuity. Refer to "CHECKING THE SWITCHES".
- Is the start switch OK?

YES → NO

The circuit is not faulty.

Replace the handle-bar switch.

EBS00532

COOLING SYSTEM

CIRCUIT DIAGRAM

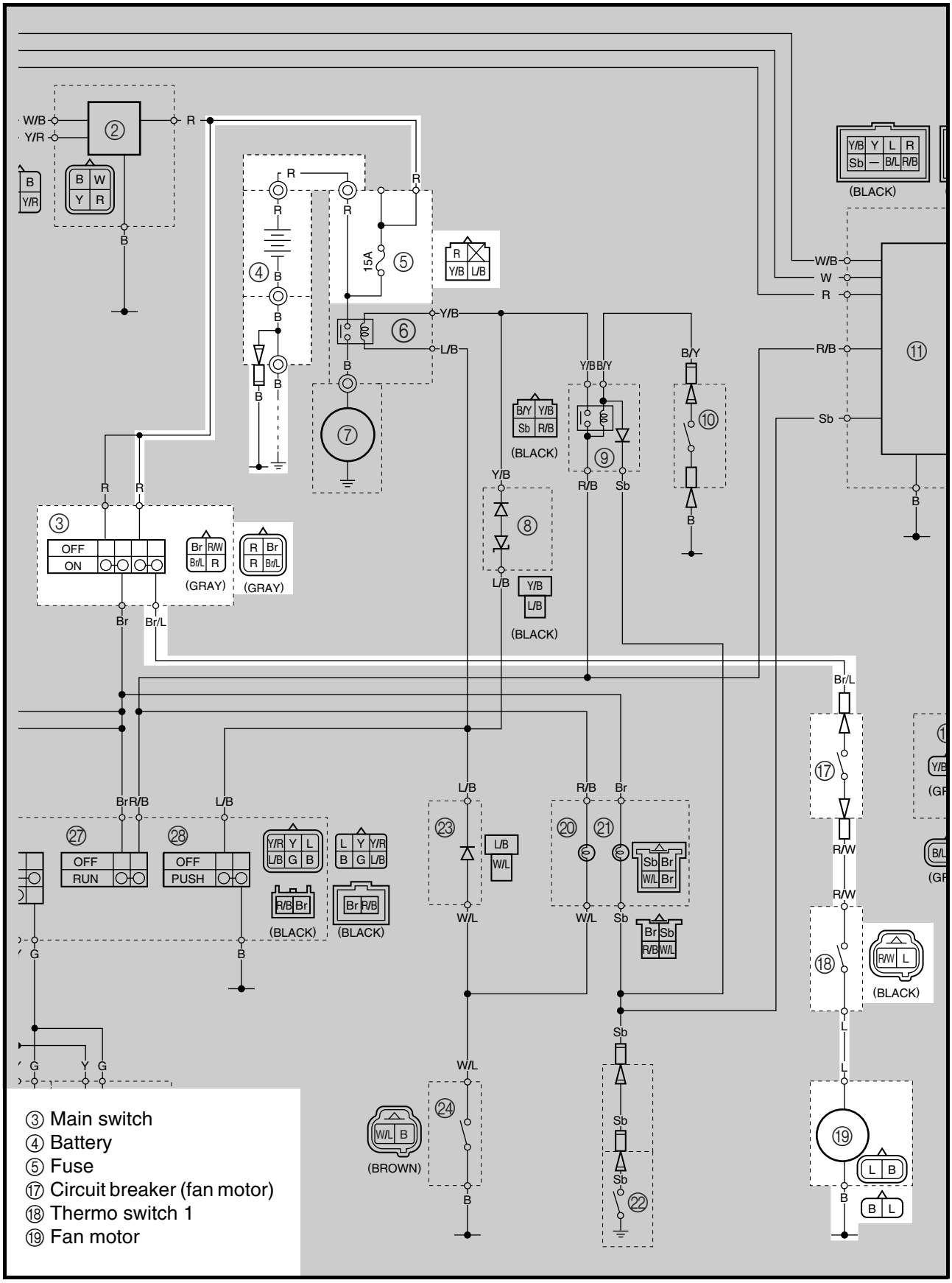

EBS01085

TROUBLESHOOTING

The radiator fan motor fails to turn.

Check:
1. fuse
2. battery
3. main switch
4. radiator fan motor
5. circuit breaker (fan motor)
6. thermo switch 1
7. wiring connections
   (the entire cooling system)

NOTE:
- Before troubleshooting, remove the following part(s):
1. seat
2. fuel tank cover
3. side covers (left and right)
4. front fender
- Troubleshoot with the following special tool(s).

Pocket tester
P/N. YU-03112-C, 90890-03112

EBS01043

1. Fuse
- Check the fuse for continuity.
  Refer to “CHECKING THE SWITCHES”.
- Are the fuse OK?

YES → NO → Replace the fuse.

EBS01044

2. Battery
- Check the condition of the battery.
  Refer to “CHECKING AND CHARGING THE BATTERY” in chapter 3.

Minimum open-circuit voltage
12.8 V or more at 20 °C (68 °F)

- Is the battery OK?

YES → NO →
- Clean the battery terminals.
- Recharge or replace the battery.

EBS01041

3. Main switch
- Check the main switch for continuity.
  Refer to “CHECKING THE SWITCHES”.
- Is the main switch OK?

YES → NO → Replace the main switch.

EBS01086

4. Radiator fan motor

- Disconnect the radiator fan motor coupler from the wire harness.
- Connect the battery (DC 12 V) as shown.

Positive battery lead → blue ①
Negative battery lead → black ②

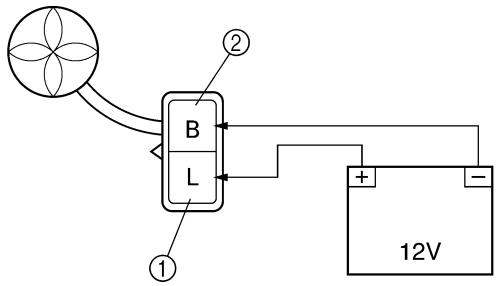

- Does the radiator fan motor turn?

YES → NO

The radiator fan motor is faulty and must be replaced.

5. Circuit breaker (fan motor)

- Remove the circuit breaker from the wire harness.
- Connect the pocket tester (Ω × 1) to the circuit breaker.

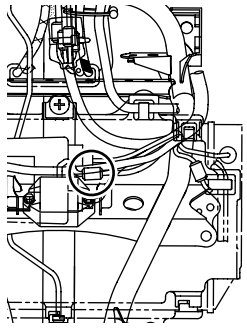

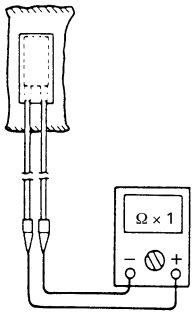

Circuit breaker resistance
Zero Ω at 20 °C (68 °F)

YES → NO

Replace the circuit breaker.

EBS01088

6. Thermo switch 1

- Remove the thermo switch 1 from the radiator.
- Connect the pocket tester (Ω × 1) to the thermo switch 1 ① as shown.
- Immerse the thermo switch 1 in a container filled with coolant ②.
- Place a thermometer ③ in the coolant.
- Slowly heat the coolant, then let it cool down to the specified temperature.
- Check the thermo switch 1 for continuity at the temperatures indicated below.

Test step	Coolant temperature Thermo switch	Continuity
1	Less than 98 ± 3°C (208.4 ± 5.4 °F)	NO
2	More than 98 ± 3 °C (208.4 ± 5.4 °F)	YES
3*	More than 92 ± 3 °C (197.6 ± 5.4 °F)	YES
4*	Less than 92 ± 3 °C. (197.6 ± 5.4 °F)	NO

Steps 1 & 2: Heating phase
Steps 3* & 4*: Cooling phase

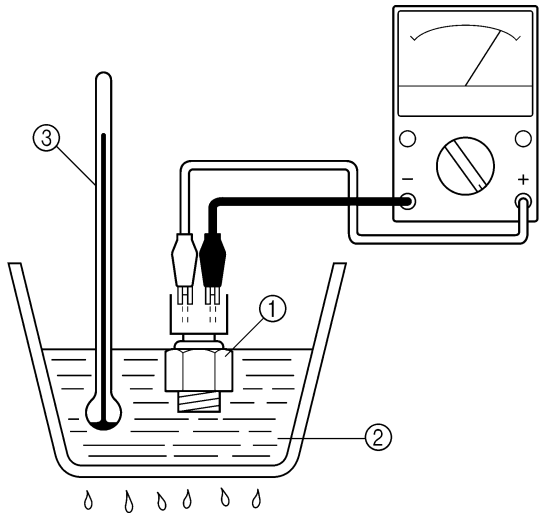

WARNING

- **Handle the thermo switch with special care.**
- **Never subject the thermo switch to strong shocks. If the thermo switch is dropped, replace it.**

Thermo switch
28 Nm (2.8 m · kg, 20 ft · lb)

A The thermo switch circuit is open and the radiator fan is off.
B The thermo switch circuit is closed and the radiator fan is on.

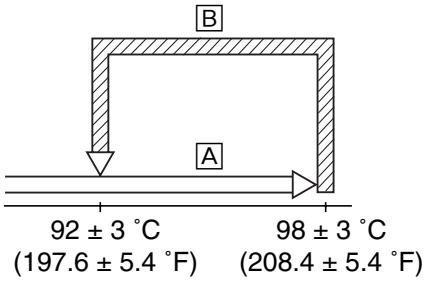

- Does the thermo switch 1 operate properly as described above?

YES → NO → Replace the thermo switch 1.

EBS01090

7. Wiring

- Check the entire cooling system's wiring. Refer to "CIRCUIT DIAGRAM".
- Is the cooling system's wiring properly connected and without defects?

YES → This circuit is OK.

NO → Properly connect or repair the cooling system's wiring.

?

TRBL
SHTG

9

CHAPTER 9
TROUBLESHOOTING

EBS00537

TROUBLESHOOTING

NOTE:
The following troubleshooting does not cover all the possible causes of trouble. It should be helpful, however, as a guide to troubleshooting. Refer to the relative procedure in this manual for check, adjustment and replacement of parts.

STARTING FAILURE/HARD STARTING

FUEL SYSTEM

Fuel tank
- Empty
- Clogged fuel strainer
- Clogged fuel tank breather hose
- Deteriorated or contaminated fuel

Fuel cock
- Clogged fuel hose

Carburetor
- Deteriorated or contaminated fuel
- Clogged pilot jet
- Clogged pilot air passage
- Sucked-in air
- Deformed float
- Worn needle valve
- Improperly sealed valve seat
- Improperly adjusted fuel level
- Improperly set pilot jet
- Clogged starter jet
- Choke valve malfunction

Air filter
- Clogged air filter element

ELECTRICAL SYSTEM

Spark plug
- Improper plug gap
- Worn electrodes
- Wire between terminals broken
- Improper heat range

Ignition coil
- Broken or shorted primary/secondary
- Faulty ignition coil lead
- Broken body

C.D.I. system
- Faulty C.D.I. unit
- Faulty pickup coil
- Faulty lighting coil
- Faulty charging coil
- Broken woodruff key

Switches and wiring
- Faulty main switch
- Faulty engine stop switch
- Broken or shorted wiring
- Faulty neutral switch
- Faulty start switch
- Faulty clutch switch
- Faulty throttle switch
- Faulty carburetor switch
- Loose connections

Starter motor
- Faulty starter motor
- Faulty starter relay
- Faulty starting circuit cut-off relay
- Faulty starter clutch
- Faulty torque limiter

Battery
- Faulty battery
- Discharged battery

COMPRESSION SYSTEM

Cylinder and cylinder head
- Loose spark plug
- Loose cylinder head or cylinder
- Broken cylinder head gasket
- Broken cylinder gasket
- Worn, damaged or seized cylinder

Valve and camshaft
- Improperly sealed valve
- Improperly contacted valve and valve seat
- Improper valve timing
- Broken valve spring
- Seized camshaft

Piston and piston rings
- Improperly installed piston ring
- Worn, fatigued or broken piston ring
- Seized piston ring
- Seized or damaged piston

Crankcase and crankshaft
- Improperly seated crankcase
- Seized crankshaft

Valve train
- Improperly adjusted valve clearance
- Improperly adjusted valve timing

EBS00538

POOR IDLE SPEED PERFORMANCE

POOR IDLE SPEED PERFORMANCE

Carburetor
- Improperly returned choke
- Loose or clogged pilot jet
- Loose or clogged pilot air jet
- Improperly adjusted idle speed (throttle stop screw)
- Improper throttle cable play
- Flooded carburetor

Intake manifold
- Loosen carburetor joint

Electrical system
- Faulty battery
- Faulty C.D.I. unit
- Faulty pickup coil
- Faulty ignition coil

Valve train
- Improperly adjusted valve clearance

Air filter
- Clogged air filter element
- Loosen air filter joint

EBS00539

POOR MEDIUM AND HIGH-SPEED PERFORMANCE

POOR MEDIUM AND HIGH-SPEED PERFORMANCE

Refer to “STARTING FAILURE/HARD STARTING” and “POOR IDLE SPEED PERFORMANCE—Valve train”.

Carburetor
- Improper jet needle clip position
- Improperly adjusted fuel level
- Clogged or loose main jet
- Deteriorated or contaminated fuel

Air filter
- Clogged air filter element

EBS00541

FAULTY GEAR SHIFTING

HARD SHIFTING

Refer to “CLUTCH DRAGGING”.

SHIFT PEDAL DOES NOT MOVE

Shift shaft
- Bent shift shaft

Shift drum and shift forks
- Groove jammed with impurities
- Seized shift fork
- Bent shift fork guide bar

Transmission
- Seized transmission gear
- Jammed impurities
- Incorrectly assembled transmission

Shift guide
- Broken shift guide

JUMPS OUT GEAR

Shift shaft
- Improperly adjusted shift lever position
- Improperly returned stopper lever

Shift forks
- Worn shift fork

Shift drum
- Improper thrust play
- Worn shift drum groove

Transmission
- Worn gear dog

EBS00545

CLUTCH SLIPPING/DRAGGING

CLUTCH SLIPPING

Clutch
- Loose clutch spring
- Fatigued clutch spring
- Worn friction plate
- Worn clutch plate
- Incorrectly assembled clutch

Engine oil
- Low oil level
- Improper quality (low viscosity)
- Deterioration

CLUTCH DRAGGING

Clutch
- Warped pressure plate
- Unevenly tensioned clutch springs
- Loose clutch boss nut
- Burnt primary driven gear bushing
- Bent clutch plate
- Swollen friction plate
- Broken clutch boss

Engine oil
- High oil level
- Improper quality (high viscosity)
- Deterioration

EBS00547

OVERHEATING

OVERHEATING

Ignition system
- Improper spark plug gap
- Improper spark plug heat range
- Faulty C.D.I. unit

Fuel system
- Improper carburetor main jet (improper setting)
- Improper fuel level
- Clogged air filter element

Compression system
- Heavy carbon deposit

Engine oil
- Improper oil level
- Improper oil viscosity
- Inferior oil quality

Brake
- Brake drag

Cooling system
- Low coolant level
- Clogged or damaged radiator
- Damaged or faulty water pump
- Faulty fan motor
- Faulty thermo switch

EBS00550

FAULTY BRAKE

POOR BRAKING EFFECT

Disc brake
- Worn brake pads
- Worn disc
- Air in brake fluid
- Leaking brake fluid
- Faulty master cylinder kit cup
- Faulty caliper kit seal
- Loose union bolt
- Broken brake hose and pipe
- Oily or greasy disc/brake pads
- Improper brake fluid level

EBS00551

SHOCK ABSORBER MALFUNCTION

MALFUNCTION

- Bent or damaged damper rod
- Damaged oil seal lip
- Fatigued shock absorber spring
- Leaking oil or gas

EBS00552

UNSTABLE HANDLING

UNSTABLE HANDLING

Handlebar
- Improperly installed or bent

Steering
- Incorrect toe-in
- Bent steering stem
- Improperly installed steering stem
- Damaged bearing or bearing race
- Bent tie-rods
- Deformed steering knuckles

Tires
- Uneven tire pressures on both sides
- Incorrect tire pressure
- Uneven tire wear

Wheels
- Deformed wheel
- Loose bearing
- Bent or loose wheel axle
- Excessive wheel runout

Frame
- Bent
- Damaged frame

Swingarm
- Worn bearing or bushing
- Bent or damaged

EBS00553

LIGHTING SYSTEM

HEADLIGHT DOES NOT COME ON
- Improper bulb
- Too many electric accessories
- Hard charging (broken stator coil and/or faulty rectifier/regulator)
- Incorrect connection
- Improperly grounded
- Poor contacts (main or light switch)
- Bulb life expired

TAIL/BRAKE LIGHT DOES NOT LIGHT
- Wrong tail/brake light bulb
- Too many electrical accessories
- Hard charging (broken stator coil and/or faulty rectifier/regulator)
- Incorrect connection
- Improperly grounded
- Poor contacts (main or light switch)
- Burnt-out tail/brake light bulb

BULB BURNT OUT
- Improper bulb
- Faulty battery
- Faulty rectifier/regulator
- Improperly grounded
- Faulty main and/or light switch
- Bulb life expired

TAIL/BRAKE LIGHT BULB BURNT OUT
- Wrong tail/brake light bulb
- Faulty battery
- Faulty rectifier/regulator
- Improperly grounded
- Faulty main and/or light switch
- Incorrectly adjusted rear brake light switch
- Tail/brake light bulb life expired

YAMAHA

YAMAHA MOTOR CO., LTD.
2500 SHINGAI IWATA SHIZUOKA JAPAN

YFZ450S WIRING DIAGRAM

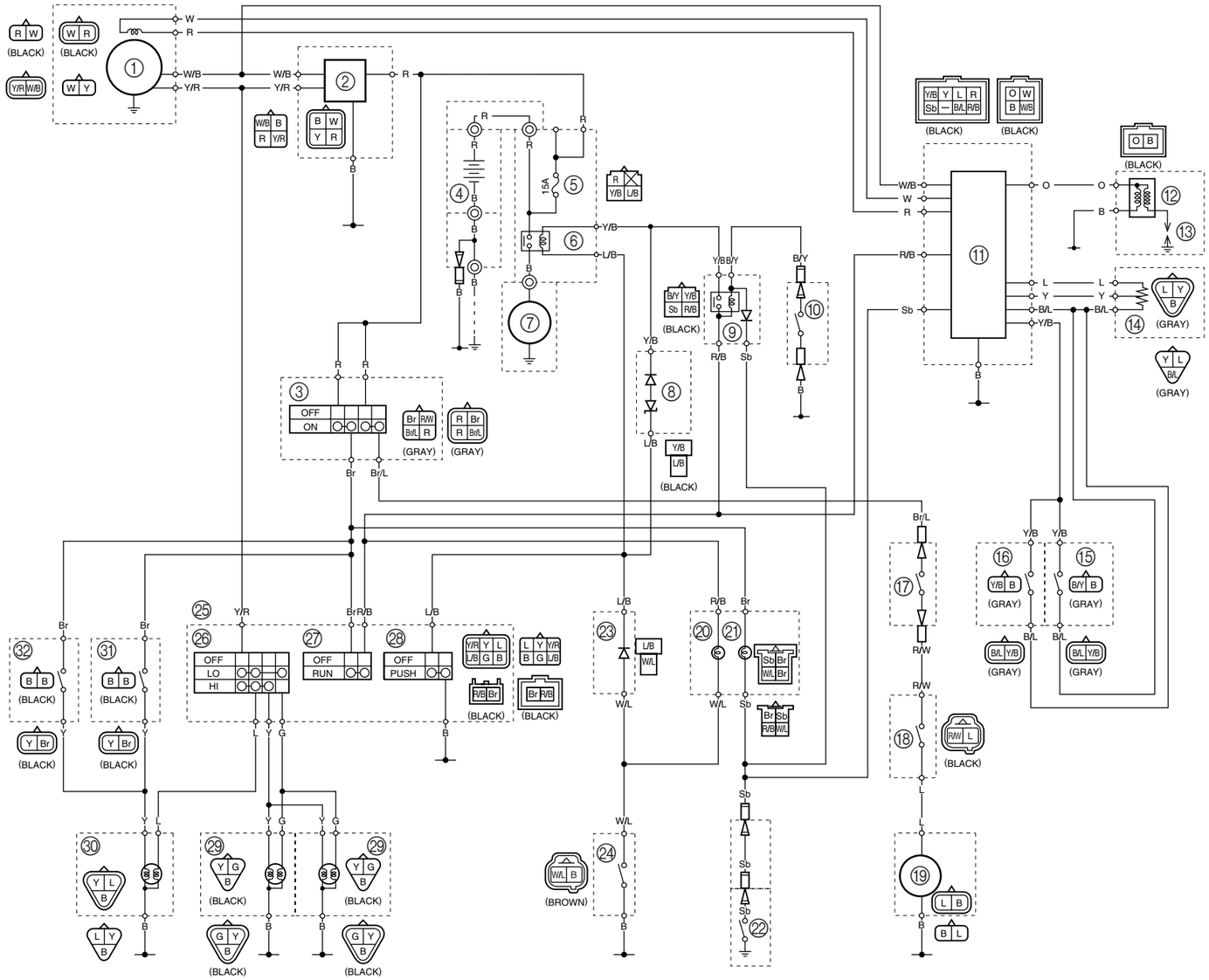

① A.C. magneto
② Rectifier/regulator
③ Main switch
④ Battery
⑤ Fuse
⑥ Starter relay
⑦ Starter motor
⑧ Diode 1
⑨ Starting circuit cut-off relay
⑩ Clutch switch
⑪ C.D.I. unit
⑫ Ignition coil
⑬ Spark plug
⑭ Throttle position sensor
⑮ Throttle switch
⑯ Carburetor switch
⑰ Circuit breaker (fan motor)
⑱ Thermo switch 1
⑲ Fan motor
⑳ Coolant temperature warning light
㉑ Neutral indicator light
㉒ Neutral switch
㉓ Diode 2
㉔ Thermo switch 2
㉕ Handlebar switch
㉖ Light switch
㉗ Engine stop switch
㉘ Start switch
㉙ Headlight
㉚ Tail/brake light
㉛ Rear brake light switch
㉜ Front brake light switch

COLOR CODE

B	Black	Y	Yellow	W/L	White/Blue
Br	Brown	B/L	Black/Blue	Y/B	Yellow/Black
G	Green	B/Y	Black/Yellow	Y/R	Yellow/Red
L	Blue	Br/L	Brown/Blue		
O	Orange	L/B	Blue/Black		
R	Red	R/B	Red/Black		
Sb	Sky blue	R/W	Red/White		
W	White	W/B	White/Black		