YAMAHA 2002

YFM660R(P)

5LP2-AE2

SUPPLEMENTARY SERVICE MANUAL

FOREWORD

This Supplementary Service Manual has been prepared to introduce new service and new data for the YFM660R(P) 2002. For complete information on service procedures, it is necessary to use this Supplementary Service Manual together with the following manual.

YFM660R(N) 2001 SERVICE MANUAL: 5LP2-AE1

YFM660R(P) 2002
SUPPLEMENTARY
SERVICE MANUAL

First Edition, August 2001

EB001000

NOTICE

This manual was produced by the Yamaha Motor Company primarily for use by Yamaha dealers and their qualified mechanics. It is not possible to include all the knowledge of a mechanic in one manual, so it is assumed that anyone who uses this book to perform maintenance and repairs on Yamaha machine has a basic understanding of the mechanical ideas and the procedures of machine repair. Repairs attempted by anyone without this knowledge are likely to render the machine unsafe and unfit for use.

Yamaha Motor Company, Ltd. is continually striving to improve all its models. Modifications and significant changes in specifications or procedures will be forwarded to all authorized Yamaha dealers and will appear in future editions of this manual where applicable.

NOTE:
Designs and specifications are subject to change without notice.

IMPORTANT INFORMATION

Particularly important information is distinguished in this manual by the following notations.

⚠ The Safety Alert Symbol means ATTENTION! BECOME ALERT! YOUR SAFETY IS INVOLVED!

⚠ WARNING Failure to follow WARNING instructions could result in severe injury or death to the machine operator, a bystander or a person inspecting or repairing the machine.

CAUTION: A CAUTION indicates special precautions that must be taken to avoid damage to the machine.

NOTE: A NOTE provides key information to make procedures easier or clearer.

EB002000

HOW TO USE THIS MANUAL

MANUAL ORGANIZATION

This manual consists of chapters for the main categories of subjects. (See “Illustrated symbols”)

1st title ①: This is the title of the chapter with its symbol in the upper right corner of each page.

2nd title ②: This title indicates the section of the chapter and only appears on the first page of each section. It is located in the upper left corner of the page.

3rd title ③: This title indicates a sub-section that is followed by step-by-step procedures accompanied by corresponding illustrations.

EXPLODED DIAGRAMS

To help identify parts and clarify procedure steps, there are exploded diagrams at the start of each removal and disassembly section.

1. An easy-to-see exploded diagram ④ is provided for removal and disassembly jobs.
2. Numbers ⑤ are given in the order of the jobs in the exploded diagram. A number that is enclosed by a circle indicates a disassembly step.
3. An explanation of jobs and notes is presented in an easy-to-read way by the use of symbol marks ⑥. The meanings of the symbol marks are given on the next page.
4. A job instruction chart ⑦ accompanies the exploded diagram, providing the order of jobs, names of parts, notes in jobs, etc.
5. For jobs requiring more information, the step-by-step format supplements ⑧ are given in addition to the exploded diagram and the job instruction chart.

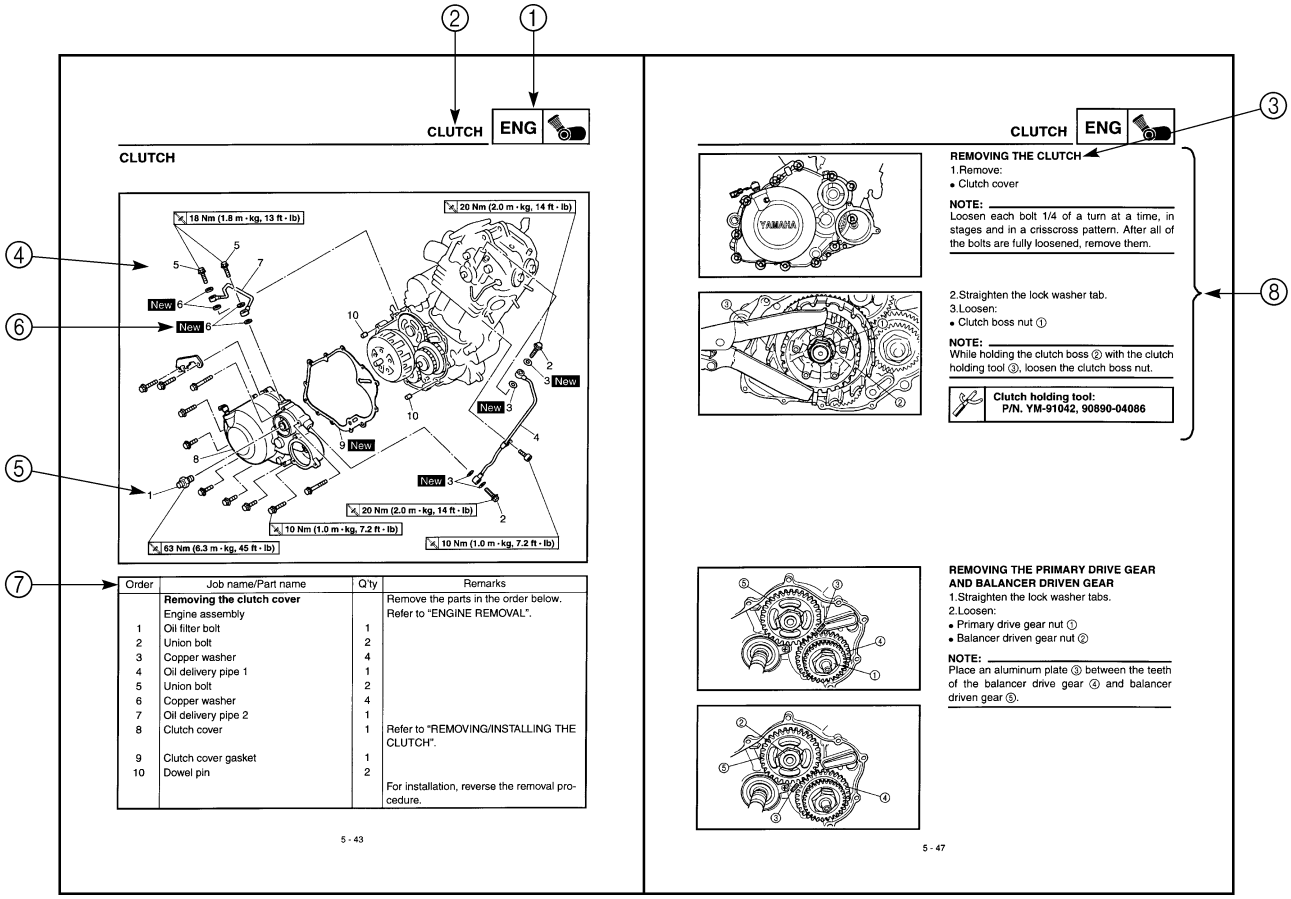

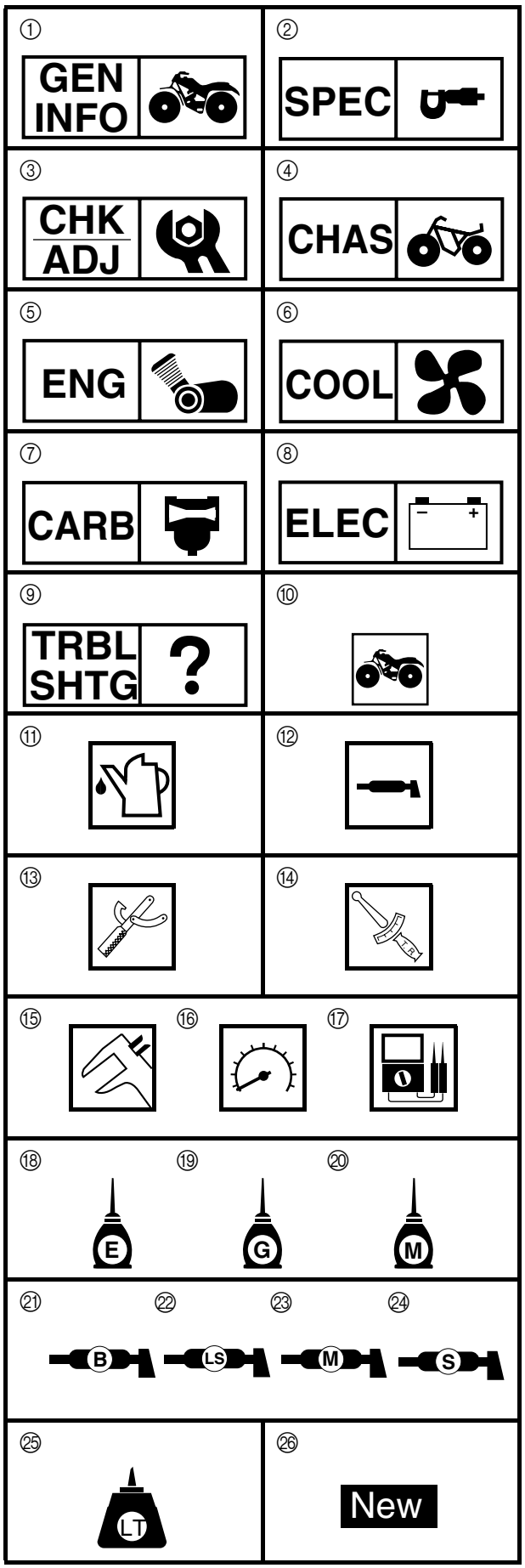

EB003000

ILLUSTRATED SYMBOLS

Illustrated symbols ① to ⑨ are printed on the top right of each page and indicate the subject of each chapter.

① General information
② Specifications
③ Periodic checks and adjustments
④ Chassis
⑤ Engine
⑥ Cooling system
⑦ Carburetion
⑧ Electrical
⑨ Troubleshooting

Illustrated symbols ⑩ to ⑰ are used to identify the specifications appearing in the text.

⑩ Can be serviced with engine mounted
⑪ Filling fluid
⑫ Lubricant
⑬ Special tool
⑭ Torque
⑮ Wear limit, clearance
⑯ Engine speed
⑰ Ω, V, A

Illustrated symbols ⑱ to ㉔ in the exploded diagrams indicate the types of lubricants and lubrication points.

⑱ Apply engine oil
⑲ Apply gear oil
⑳ Apply molybdenum disulfide oil
㉑ Apply wheel bearing grease
㉒ Apply lightweight lithium soap base grease
㉓ Apply molybdenum disulfide grease
㉔ Apply silicon grease

Illustrated symbols ㉕ to ㉖ in the exploded diagrams indicate where to apply a locking agent ㉕ and when to install a new part ㉖.

㉕ Apply the locking agent (LOCTITE®)
㉖ Replace

CONTENTS

SPECIFICATIONS

GENERAL SPECIFICATIONS

Item	Standard
Model code:	5LP6 : (For CDN) 5LP7 : (For Europe)
Transmission:	
Primary reduction system	Spur gear
Primary reduction ratio	71/34 (2.088)
Secondary reduction system	Chain drive
Secondary reduction ratio	40/13 (3.076)
Transmission type	Constant mesh, 5-speed/forward. 1-speed/reverse
Operation	Left foot operation
Gear ratio	
1st gear	31/12 (2.583)
2nd gear	30/18 (1.667)
3rd gear	27/21 (1.286)
4th gear	22/21 (1.047)
5th gear	19/21 (0.904)
Reverse gear	33/25 × 25/18 (1.833)

MAINTENANCE SPECIFICATIONS

ENGINE

Item		Standard	Limit
Cylinder head:			
Warp limit 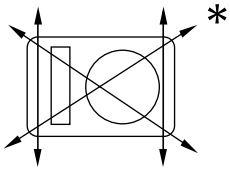		----	0.03 mm (0.001 in)
Timing chain:			
Timing chain type/No. of links		82RH2015/126	----
Timing chain adjustment method		Automatic	----
Rocker arm/rocker arm shaft:			
Bearing inside diameter		12.000 ~ 12.018 mm (0.4724 ~ 0.4731 in)	----
Shaft outside diameter		11.976 ~ 11.991 mm (0.4715 ~ 0.4721 in)	----
Arm-to-shaft clearance		0.009 ~ 0.042 mm (0.0004 ~ 0.0017 in)	----
Valve, valve seat, valve guide:			
Valve clearance (cold)	IN	0.10 ~ 0.15 mm (0.0039 ~ 0.0059 in)	----
	EX	0.15 ~ 0.20 mm (0.0059 ~ 0.0079 in)	----
Valve dimensions			
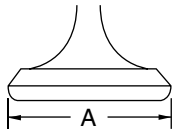 Head Diameter			
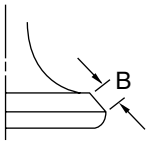 Face Width			
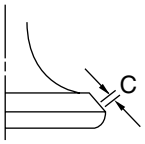 Seat Width			
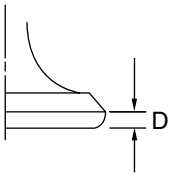 Margin Thickness			
“A” head diameter	IN	29.9 ~ 30.1 mm (1.1772 ~ 1.1850 in)	----
	EX	31.9 ~ 32.1 mm (1.2559 ~ 1.2638 in)	----
“B” face width	IN	2.25 mm (0.0886 in)	----
	EX	2.26 mm (0.0890 in)	----
“C” seat width	IN	1.1 ~ 1.3 mm (0.0433 ~ 0.0512 in)	1.6 mm (0.0630 in)
	EX	0.9 ~ 1.1 mm (0.0354 ~ 0.0433 in)	1.6 mm (0.0630 in)
“D” margin thickness	IN	0.85 ~ 1.15 mm (0.0335 ~ 0.0453 in)	----
	EX	0.85 ~ 1.15 mm (0.0335 ~ 0.0453 in)	----

Item		Standard	Limit
Stem outside diameter	IN	5.975 ~ 5.990 mm (0.2352 ~ 0.2358 in)	5.945 mm (0.2341 in)
	EX	5.960 ~ 5.975 mm (0.2346 ~ 0.2352 in)	5.930 mm (0.2335 in)
Guide inside diameter	IN	6.000 ~ 6.012 mm (0.2362 ~ 0.2367 in)	6.040 mm (0.2378 in)
	EX	6.000 ~ 6.012 mm (0.2362 ~ 0.2367 in)	6.040 mm (0.2378 in)
Stem-to-guide clearance	IN	0.010 ~ 0.037 mm (0.0004 ~ 0.0015 in)	0.08 mm (0.0031 in)
	EX	0.025 ~ 0.052 mm (0.0010 ~ 0.0020 in)	0.10 mm (0.0039 in)
Stem runout limit		----	0.01 mm (0.0004 in)
Valve seat width	IN	1.1 ~ 1.3 mm (0.0433 ~ 0.0512 in)	1.6 mm (0.0630 in)
	EX	0.9 ~ 1.1 mm (0.0354 ~ 0.0433 in)	1.6 mm (0.0630 in)
Piston:			
Piston to cylinder clearance		0.05 ~ 0.07 mm (0.0020 ~ 0.0028 in)	0.15 mm (0.0059 in)
Piston size “D”		99.945 ~ 99.995 mm (3.9348 ~ 3.9368 in)	----
Measuring point “H”		2.5 mm (0.10 in)	----
Piston off-set		1.0 mm (0.04 in)	----
Off-set direction		Intake side	----
Piston pin bore inside diameter		22.004 ~ 22.015 mm (0.8663 ~ 0.8667 in)	22.045 mm (0.8679 in)
Piston pin outside diameter		21.991 ~ 22.000 mm (0.8658 ~ 0.8661 in)	21.971 mm (0.8650 in)

Item	Standard	Limit
Piston rings:		
Top ring		
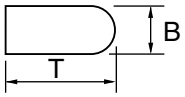		
Type	Barrel	----
Dimensions (B × T)	1.2 × 3.8 mm (0.0472 × 0.1496 in)	----
End gap (installed)	0.30 ~ 0.45 mm (0.0118 ~ 0.0177 in)	0.70 mm (0.0276 in)
Side clearance (installed)	0.04 ~ 0.08 mm (0.0016 ~ 0.0031 in)	0.13 mm (0.0051 in)
2nd ring		
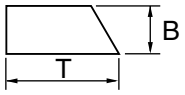		
Type	Taper	----
Dimensions (B × T)	1.2 × 4.0 mm (0.0472 × 0.1575 in)	----
End gap (installed)	0.30 ~ 0.45 mm (0.0118 ~ 0.0177 in)	0.80 mm (0.0315 in)
Side clearance	0.03 ~ 0.07 mm (0.0012 ~ 0.0028 in)	0.13 mm (0.0051 in)
Oil ring		
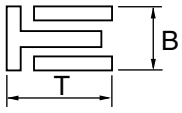		
Dimensions (B × T)	2.5 × 3.4 mm (0.0984 × 0.1339 in)	----
End gap (installed)	0.2 ~ 0.7 mm (0.0079 ~ 0.0276 in)	----
Side clearance	0.06 ~ 0.15 mm (0.0024 ~ 0.0059 in)	----

Item		Standard	Limit
Carburetors:			
I. D. mark		5LP5 20	----
Main jet	(M.J)	Carburetor #1 : #140	----
		Carburetor #2 : #145	----
Main air jet	(M.A.J)	#130	----
Jet needle	(J.N)	5ND16-56-3	----
Needle jet	(N.J)	P-6M (#826)	----
Pilot air jet	(P.A.J.1)	Carburetor #1 : #80	----
		Carburetor #2 : #150	----
Pilot air jet	(P.A.J.2)	1.3	----
Pilot outlet	(P.O)	Carburetor #1 : 1.0	----
		Carburetor #2 : 0.9	----
Pilot jet	(P.J)	#22.5	----
Bypass 1	(B.P.1)	0.8	----
Bypass 2	(B.P.2)	0.8	----
Valve seat size	(V.S)	2.0	----
Starter jet	(G.S.1)	#95	----
Starter jet	(G.S.2)	0.5	----
Throttle valve size	(Th.V)	#80	----
Float height	(F.H)	13 mm (0.51 in)	----
Fuel level	(F.L)	3 ~ 4 mm (0.12 ~ 0.16 in)	----
Engine idle speed		1,450 ~ 1,550 r/min	----
Intake vacuum		32.0 ~ 33.3 kPa (240 ~ 250 mmHg, 9.45 ~ 9.83 inHg)	----

Tightening torques

Part to be tightened	Part name	Thread size	Q'ty	Tightening torque			Remarks
				Nm	m·kg	ft·lb	
Air filter case	Bolt	M6	2	9	0.9	6.5	
Carburetor clamp	Bolt	M4	4	4	0.4	2.9	
Muffler and exhaust pipe 2	Bolt	M8	1	18	1.8	13	
Muffler	Bolt	M8	2	33	3.3	24	
AC magneto rotor	Nut	M14	1	140	14.0	100	

CHASSIS

Item	Standard	Limit
Brake lever and brake pedal:		
Brake lever free play (at lever end)	0 mm (0 in)	----
Brake pedal position	4 mm (0.16 in) (Below the top of footrest)	----
Throttle lever free play	3 ~ 5 mm (0.12 ~ 0.20 in)	----

Tightening torques

Part to be tightened	Thread size	Tightening torque			Remarks
		Nm	m·kg	ft·lb	
Rear shock absorber and frame	M12	80	8.0	58	
Relay arm and swingarm	M10	43	4.3	31	
Connecting arm and frame	M12	80	8.0	58	
Relay arm and rear shock absorber	M10	43	4.3	31	
Relay arm and connecting arm	M10	43	4.3	31	
Steering stem, pitman arm and frame	M14	180	18	130	
Frame and bearing retainer	M42	65	6.5	47	
Rear brake fluid reservoir cover and bracket	M6	11	1.1	8.0	
Rear carrier bar and frame	M8	33	3.3	24	
Footrest guard bracket and frame	M8	26	2.6	19	
Air filter case and frame	M6	9	0.9	6.5	
Carburetor clamp screw	M4	4	0.4	2.9	

CABLE ROUTING

① Carburetor air vent hose
② Coolant reservoir hose
③ Reservoir tank breather hose
④ CDI unit
⑤ Wire harness
⑥ Rectifier/regulator
⑦ Negative battery lead
⑧ AC magneto lead
⑨ Starter motor lead
⑩ Tail/brake light lead
⑪ Rectifier/regulator lead

[A] Pass the negative battery lead between the wire harness and frame.
[B] 25 ~ 35 mm (0.98 ~ 1.38 in)
[C] 50 ~ 60 mm (1.97 ~ 2.36 in)
[D] 50 ~ 70 mm (1.97 ~ 2.76 in)

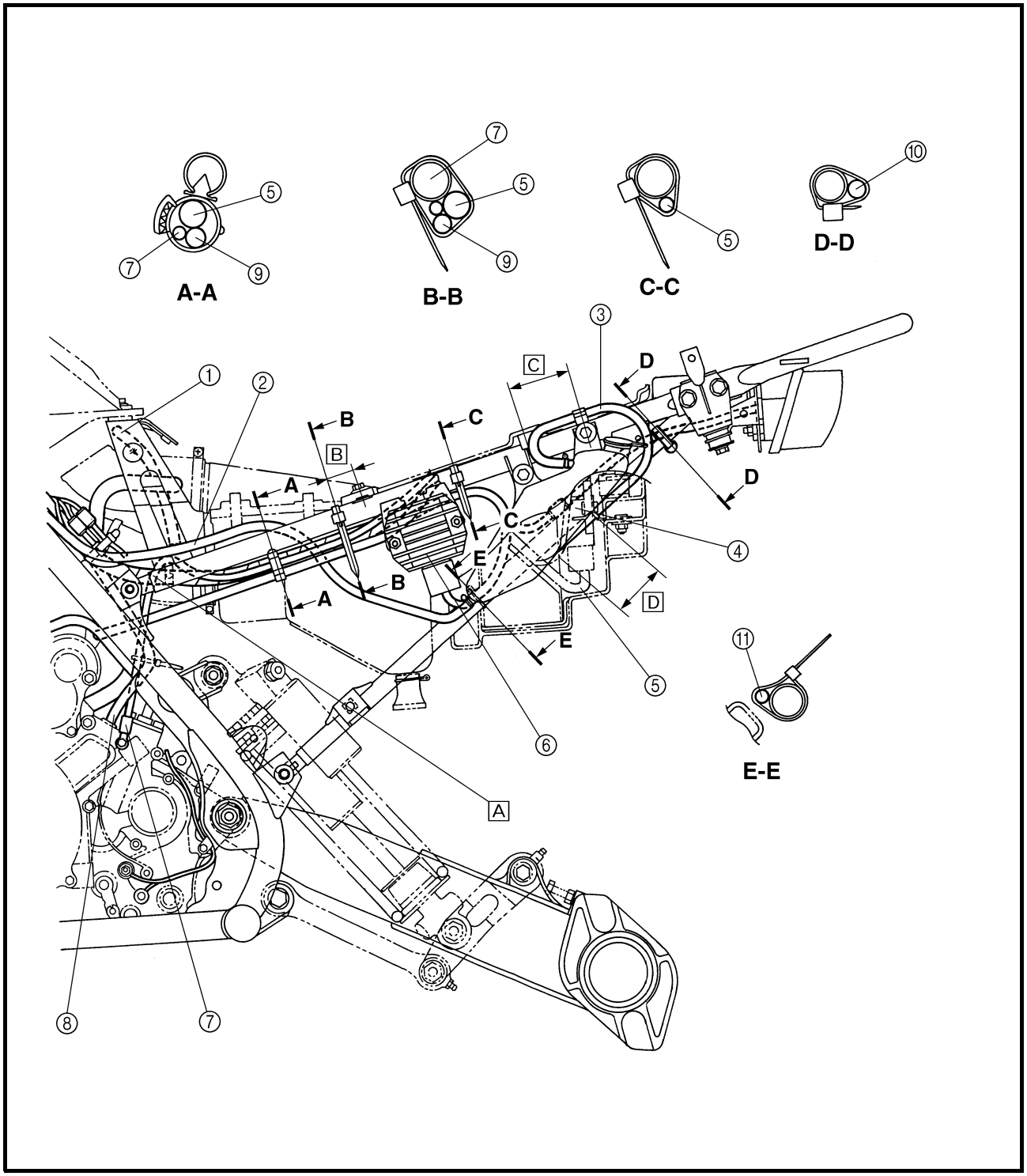

① Positive battery lead
② Tail/brake light lead
③ Coolant reservoir breather hose
④ Negative battery lead
⑤ Coolant reservoir hose
⑥ Starter motor lead
⑦ Wire harness

A Fasten the wire harness with the plastic clamp.
B Fasten the starter motor lead and starter relay lead with the plastic clamp.

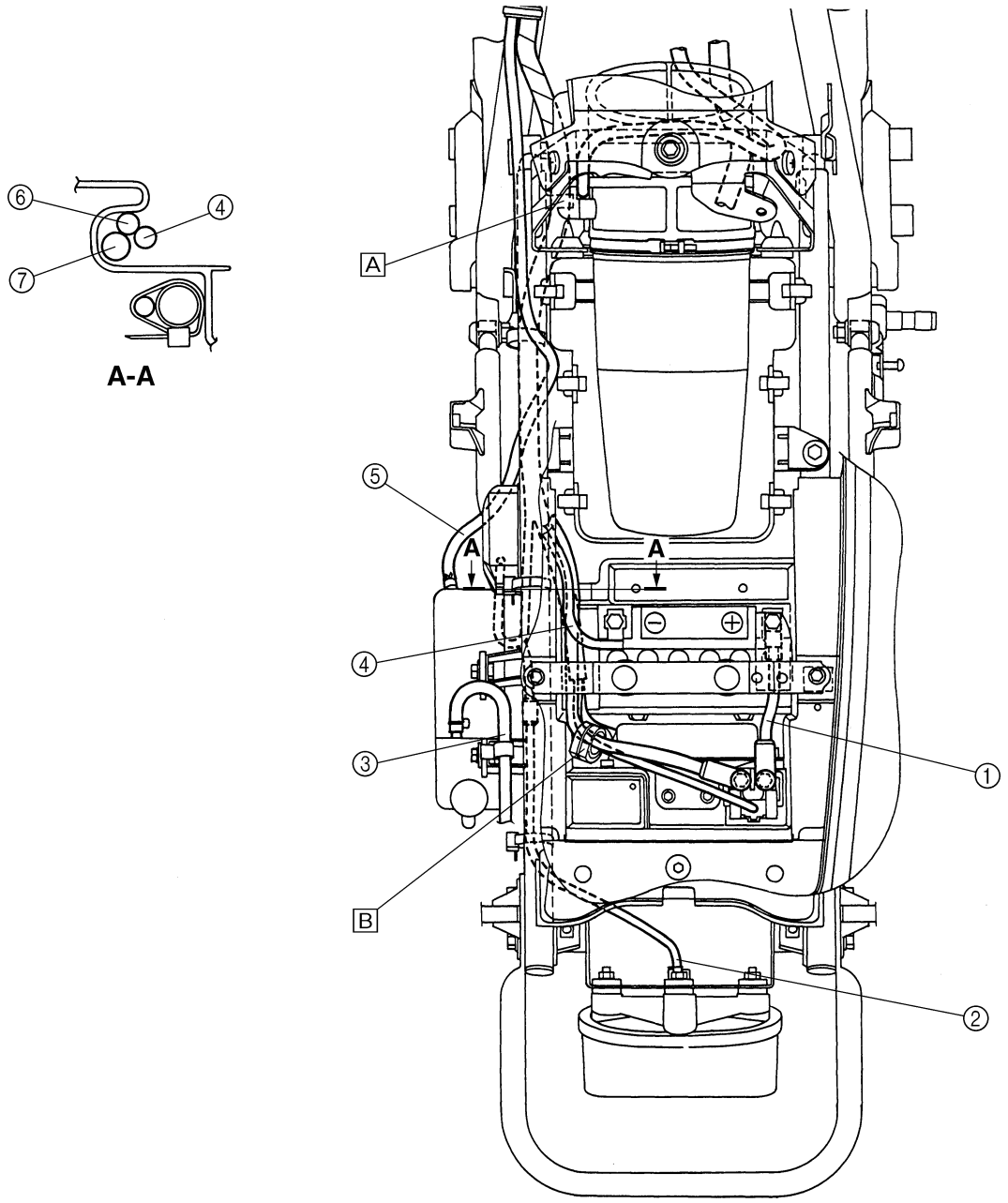

EB300000

PERIODIC CHECKS AND ADJUSTMENTS

INTRODUCTION

This chapter includes all information necessary to perform recommended inspections and adjustments. These preventive maintenance procedures, if followed, will ensure more reliable vehicle operation and a longer service life. The need for costly overhaul work will be greatly reduced. This information applies to vehicles already in service as well as to new vehicles that are being prepared for sale. All service technicians should be familiar with this entire chapter.

EB301000

PERIODIC MAINTENANCE/LUBRICATION INTERVALS

ITEM	ROUTINE	INITIAL			EVERY	
		1 month	3 months	6 months	6 months	1 year
Valves*	• Check valve clearance. • Adjust if necessary.	○		○	○	○
Cooling system	• Check coolant leakage. • Repair if necessary. • Replace coolant every 24 months.	○	○	○	○	○
Spark plug	• Check condition. • Adjust gap and clean. • Replace if necessary.	○	○	○	○	○
Air filter element	• Clean. • Replace if necessary.	Every 20 ~ 40 hours (More often in wet or dusty areas.)				
Carburetors*	• Check starter (choke) operation. • Adjust engine idling speed and synchronization.		○	○	○	○
Crankcase breather system*	• Check breather hose for cracks or damage. • Replace if necessary.			○	○	○
Exhaust system*	• Check for leakage. • Tighten if necessary. • Replace gasket if necessary.			○	○	○
Fuel line*	• Check fuel hose for cracks or damage. • Replace if necessary.			○	○	○
Engine oil	• Replace (Warm engine before draining).	○		○	○	○
Engine oil filter cartridge	• Replace if necessary.	○		○		○
Drive chain	• Check and adjust slack/alignment/clean/lube.	○	○	○	○	○
Front brake	• Check free play/operation/fluid leakage/See NOTE Page 10. • Correct if necessary.	○	○	○	○	○
Rear brake*	• Check operation/fluid leakage/See NOTE Page 10. • Correct if necessary.	○	○	○	○	○
Clutch*	• Check operation. • Adjust if necessary.	○		○	○	○
Wheels*	• Check balance/damage/runout. • Replace if necessary.	○		○	○	○
Wheel bearings*	• Check bearing assembly for looseness/damage. • Replace if damaged.	○		○	○	○
Steering system*	• Check operation. • Repair if damaged. • Check toe-in. • Adjust if necessary.	○	○	○	○	○
Upper and lower arm pivot and steering shaft*	• Lubricate every 6 months.**			○	○	○
Rear arm pivot*	• Lubricate every 6 months.**			○	○	○
Fittings and fasteners*	• Check all chassis fittings and fasteners. • Correct if necessary.	○	○	○	○	○

* It is recommended that these items be serviced by a Yamaha dealer.
** Lithium soap base grease

NOTE:

- Recommended brake fluid: DOT 4
- Brake fluid replacement:

1. When disassembling the master cylinder or caliper cylinder, replace the brake fluid.
   Normally check the brake fluid level and add fluid as required.
2. On the inner parts of the master cylinder and caliper cylinder, replace the oil seals every two years.
3. Replace the brake hoses every four years, or if cracked or damaged.

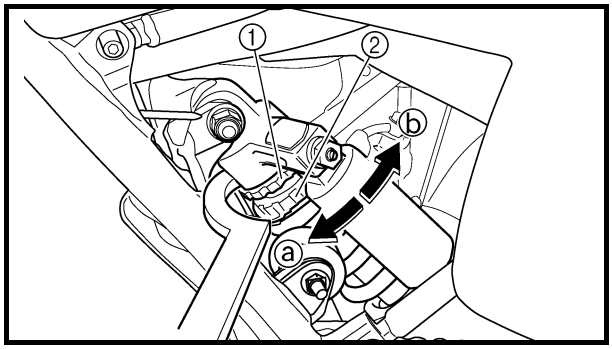

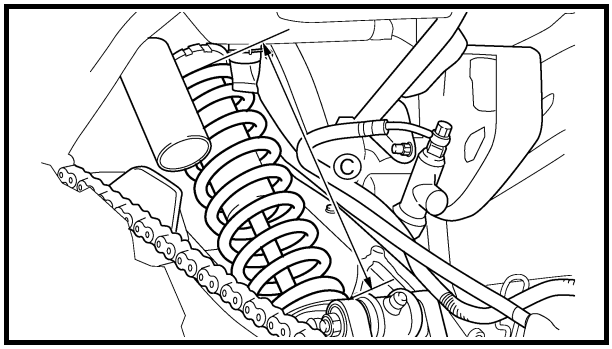

CHASSIS

ADJUSTING THE REAR SHOCK ABSORBER

1.Adjust:
- Spring preload

****

Adjustment steps:
- Elevate the rear wheels by placing a suitable stand under the frame.
- Loosen the locknut ①.
- Turn the adjusting ring ② in direction ⓐ or ⓑ.

Direction ⓐ	**Spring preload is increased (suspension is harder).**
Direction ⓑ	**Spring preload is decreased (suspension is softer).**

Adjusting length ⓒ:
Standard: 240 mm (9.45 in)
Minimum: 232 mm (9.13 in)
Maximum: 247 mm (9.72 in)

NOTE:
- Be sure to remove all dirt and mud from around the locknut and adjusting ring before adjustment.
- The length of the spring (installed) changes 1.5 mm (0.06 in) per turn of the adjuster.

CAUTION:
Never attempt to turn the adjusting ring beyond the maximum or minimum setting.

- Tighten the locknut ①.

Locknut:
42 Nm (4.2 m • kg, 30 ft • lb)

NOTE:
Always tighten the locknut against the adjusting ring, then torque it to specification.

****

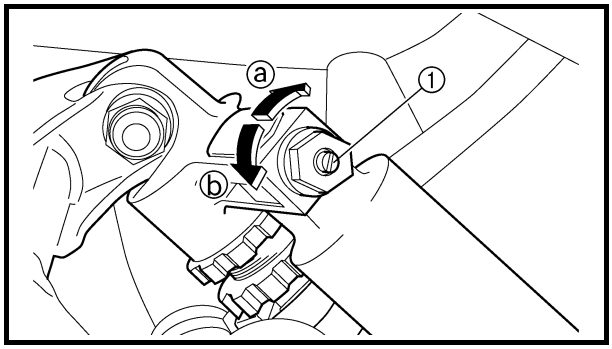

2.Adjust:
- Rebound damping force

****

Adjustment steps:
- Turn the adjusting screw ① in direction ⓐ or ⓑ.

Direction ⓐ	**Rebound damping force is increased.**
Direction ⓑ	**Rebound damping force is decreased.**

From the fully turned-out position:
Standard: 7 clicks in
Minimum: 1 clicks in
Maximum: 12 clicks in

CAUTION:

Do not force the adjuster past the minimum or maximum extent of adjustment. The adjuster may be damaged.

****

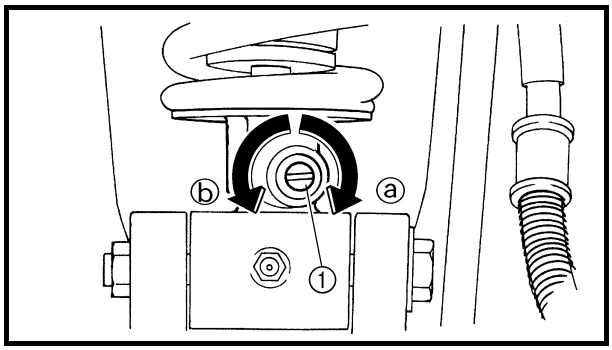

3.Adjust:
- Compression damping force

****

Adjustment steps:
- Turn the adjusting screw ① in direction ⓐ or ⓑ.

Direction ⓐ	**Compression damping force is increased.**
Direction ⓑ	**Compression damping force is decreased.**

From the fully turned-in position:
Standard: 10 clicks out
Minimum: 20 clicks out
Maximum: 3 clicks out

CAUTION:

Do not force the adjuster past the minimum or maximum extent of adjustment. The adjuster may be damaged.

****

CHASSIS

REAR SHOCK ABSORBER AND RELAY ARM

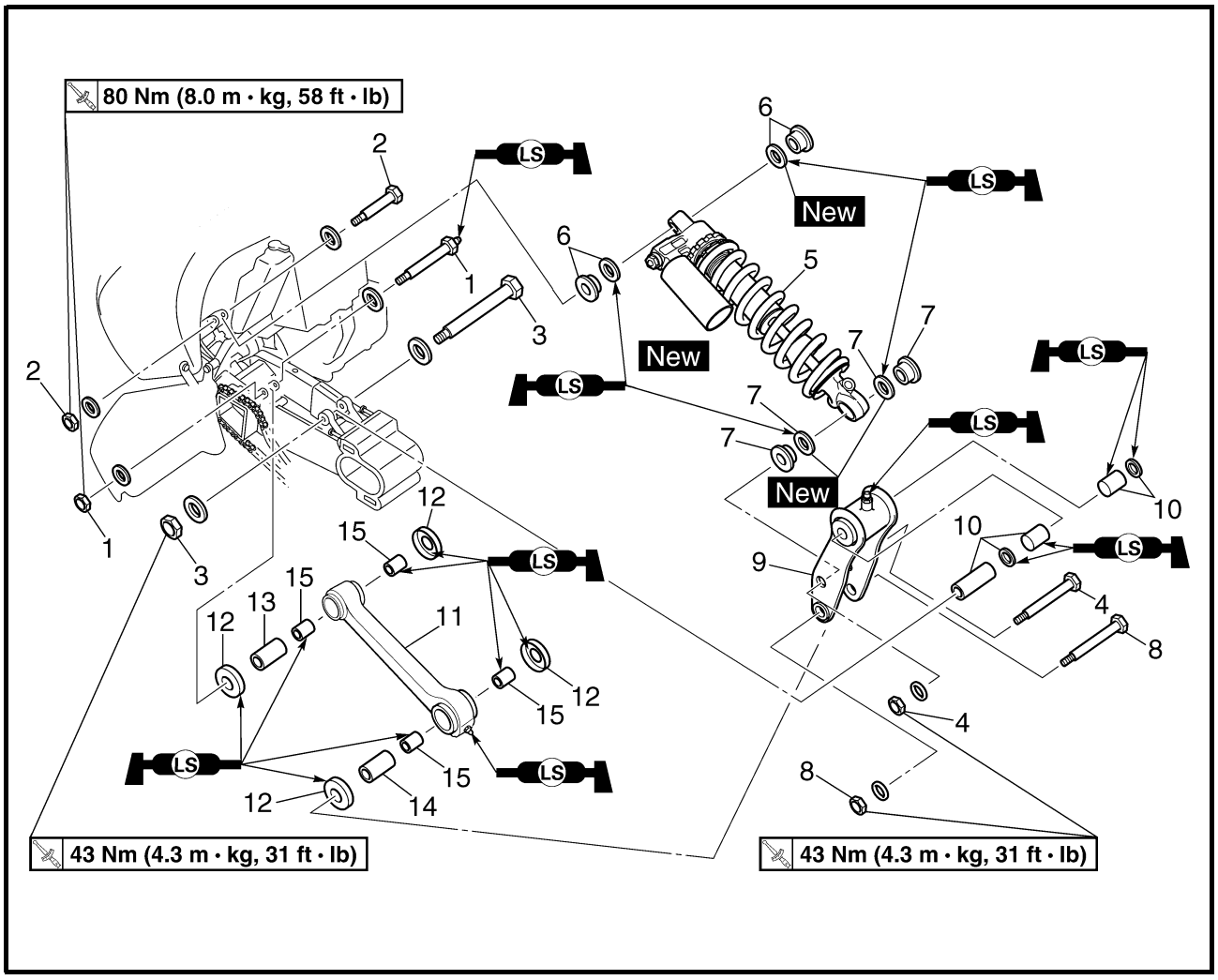

Order	Job name/Part name	Q'ty	Remarks
	Removing the rear shock absorber and relay arm		Remove the parts in the order below.
	Muffler/exhaust pipe		Refer to "ENGINE REMOVAL" in CHAPTER 5. (Manual No.: 5LP2-AE1)
	Rear wheels and hub		Refer to "REAR WHEELS, WHEEL AXLE AND HUB".
1	Self-locking nut/bolt	1/1	Refer to "REMOVING THE REAR SHOCK ABSORBER".
2	Self-locking nut/bolt	1/1	
3	Self-locking nut/bolt	1/1	
4	Self-locking nut/bolt	1/1	
5	Rear shock absorber	1	
6	Collar/oil seal	2/2	
7	Collar/oil seal	2/2	

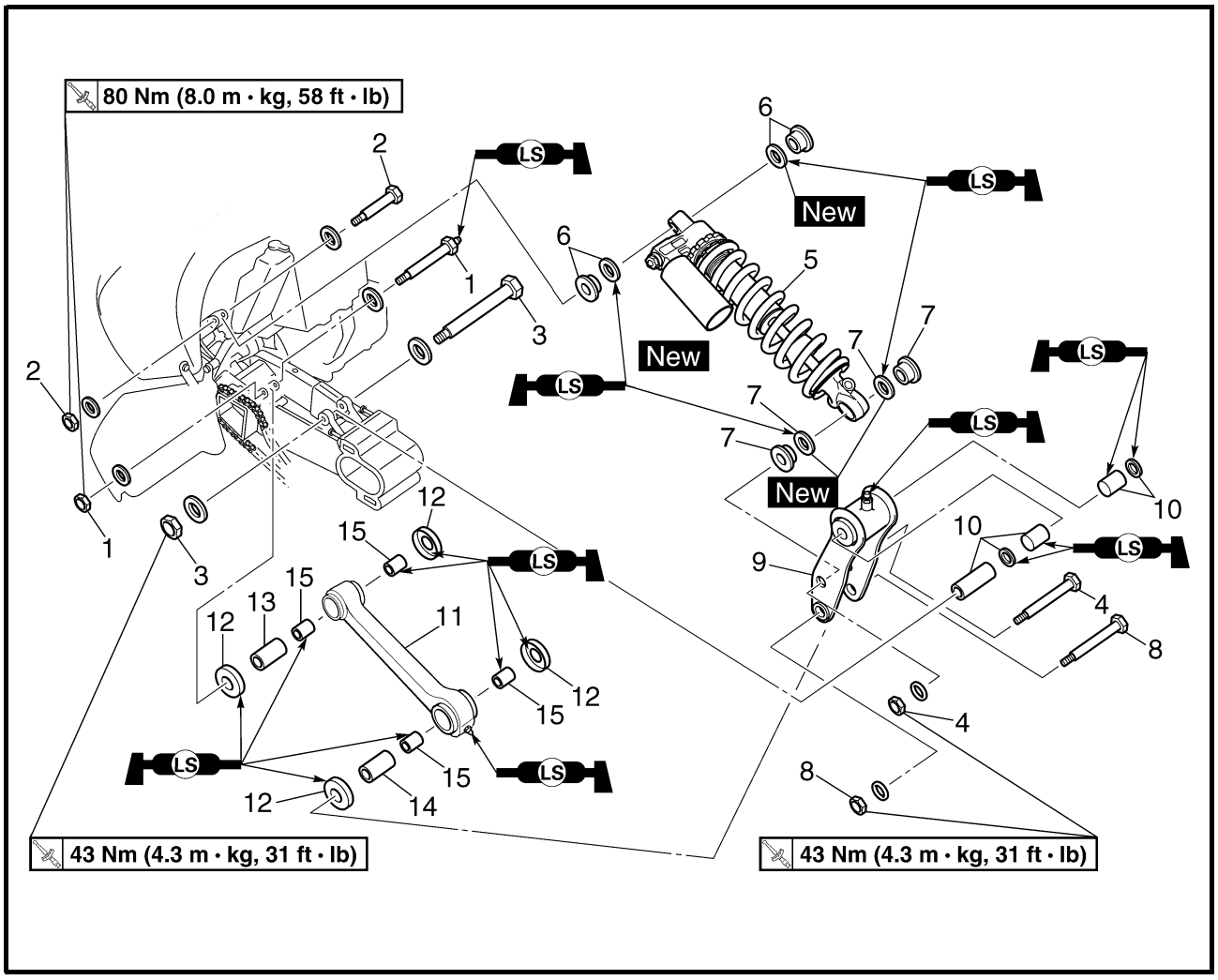

Order	Job name/Part name	Q'ty	Remarks
8	Self-locking nut/bolt	1/1	
9	Relay arm	1	
10	Spacer/oil seal/bushing	1/2/2	Refer to "INSTALLING THE RELAY ARM AND CONNECTING ARM".
11	Connecting arm	1	
12	Dust cover	4	
13	Spacer	1	
14	Spacer	1	
15	Bushing	4	Refer to "INSTALLING THE RELAY ARM AND CONNECTING ARM". For installation, reverse the removal procedure.

HANDLING THE REAR SHOCK ABSORBER AND GAS CYLINDER

⚠ WARNING

This rear shock absorber and gas cylinder contain highly compressed nitrogen gas. Before handling the rear shock absorber or gas cylinder, read and make sure you understand the following information. The manufacturer cannot be held responsible for property damage or personal injury that may result from improper handling of the rear shock absorber and gas cylinder.

- **Do not tamper or attempt to open the rear shock absorber or gas cylinder.**
- **Do not subject the rear shock absorber or gas cylinder to an open flame or any other source of high heat. High heat can cause an explosion due to excessive gas pressure.**
- **Do not deform or damage the rear shock absorber or gas cylinder in any way. If the rear shock absorber, gas cylinder or both are damaged, damping performance will suffer.**

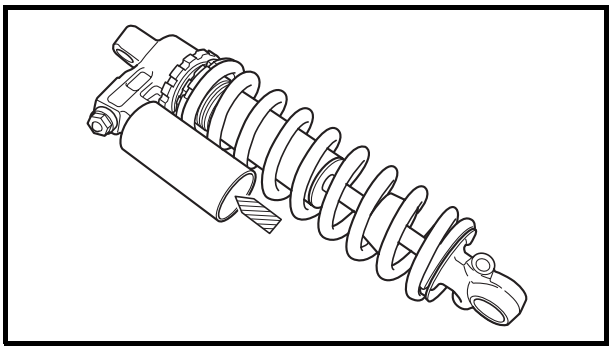

DISPOSING OF A REAR SHOCK ABSORBER AND GAS CYLINDER

Gas pressure must be released before disposing of a rear shock absorber and gas cylinder. To release the gas pressure, press on the gas valve needle with a suitable tool as shown, until all of the gas is released (the hissing has stopped).

⚠ WARNING

Wear eye protection to prevent eye damage from released gas or metal chips.

REMOVING THE REAR SHOCK ABSORBER

1.Remove:
- Connecting arm-to-frame bolt
- Rear shock absorber upper bolt

NOTE:
While removing the connecting arm-to-frame bolt, hold the swingarm so that it does not drop down.

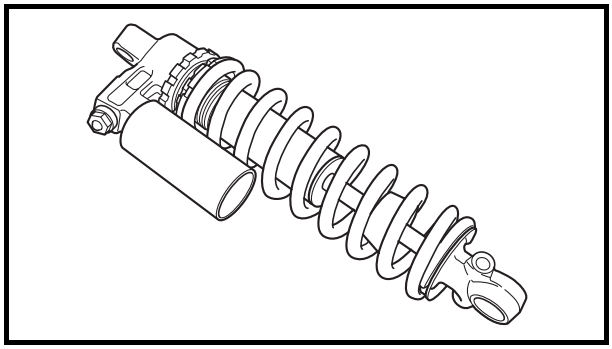

CHECKING THE REAR SHOCK ABSORBER

1.Check:
- Shock absorber
  Oil leaks → Replace the rear shock absorber assembly.
- Shock absorber rod
  Bends/damage → Replace the rear shock absorber assembly.
- Spring
  Fatigue → Replace the rear shock absorber assembly.
  Move the spring up and down.
- Gas cylinder
  Damage/gas leaks → Replace the rear shock absorber assembly.

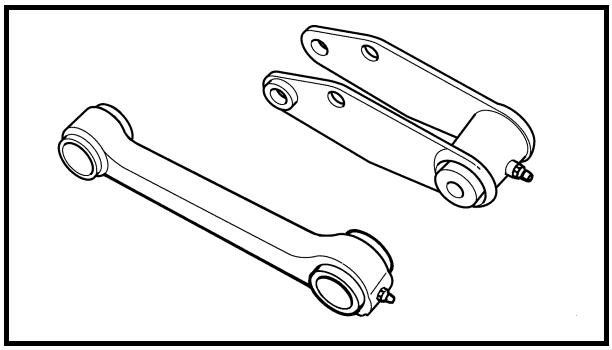

CHECKING THE RELAY ARM AND CONNECTING ARM

1.Check:
- Relay arm
- Connecting arm
  Damage/wear → Replace.
- Bushings
- Spacers
- Oil seals
  Damage/pitting/scratches → Replace.

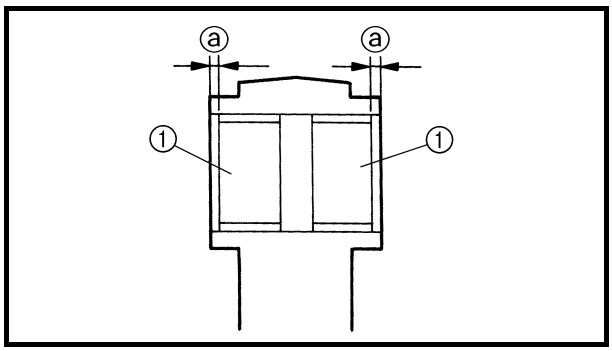

INSTALLING THE RELAY ARM AND CONNECTING ARM

1.Install:
- Bushing ①
  (to connecting arm)

NOTE:
Apply the lithium soap base grease on the bushing when installing.

Installed depth of bushing ⓐ:
1 mm (0.04 in)

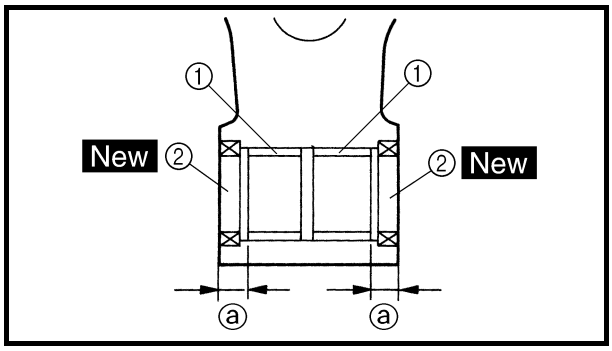

2.Install:
- Bushing ①
- Oil seal ② New
  (to relay arm)

NOTE:
Apply the lithium soap base grease on the bushing when installing.

Installed depth of bushing ⓐ:
6.5 mm (0.26 in)

INSTALLING THE REAR SHOCK ABSORBER

1.Install:
- Connecting arm
- Relay arm
- Rear shock absorber

NOTE:
When installing the rear shock absorber, lift up the swingarm.

SWINGARM AND DRIVE CHAIN

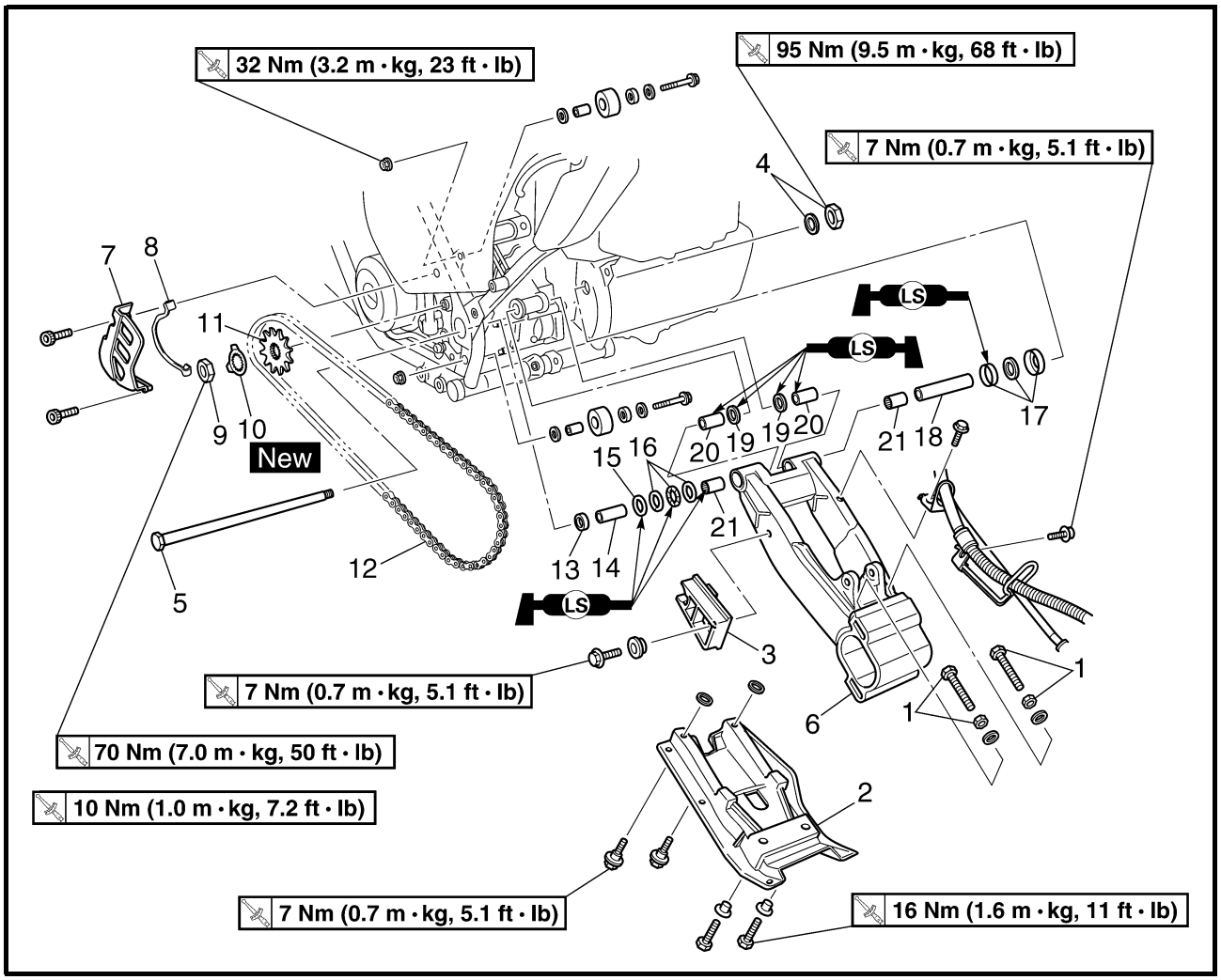

Order	Job name/Part name	Q'ty	Remarks
	Removing the swingarm and drive chain		Remove the parts in the order below.
	Rear wheels and hub		Refer to "REAR WHEELS, WHEEL AXLE AND HUB".
	Rear shock absorber		Refer to "REAR SHOCK ABSORBER AND RELAY ARM".
	Left footrest and left footrest guard bracket		Refer to "ENGINE REMOVAL" in CHAPTER 5. (Manual No.: 5LP2-AE1)
1	Adjusting bolt/nut	2/2	
2	Swingarm skid plate	1	
3	Drive chain guide	1	
4	Pivot shaft nut/washer	1/1	
5	Pivot shaft	1	
6	Swingarm	1	Refer to "REMOVING THE SWINGARM".
7	Drive sprocket cover	1	
8	Drive chain guide	1	

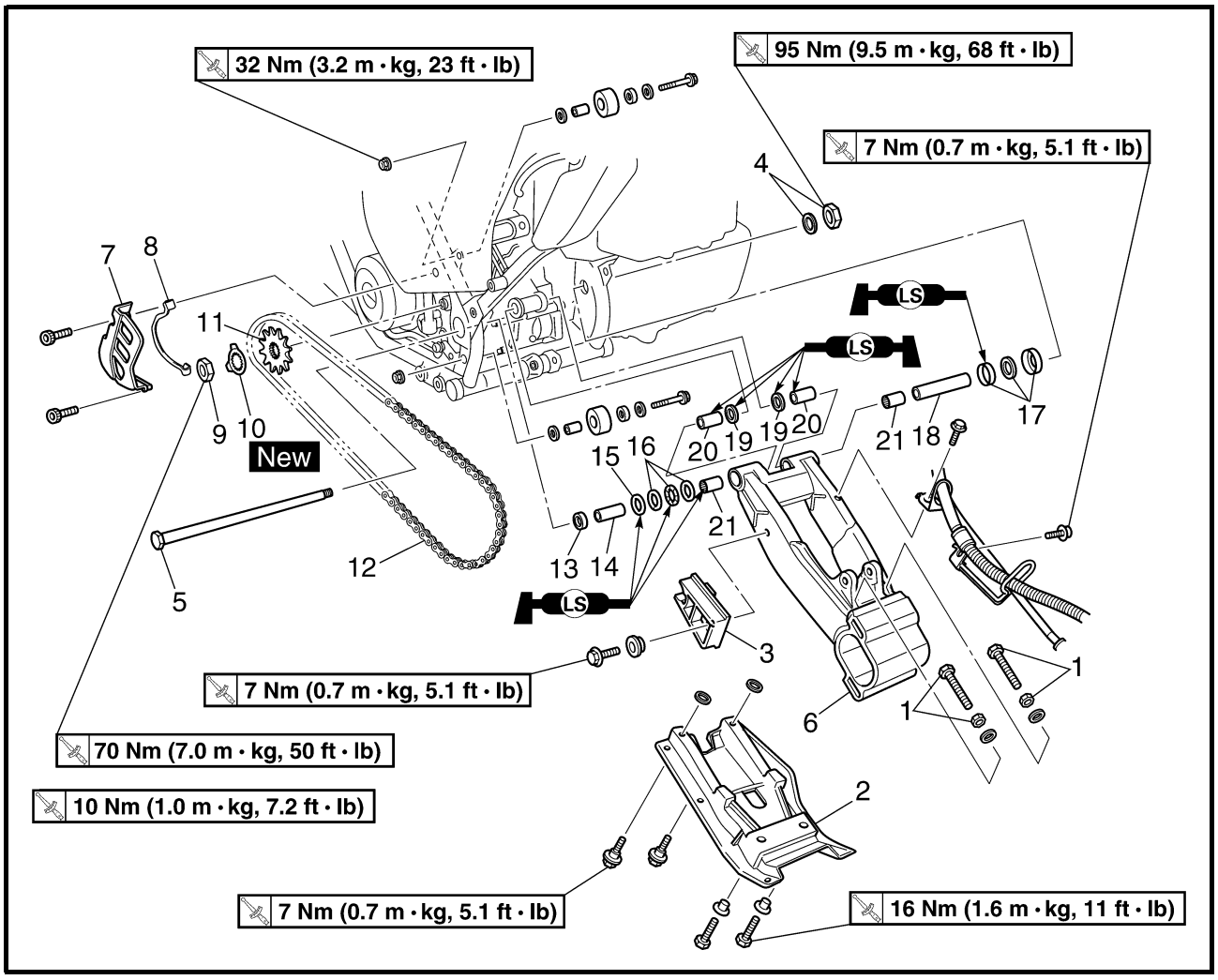

Order	Job name/Part name	Q'ty	Remarks
9	Nut	1	Refer to "INSTALLING THE DRIVE SPROCKET".
10	Lock washer	1	
11	Drive sprocket	1	
12	Drive chain	1	
13	Collar	1	
14	Spacer	1	
15	Oil seal	1	
16	Bearing	1	
17	Dust cover/oil seal/washer	1/1/1	
18	Spacer	1	
19	Oil seal	2	
20	Bushing	2	Refer to "INSTALLING THE SWINGARM".
21	Bearing	2	
			For installation, reverse the removal procedure.

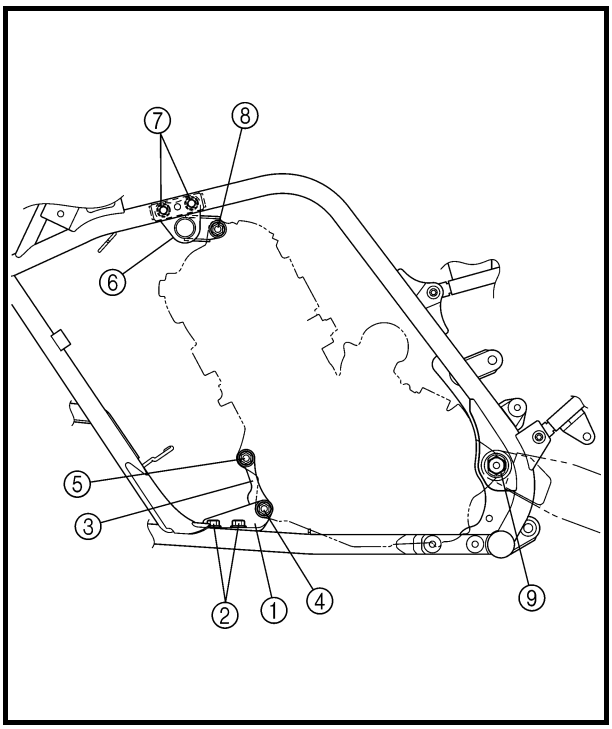

ENGINE

ENGINE REMOVAL

INSTALLING THE ENGINE

1.Install:
- Engine brackets (lower) ①
- Engine bracket bolts (lower) ②
- Engine brackets (middle) ③
- Engine mounting bolt (lower)/nut ④
- Engine mounting bolt (middle)/nut ⑤
- Engine bracket (upper) ⑥
- Engine bracket bolts (upper) ⑦
- Engine mounting bolt (upper)/nut ⑧

NOTE:
Do not fully tighten the bolts and nuts.

2.Install:
- Swingarm
- Pivot shaft/nut ⑨

NOTE:
Do not fully tighten the pivot shaft nut.

3.Tighten:
- Engine bracket bolt (upper) ⑦
  33 Nm (3.3 m • kg, 24 ft • lb)
- Pivot shaft/nut ⑨
  95 Nm (9.5 m • kg, 68 ft • lb)
- Engine mounting bolt (upper)/nut ⑧
  40 Nm (4.0 m • kg, 29 ft • lb)
- Engine mounting bolt (middle)/nut ⑤
  56 Nm (5.6 m • kg, 40 ft • lb)
- Engine mounting bolt (lower)/nut ④
  56 Nm (5.6 m • kg, 40 ft • lb)
- Engine bracket bolt (lower) ②
  56 Nm (5.6 m • kg, 40 ft • lb)

AC MAGNETO

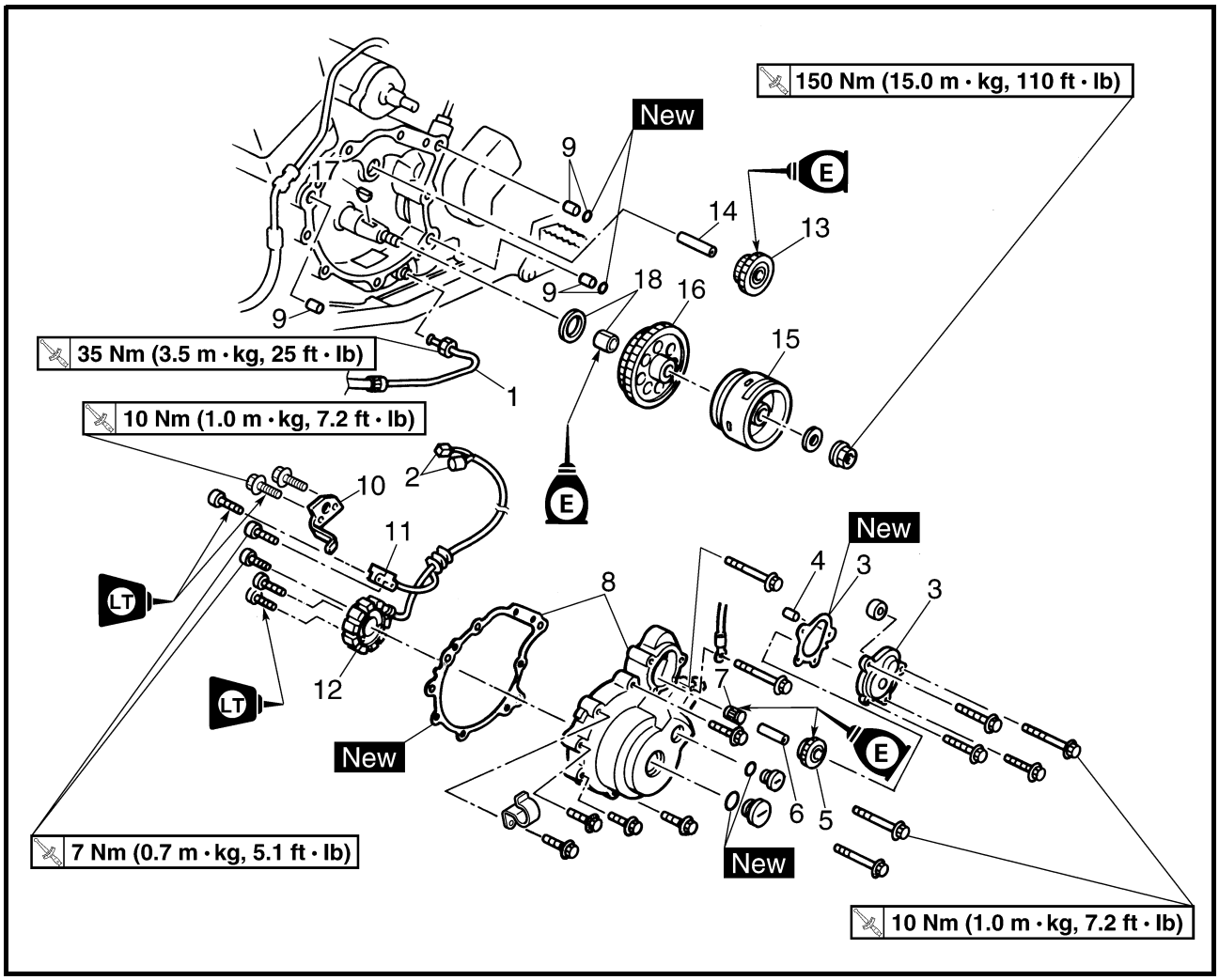

Order	Job name/Part name	Q'ty	Remarks
	Removing the AC magneto		Remove the parts in the order below.
	Engine oil		Drain.
	Shift pedal link		Disconnect.
1	Oil pipe 1	1	Disconnect.
2	AC magneto coupler	2	
3	Starter idle gear cover/gasket	1/1	
4	Dowel pin	1	
5	Starter idle gear 1	1	
6	Starter idle gear 1 shaft	1	
7	Bearing	1	
8	AC magneto cover/gasket	1/1	Refer to "REMOVING/INSTALLING THE AC MAGNETO ROTOR".

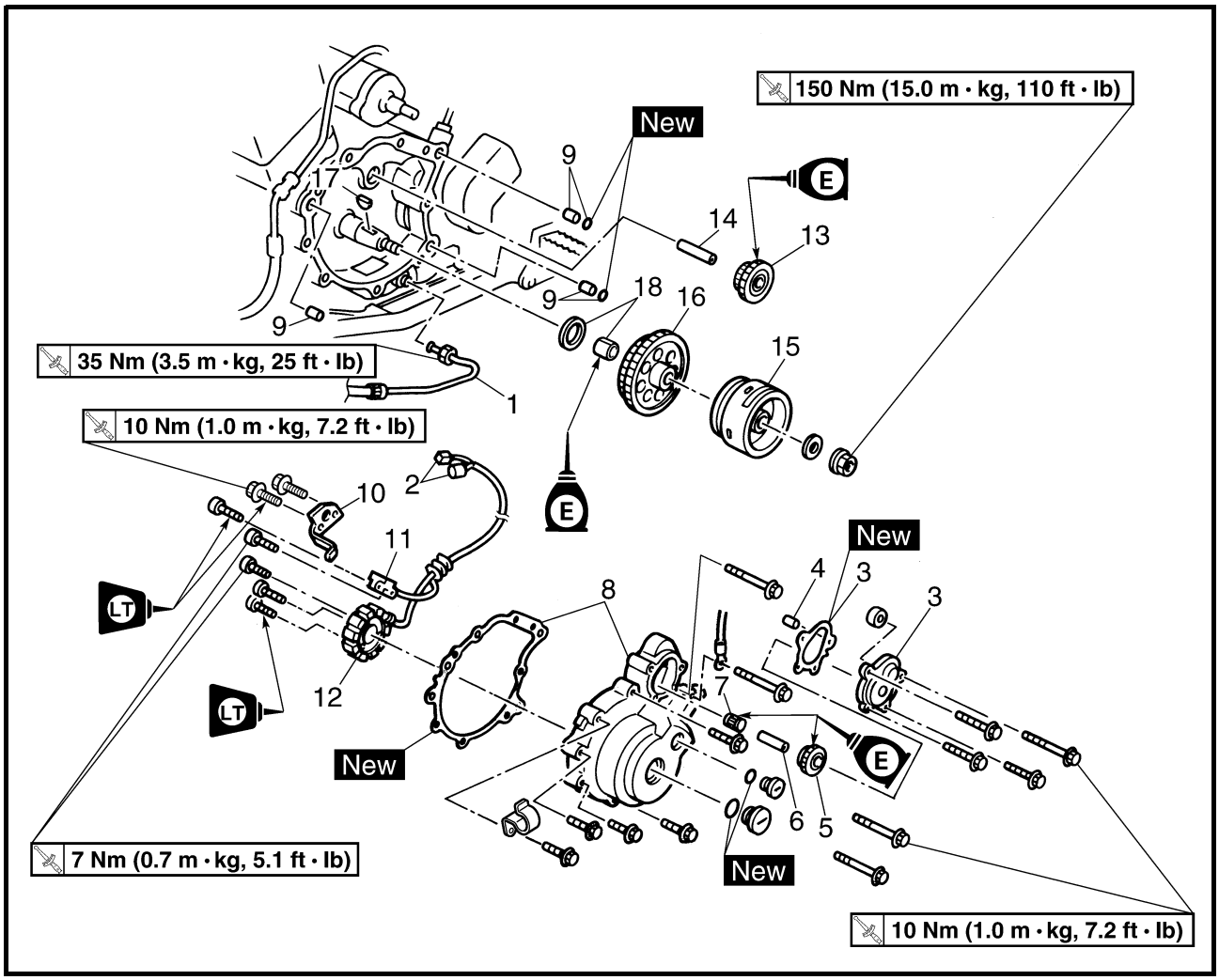

Order	Job name/Part name	Q'ty	Remarks
9	Dowel pin/O-ring	3/2	
10	Lead holder	1	
11	Pickup coil	1	
12	Stator assembly	1	
13	Starter idle gear 2	1	
14	Starter idle gear 2 shaft	1	
15	AC magneto rotor	1	Refer to "REMOVING/INSTALLING THE AC MAGNETO ROTOR".
16	Starter wheel gear	1	
17	Woodruff key	1	
18	Bush/washer	1/1	
			For installation, reverse the removal procedure.

YFM660R(P) 2002 WIRING DIAGRAM

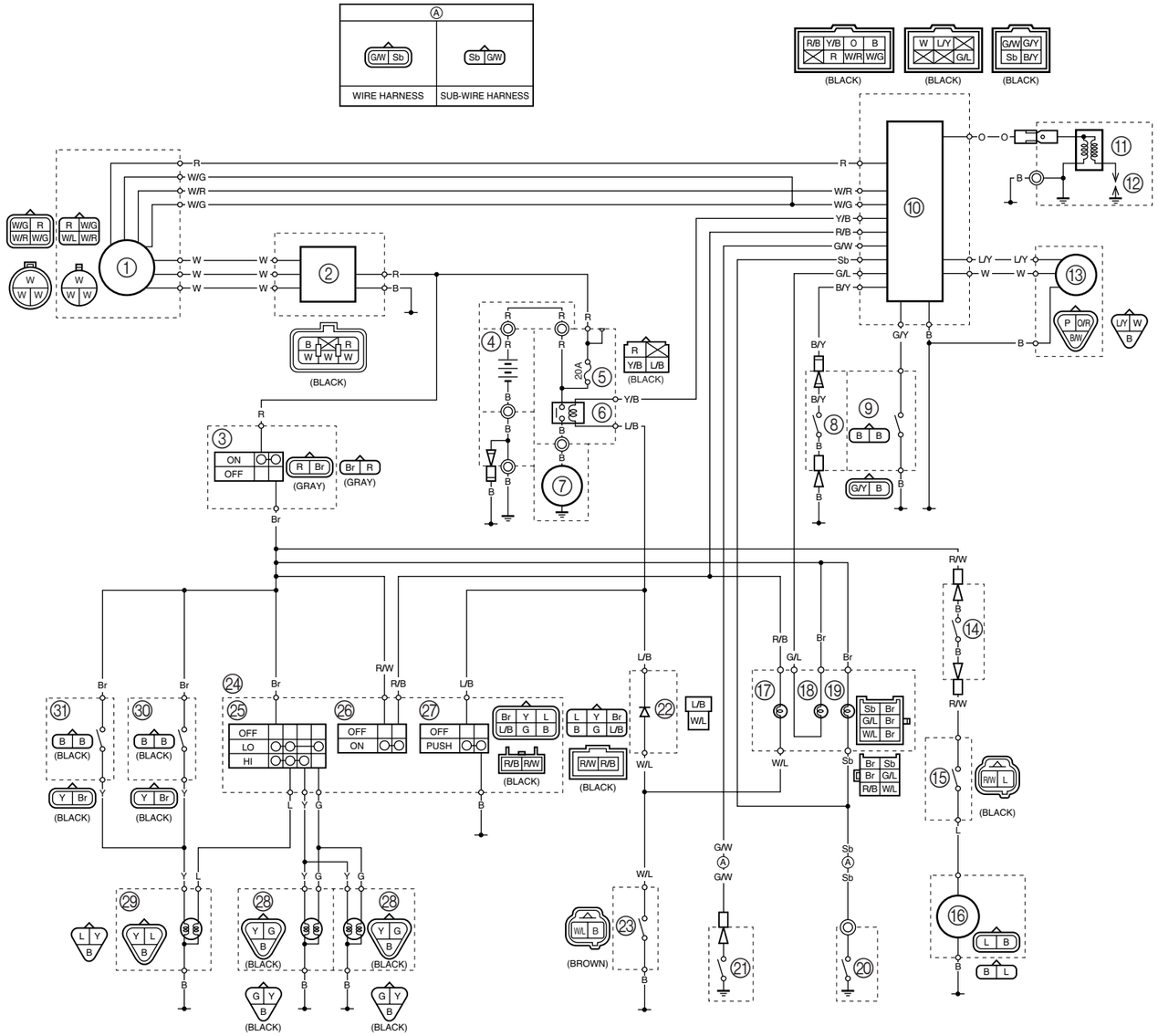

① AC magneto
② Rectifier/regulator
③ Main switch
④ Battery
⑤ Fuse
⑥ Starter relay
⑦ Starter motor
⑧ Clutch switch
⑨ Park switch
⑩ CDI unit
⑪ Ignition coil
⑫ Spark plug
⑬ Speed sensor
⑭ Circuit breaker (fan motor)
⑮ Thermo switch 1
⑯ Fan motor
⑰ Coolant temperature warning light
⑱ Reverse indicator light
⑲ Neutral indicator light
⑳ Neutral switch
㉑ Reverse switch
㉒ Diode
㉓ Thermo switch 2
㉔ Handlebar switch (left)
㉕ Lights switch
㉖ Engine stop switch
㉗ Start switch
㉘ Headlight
㉙ Tail/brake light
㉚ Rear brake switch
㉛ Front brake switch

COLOR CODE

B .....Black	W .....White	G/W.....Green/White	R/B..... Red/Black
Br.....Brown	Y .....Yellow	G/Y.....Green/Yellow	R/W..... Red/White
G.....Green	B/W.....Black/White	L/B .....Blue/Black	R/Y..... Red/Yellow
L.....Blue	B/Y.....Black/Yellow	L/G .....Blue/Green	W/B..... White/Black
O.....Orange	Br/L.....Brown/Blue	L/R .....Blue/Red	W/G..... White/Green
P .....Pink	Br/R .....Brown/Red	L/W .....Blue/White	W/L ..... White/Blue
R.....Red	Br/W.....Brown/White	L/Y .....Blue/Yellow	W/R..... White/Red
Sb .....Sky blue	G/L.....Green/Blue	O/R .....Orange/Red	Y/B..... Yellow/Black